# Installation Guide

These installation instructions are of a general nature and are designed to assist suitably experienced tradespeople to install Frontier™ Raft Acoustic Beam to a high standard in common applications.

For installation support, please contact your Autex Acoustics® account manager before you start.

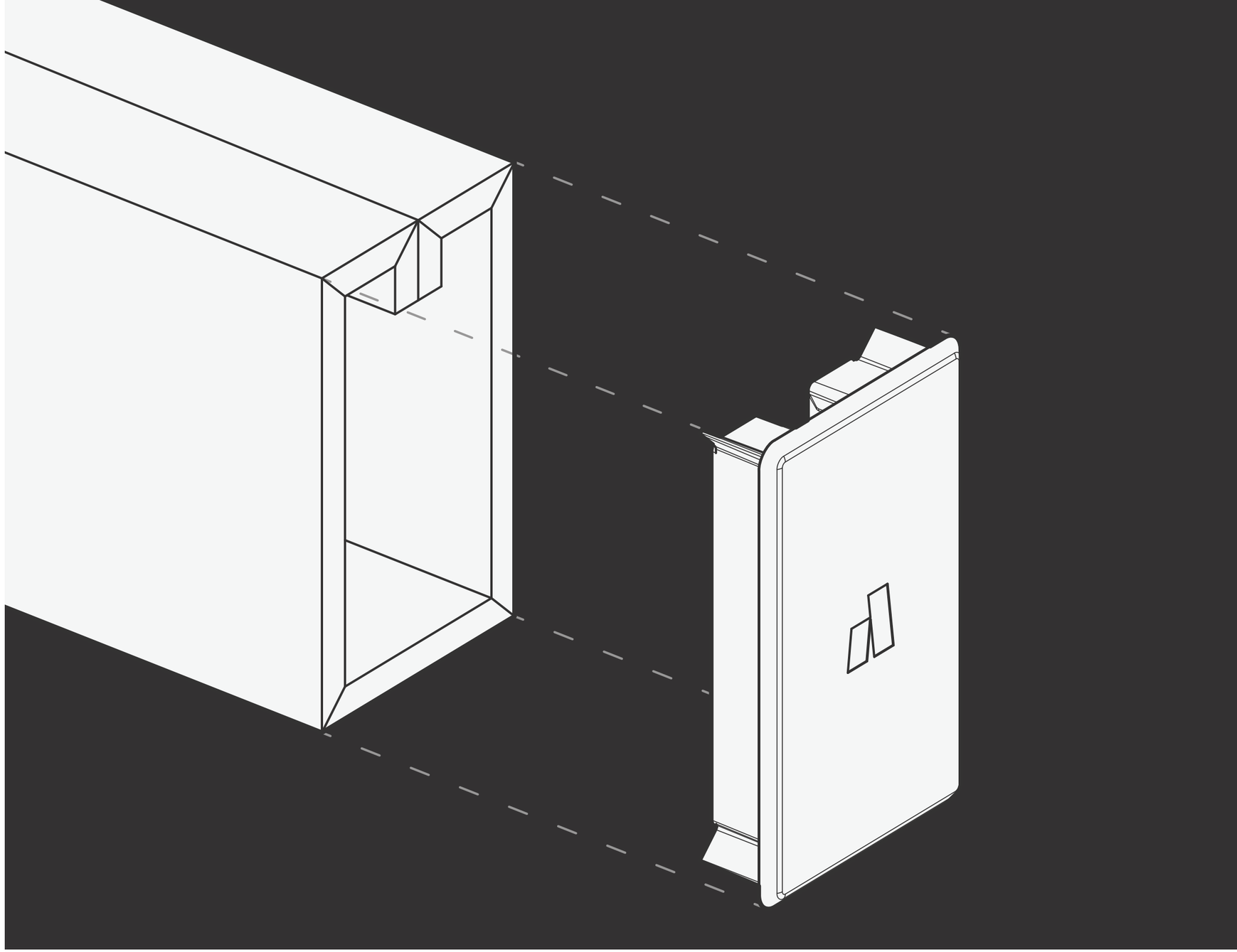

Autex Acoustics®

# Frontier™ Raft Acoustic Beam

# Contents


## 1. Preface

What are the pre-install details?

Page 3

## 2. Preparation and Handling

What are the preparation and handling details?

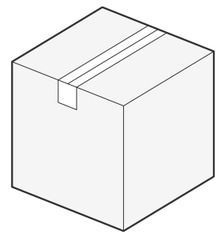

Page 3

## 3. Product Overview

What should you expect to arrive to site?

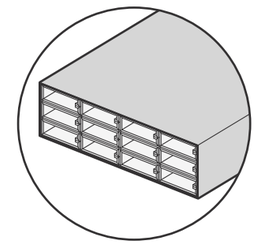

Page 4

## 4. Layout Planning

How do you plan your install?

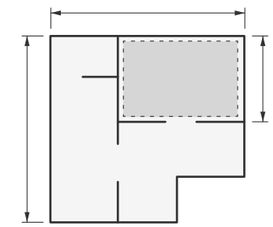

Page 5

## 5. Typical Install

What is the typical install process?

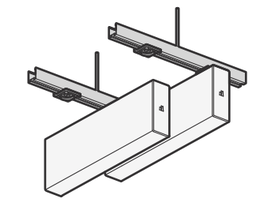

Page 7

## 6. Joining Modules

How do you join standard and extending modules?

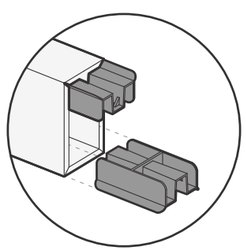

Page 10

## 7. Complex Install

How do you navigate complex installations?

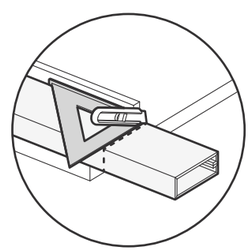

Page 12

## 7. Seismic Bracing

How do you brace the beams seismically?

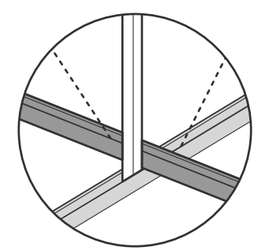

Page 15

## 8. Finishing Details

What details are recommended when finishing the installation?

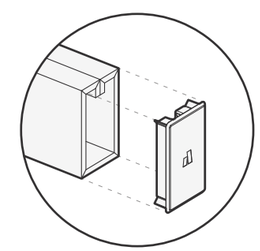

Page 18

## 9. Appendix

How do you identify parts and mounting methods?

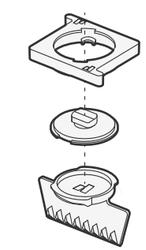

Page 19

These installation instructions are designed to assist suitable experienced tradespeople to install Frontier Raft to a high standard in common ceiling installations. For installation support, contact your Autex Acoustics® account manager before your start.

## Manufacturer's Documents

Autex Acoustics recommends that all persons engaged in the installation have full knowledge of the product and installation procedure as set out in the most recent edition of the manufacturer's instructions and related documents.

Manufacturer's documents relating to work in this section are:

- Frontier™ Raft Acoustic Beam Specification Guide
- Autex Acoustics Care and Maintenance Guide

Copies of these documents are available on request or from the Autex Acoustics website autexacoustics.co.uk

## Inspection

Before installing Frontier Raft check that the materials have been supplied as ordered and are free from damage or faults. Check product labels to ensure product has been supplied correctly.

It is important to check that all boxes are supplied from one batch. Due to batch-to-batch variations, we do not recommend installing different batch lots as this could result in colour variation.

Any variations must be reported to Autex Acoustics prior to commencing the installation. No claims will be accepted where the job continues with obvious faults, and no consultation with Autex Acoustics has taken place.

## Transportation, Storage, and Handling

Frontier Raft beams are supplied preassembled, they must be transported, stored, and handled with care to avoid damage.

Do not accept damaged beams. If product arrives damaged, note the condition on the freight documents and contact Autex Acoustics immediately. Goods signed as received in 'good condition' will not be the responsibility of Autex Acoustics. Always transport and store Frontier Raft on a flat, clean, dry surface. To prevent product damage, do not stack materials or place objects on top of boxes.

The use of Personal Protection Equipment is not required to handle Frontier Raft, though care must be taken to keep the job clean, and the use of cotton gloves is recommended.

## Site Preparation

The site conditions at time of installation should be clear of dust, debris, and foreign particles. Installation should only commence once the building is fully clad, water-tight, dry, and all wet processes have been completed.

## Service

For more information contact your Autex Acoustics account manager or visit our website autexacoustics.co.uk

# Product Overview

## Raft Beams and End Caps

Beams will arrive fully assembled in a box.
End Caps will arrive in separate packaging. It is up to the installer to finish beams with End Caps.

## Mounting Kits

All three parts of the mounting kit will be supplied in separate packaging, to be assembled during install. Check correct button is supplied depending on chosen mounting method.

## Mounting Method

Parts for specified mounting method will arrive in separate packaging. Check all parts for chosen mounting method have been supplied.

## Tools Required for Installation

Not supplied by Autex Acoustics.

Flat Head Screwdriver

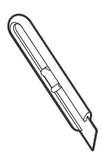

Knife

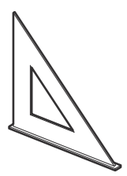

Set Square

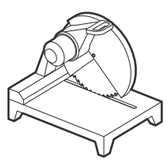

Aluminium Saw

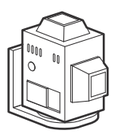

Laser Level

## Direct Fix Mounting Kit

## Channel Mounting Kit

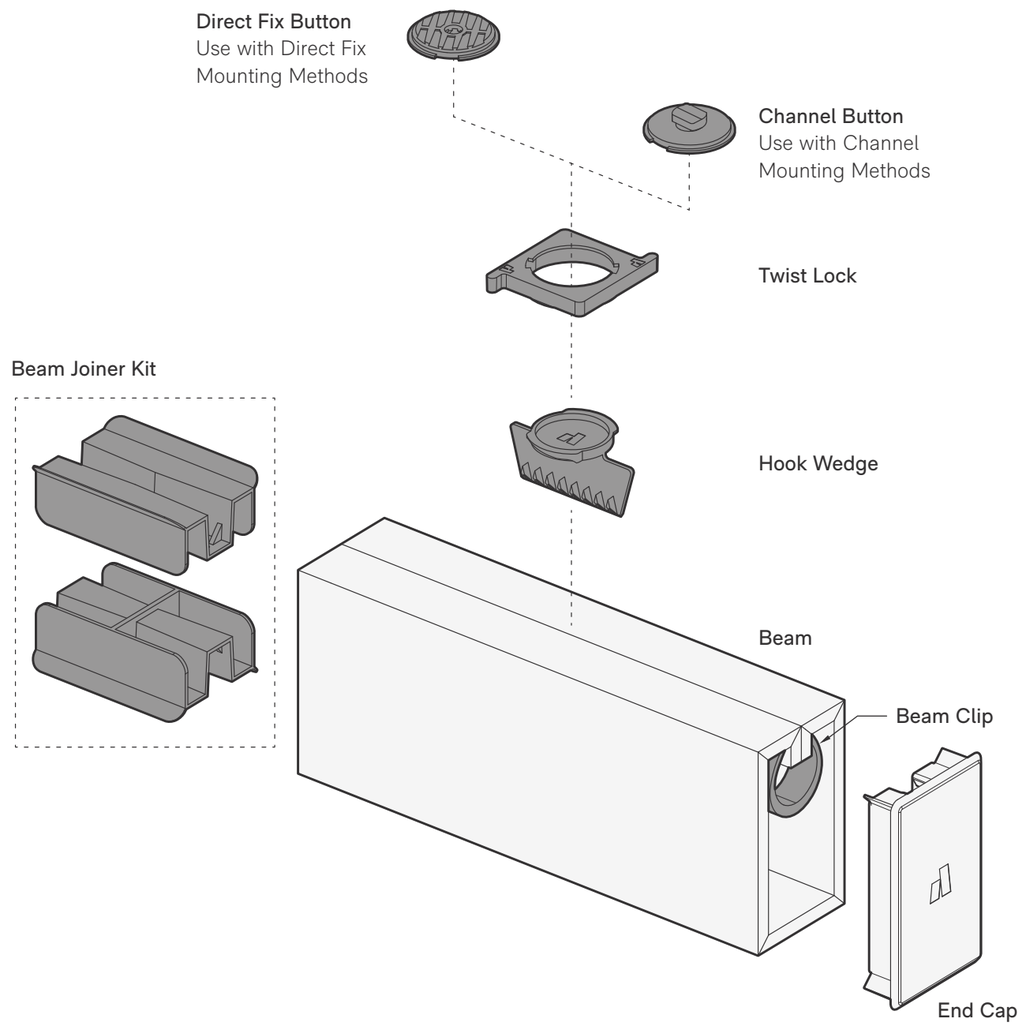


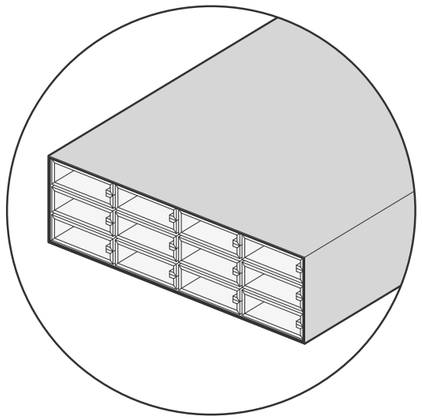

Pre-assembled Frontier Raft Acoustic Beams arrive in a box

# Beam Profiles and Spacing

- Available in three beam depths to suit a range of design requirements
- Each profile must be finished with colour-matched Frontier Raft End Caps
- Generally, beam spacing is to be equal to the beam height. Dimensions below show standard spacing for a 2400mm x 2400mm array
- Spacing can be managed on-site, ensure enough channels or cross rails are supplied to mount beams

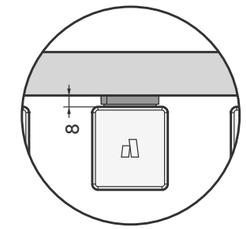


Twist Lock adds 8mm to the depth of the beam from the channel or substrate

## 50 x 55

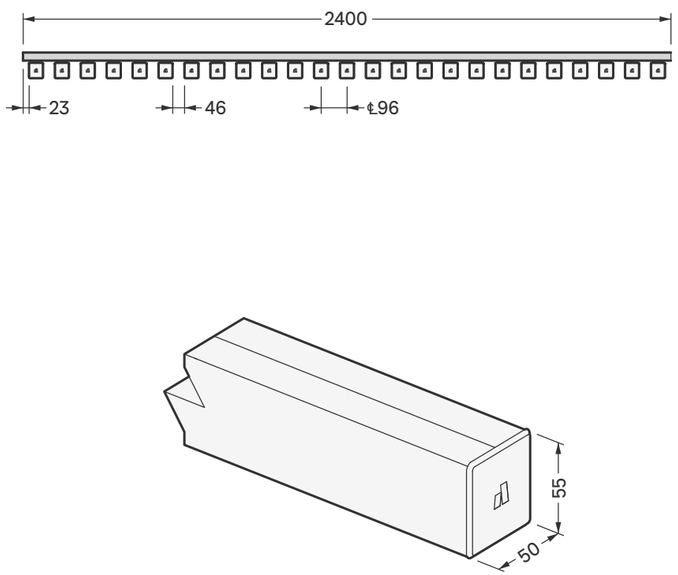


## 50 x 85

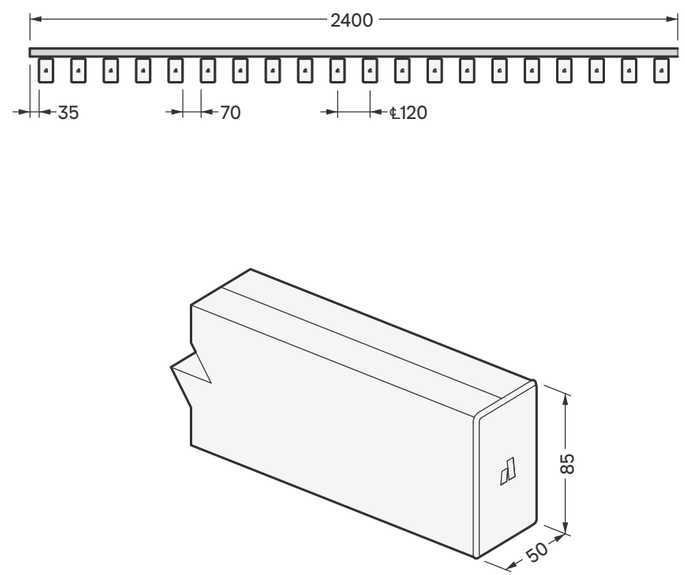


## 50 x 135

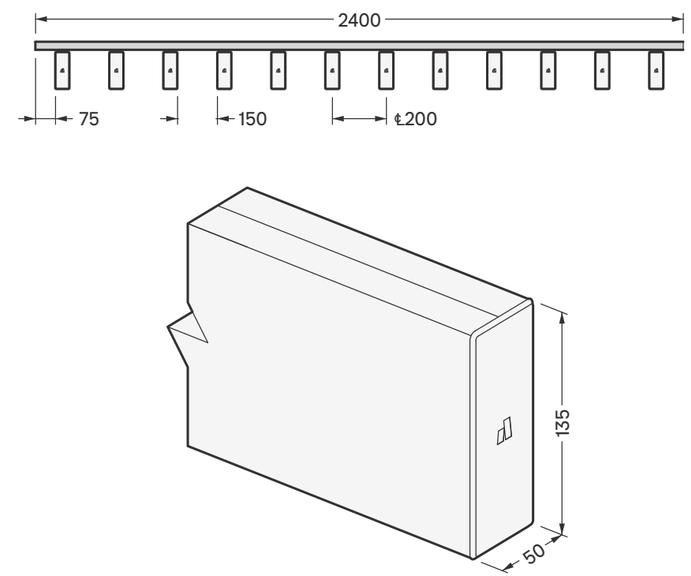

# Standard Arrays

## Standard and Extended Arrays

- When joining beams end to end, mounting spans can vary
- This diagram shows the standard spans for standard and extended modules for 2400mm long beams
- See page 10 for details on how to join modules

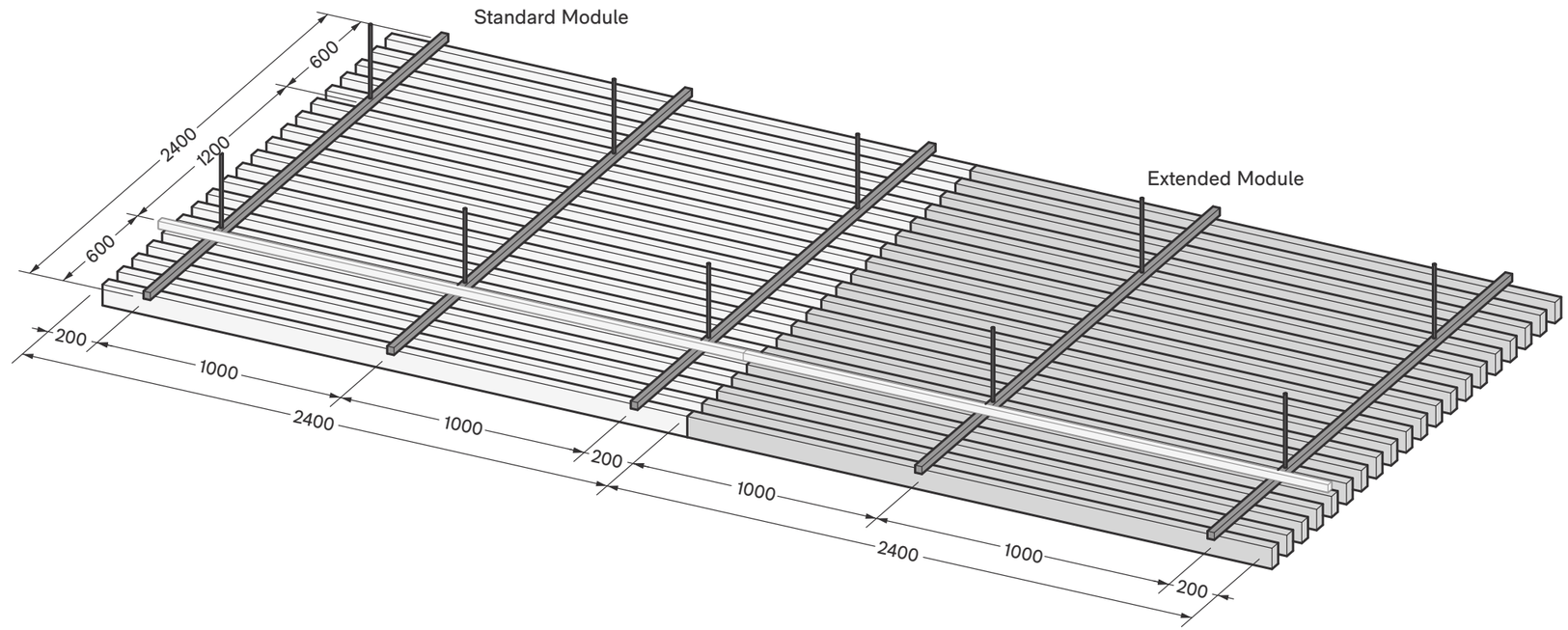


## Components Required

Tables show number of components needed for standard and extended modules, based on standard spacings. See Beam Profiles and Spacing page 5 for more details.

*For Low Profile or Suspended Mounting Methods
**For Suspended Mounting Methods

Standard Module

| Components | 50 x 55 | 50 x 85 | 50 x 135 |
|---|---|---|---|
| Beam | 25 | 20 | 12 |
| Mounting Kit | 75 | 60 | 36 |
| End Caps | 50 | 40 | 24 |
| Channel* | 3 | 3 | 3 |
| Suspension Kits** | 3 | 3 | 3 |

Extended Module

| Components | 50 x 55 | 50 x 85 | 50 x 135 |
|---|---|---|---|
| Beam | 25 | 20 | 12 |
| Mounting Kit | 50 | 40 | 24 |
| Joiners | 25 | 20 | 12 |
| Channel* | 2 | 2 | 2 |
| Suspension Kits** | 2 | 2 | 2 |

# Mounting Methods

## 1. Direct Fixed

Direct Fix Buttons can be used to mount directly to substrate or cable suspension.

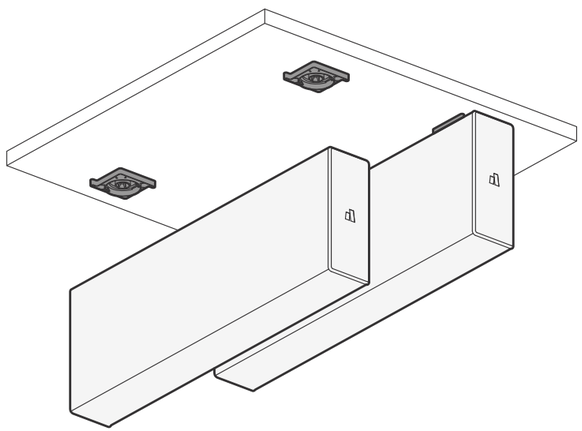

## 2. Low Profile Rails

Low Profile Rails are ideal for direct fixing to substrate using rails.

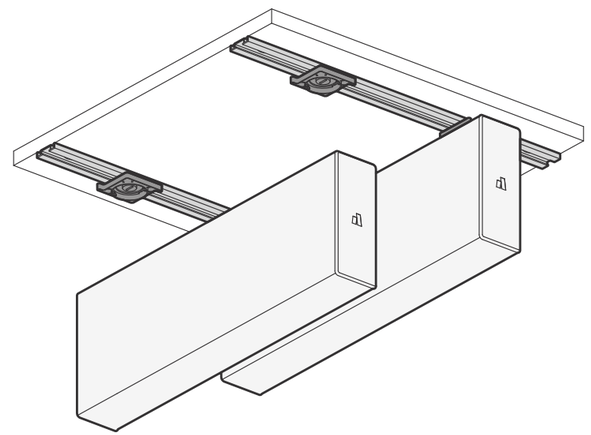

## 3. Suspended Cross Rails

For suspended installations it is strongly recommended to consult a Building Engineer for seismic considerations. See page 15 for seismic information.

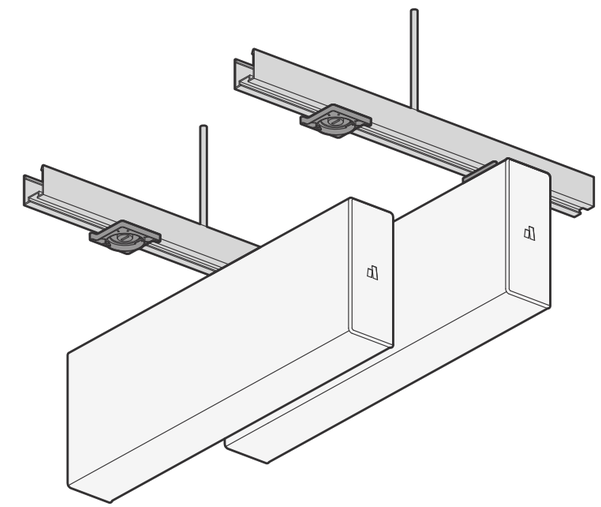

Note: Step 1 and 2 of the typical install steps must be followed sequentially to ensure the beams are secured on the mounts.

For all installations in sprinklered buildings, consult a Fire Engineer to ensure the intended position of the Raft Beams meet sprinkler and alarm standards. Further detail on the fire standards can be found in the supplemental document Fire Considerations for Frontier.

# 1. Fixing Mounts

## Direct Fix

Mark out your ceiling at the recommended spacing ℄ for your chosen beam depth. Screw the Direct Fix Mount into the ceiling using screws* suitable for the substrate.

If using Cable Suspension method, follow same process when fixing mounts.

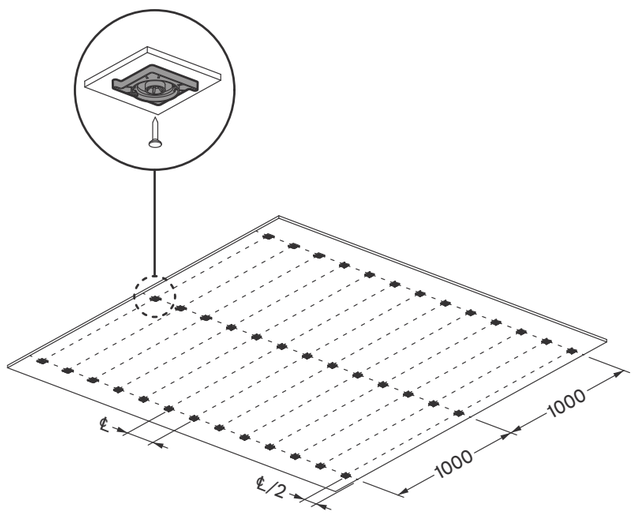


## Low Profile Channels

Mark out the ceiling and screw in cross rails at specified centres using screws* suitable for the substrate every 550mm, starting 100mm from the end of the channel.

Mounts can be fixed before installing cross rails. Alternatively, when rails are installed, begin fixing mounts at desired spacing using a flat head screwdriver.

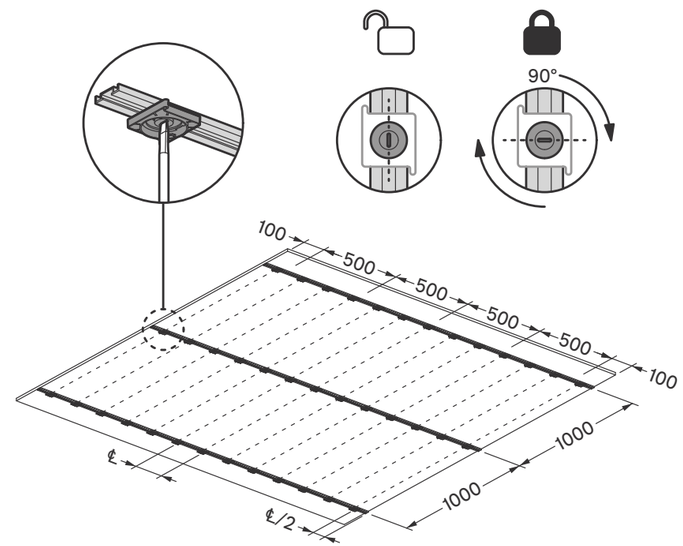


## Suspended Channels

Mark out the substrate and fix suspension points, using chosen suspended system. Ensure suitable fasteners* are used for the substrate.

Once cross rails are fixed on suspension points, fix cross brace to cross rails.

Mounts can be fixed before installing cross rails. Alternatively, when rails are installed, begin fixing mounts at desired spacing using a flat head screwdriver.

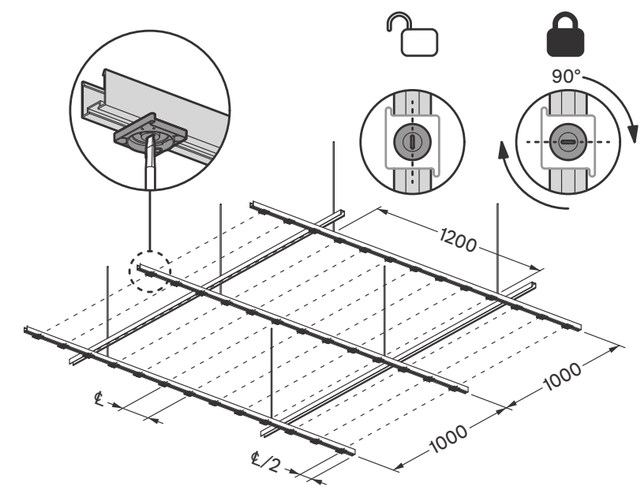


## Spacing

When installing mounts, the slot can be used for laser alignment, and a spacer block can be cut onsite to position subsequent mounts.

Table and diagram to the right show how to set the measurement of your spacer:

- If 'Beam Spacing' has been specified, then the Spacer = Beam Spacing + 10mm
- If 'Centres' have been specified, then the Spacer = ℄ - 40mm

If installing standard 2400mm x 2400mm arrays, then each beam profile should match these corresponding spacers (shown in table).

*Components not supplied by Autex Acoustics

| Beam Depths | Beam Spacing | ℄ | Spacer |
|---|---|---|---|
| 50 x 55 | 46 | 96 | 56 |
| 50 x 85 | 70 | 120 | 80 |
| 50 x 135 | 150 | 200 | 160 |

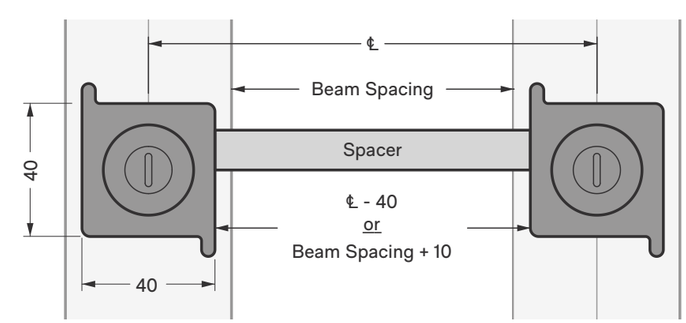

# 2. Fixing Beams

## 1. Hook Wedge

Push Hook Wedge into the beam seam.

The Hook Wedge can be shifted when inside beam to align with fixed mount when installing beams.

Do not pull out Hook Wedge once inserted in beam. If it needs to be removed, slide it out the end of the beam.

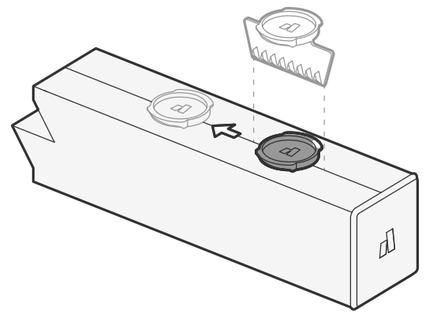

## 2. Fixing Beams

Lift beam up to Twist Lock, and align Twist Lock and Hook Wedge.

Ensure Twist Lock is set to 'unlocked' position. The tabs on the Twist Lock should be visible, and running perpendicular to the direction of the beam.

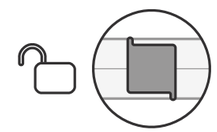

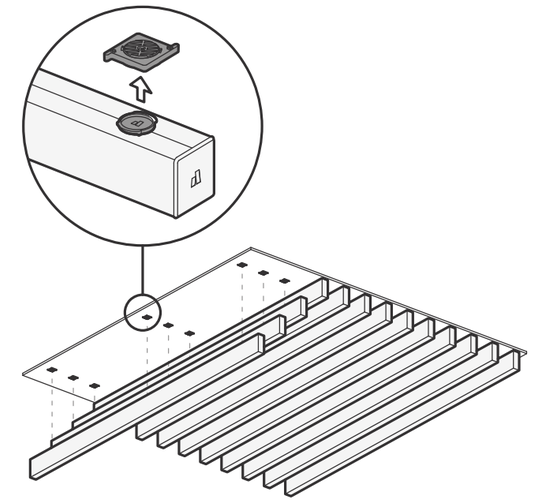

## 3. Half Locking

Half locking allows the beam to be fixed to the mount, but laterally shifted if needed.

When Twist Lock and hook wedge are aligned, turn the Twist Lock 45 degrees clockwise from underneath to half lock the beam in place.

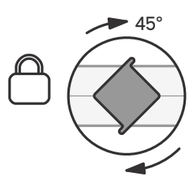


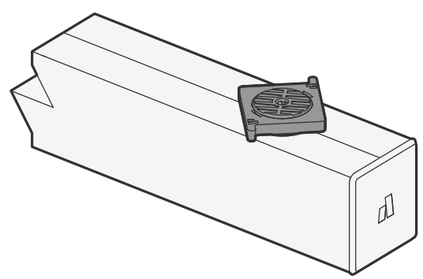

## 4. Locking

When you are satisfied with the alignment of the Raft Beams, turn the Twist Lock 90 degrees clockwise from underneath so the beam is locked in place.

The tabs on the Twist Lock will not be visible when locked.

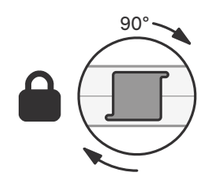


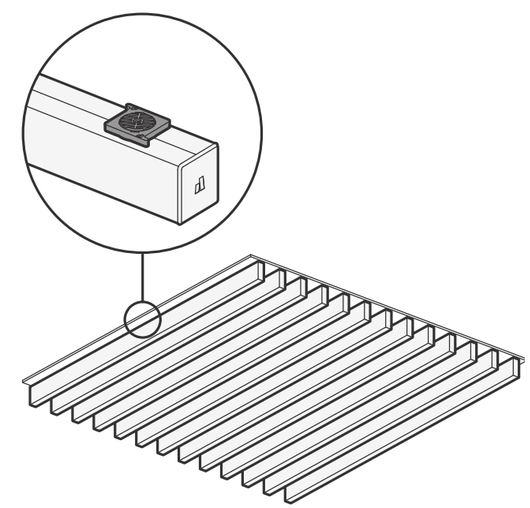

Note: Follow same process when fixing to rails.
These instructions are also suitable for wall installation.

# Joining Beams

- The Beam Joiner Kit consists of 2 joiners
- Beam joiners are designed to fit all beam sizes
- Ensure to fit to top and bottom of beam join
- When joining beams, offset Hook Wedge 50mm from desired location. This allows beam to be half locked and slide onto the joiner

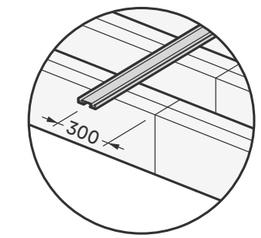


No more than 300mm overhang from channel to join

## 1. Insert Joiner

Once first beam is locked in position, insert joiners into the top and bottom of join end. Push joiners in half way and lock off first beam.

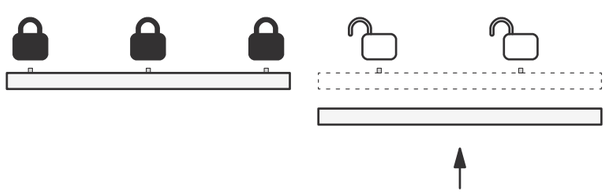

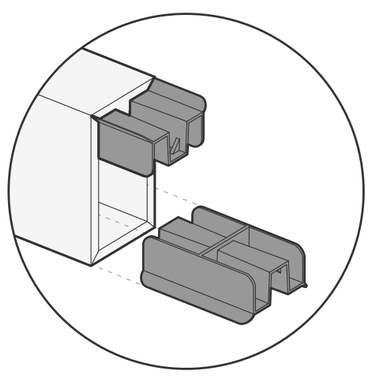

## 2. Align Beams

Fix second beam to mounts and half-lock to allow beam to side into join. Alternatively, a second person can assist.

Tip: Pinch bottom of first beam when joining.

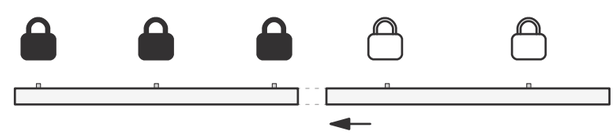

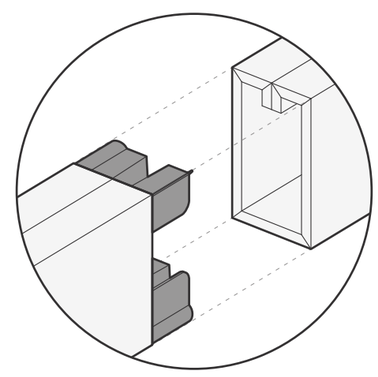

## 3. Lock Beams

Once joined, lock off second beam.
Repeat for all joining beams.

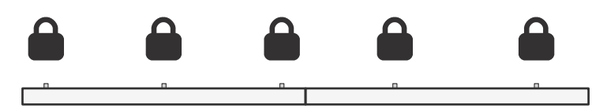

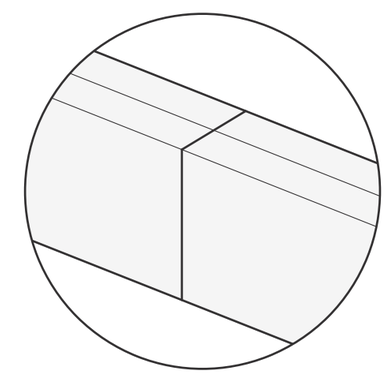

# Joining Channels

## 1. Insert Joiner

To join suspended rails, use the Lateral Aluminium Joiner to hold the channel together.

Insert Lateral Joiner into end of channel that is to be joined.

It is best practice to insert joiner before the channel is suspended from ceiling.

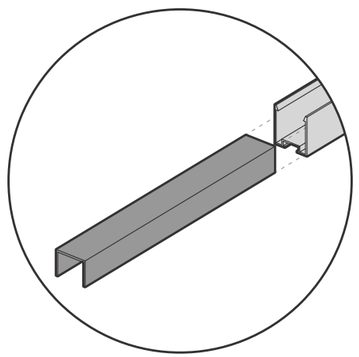

## 2. Fixing Joiner

We recommend 4 x 8G 16mm Tek Screws* to fix the rails together.

Using 2 x 8G 16mm Tek Screws* fix the joiner into the channel.

Once completed, fix channel to suspension points.

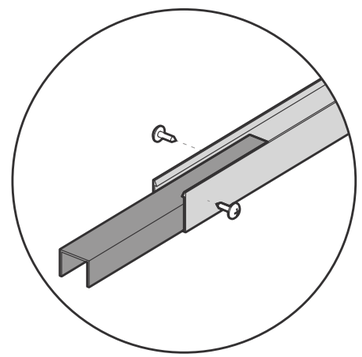

## 3. Joining Channels

Once the joiner is fixed in the first channel and has been suspended, fix the second channel to suspension points and slide the second channel onto the joiner.

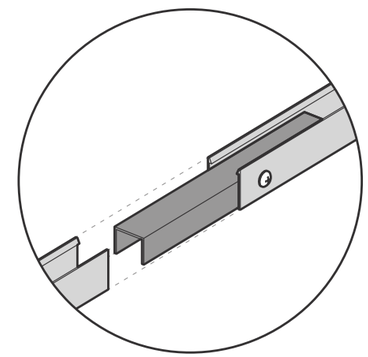

## 4. Securing Join

When the join is pulled tight together, screw fix the remaining 2 x 8G 16mm Tek Screws* through the second channel to hold the join together.

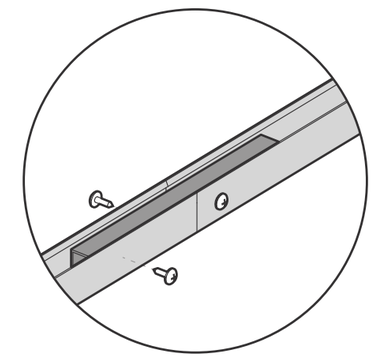

## Aluminium Lateral Joiner

When installing arrays with end-to-end channel joins, it is recommended to use an aluminium channel to secure the join.

Channel not supplied by Autex Acoustics, use the following dimensions to source channel. Channel lengths will need to be cut-on-site.

*Components not supplied by Autex Acoustics

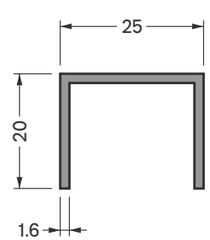


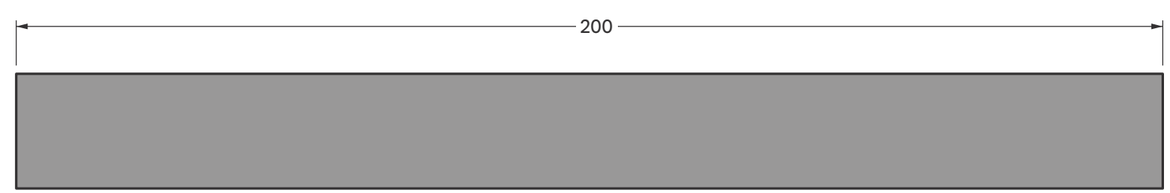

# Cutting Beams

- Beams can be cut with a sharp, fine tooth drop saw blade. Ensure the blade is only used to cut beams to maintain a sharp blade
- Alternatively, use the steps below to cut the beams with a sharp knife

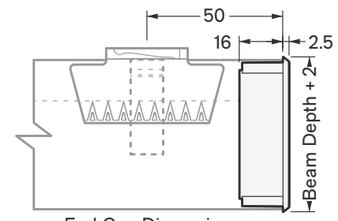

End Cap Dimensions

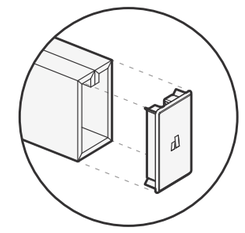

All cut-on-site ends must be finished with an End Caps, ensuring all beam joins have a factory finish

## 1. First Cut

Before cutting, check the seam for a beam clip using a thin, flat object. If a clip is present, press it down until released.

When cutting beams on-site, cut on a flat surface with a square back-stop, using a set square and a sharp knife.

Cut along the long edge of the beam first, toward bottom of the beam.

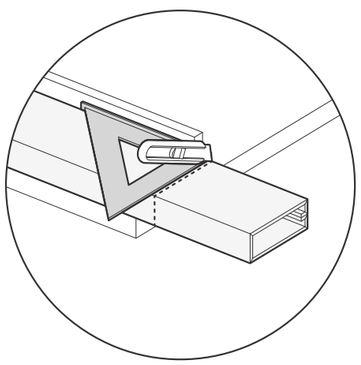

## 2. Second Cut

Shift the set square to the bottom of the beam (visible edge) and cut down along this edge.

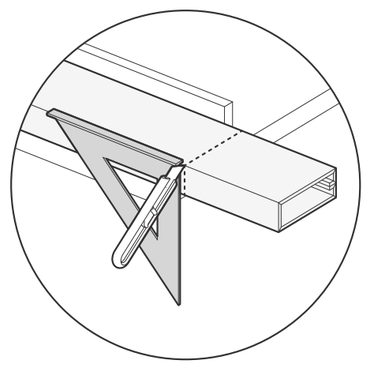

## 3. Flip Beam

Rotate the beam 180 degrees and cut along the set square. Shift the set square to the top of the beam and continue until the beam has been fully cut.

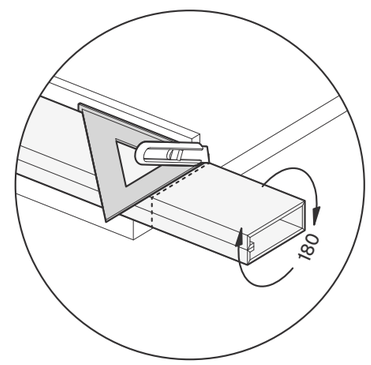


## 4. Replacing Clip

Insert a clip from the beam offcut into the end of the beam to seal beam seam.

If there is no clip in within 50mm from the end of the beam, insert a clip from offcut.

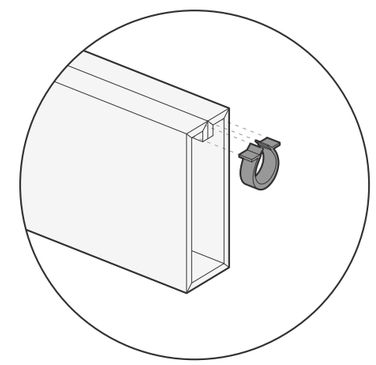

# Access Hatches - Direct Fix

- When specifying direct fix beams with a hinged access hatch door, use the guides below
- If your access door is not hinged, use the same rules below. When accessing hatch, ensure to remove all beams
- Removable beams can not be joined end-to-end

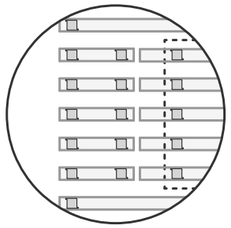

If the adjacent beams to the hatch detail do not have at least two mounting points, another mounting point will be required

## Hatch Dimensions

Access hatch doors are commonly 600mm x 600mm. Position and size may vary, but use the following rules to apply to each beam installation.

| | |
|---|---|
| A. Hatch Width | |
| B. Hatch Length | |
| C. Mounting Span | (Hatch Width) - 100mm |
| D. Beam Clearance | 25mm |
| E. Hatch Overhang | Min: 100mm, Max: 300mm<br>To ensure that the adjacent beams are not knocked when the hatch is in use |
| F. Beam Overhang | Min: 50mm, Max: 300mm |

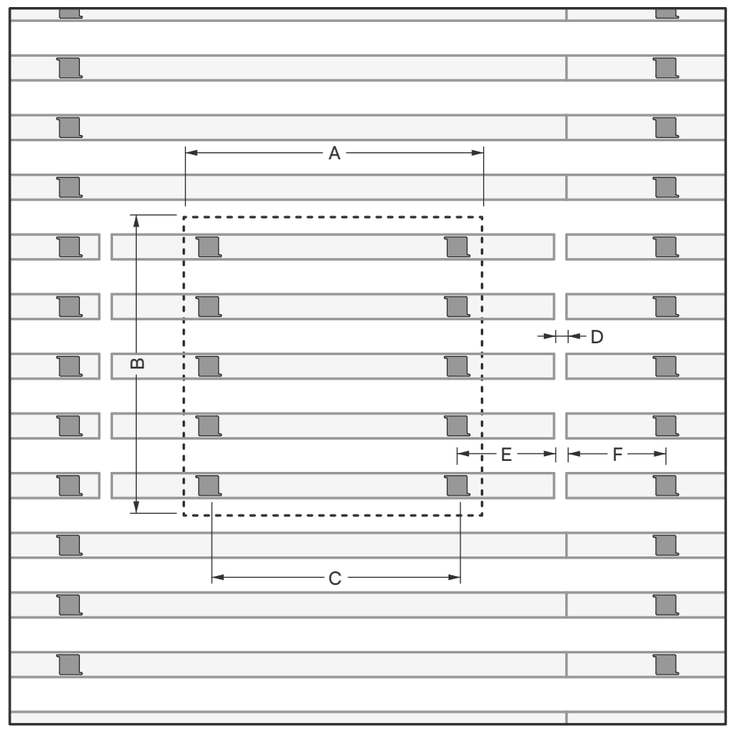


## Installing Hatch

### 1. Installing Hatch Mounts and Beams

Using the hatch dimension rules, fix mounts to substrate, ensuring the mounts are in line with 'fixed' beam mounts.

Install beams using mounts install process, and check clearance is equal on both sides of hatch beam.

## Removing Hatch

### 1. Removing Beams

In order to avoid beam clashes when opening an access hatch, you must remove the the first and second beam closest to the hinge.

Refer to Installation Guide page for more details on how to remove beams to access hatch door.

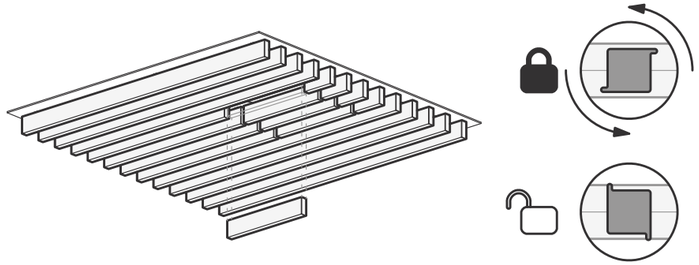

### 2. Open Hatch Door

Once beam is removed, hatch door can be opened. Ensure beams are re-installed with the correct beam clearance on either side.

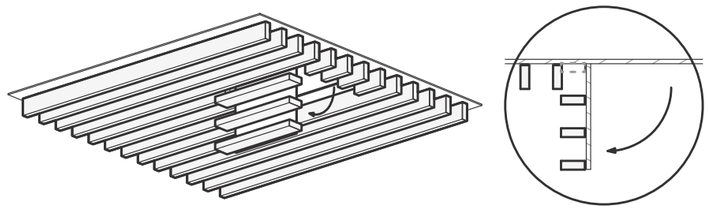

# Access Hatches - Suspended

- When specifying suspended beams with a access hatch door, use the guides below
- Access Hatch doors are commonly 600mm x 600mm Position and size may vary. If hatch access needs to be larger than a mounting span, make individual beams removable
- Removable beams can not be joined end-to-end

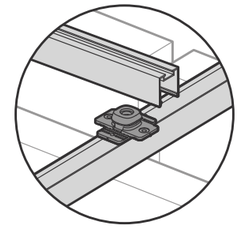

Cross Rail Connector
2 x Floating Panel Connectors are screwed together with an 35mm M6 CSK Screw and Nut (A)

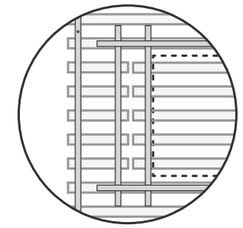

If the adjacent beams to the hatch detail do not have at least two mounting points, another mounting point will be required

## Hatch Dimensions

| | |
|---|---|
| A. Hatch Width | |
| B. Hatch Length | |
| C. Mounting Span | (Hatch Width) + 50mm |
| D. Beam Clearance | 25mm |
| E. Hatch Overhang | B + Distance to parallel Beam<br>Conceal channel above this Beam |
| F. Beam Overhang | 25mm |
| G. Hatch Overhang | Min: 50mm, Max: 300mm<br>To ensure that the adjacent beams are not knocked when the hatch is in use |
| H. Beam Overhang | Min: 50mm, Max: 300mm |

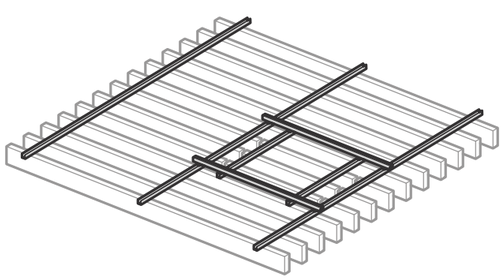

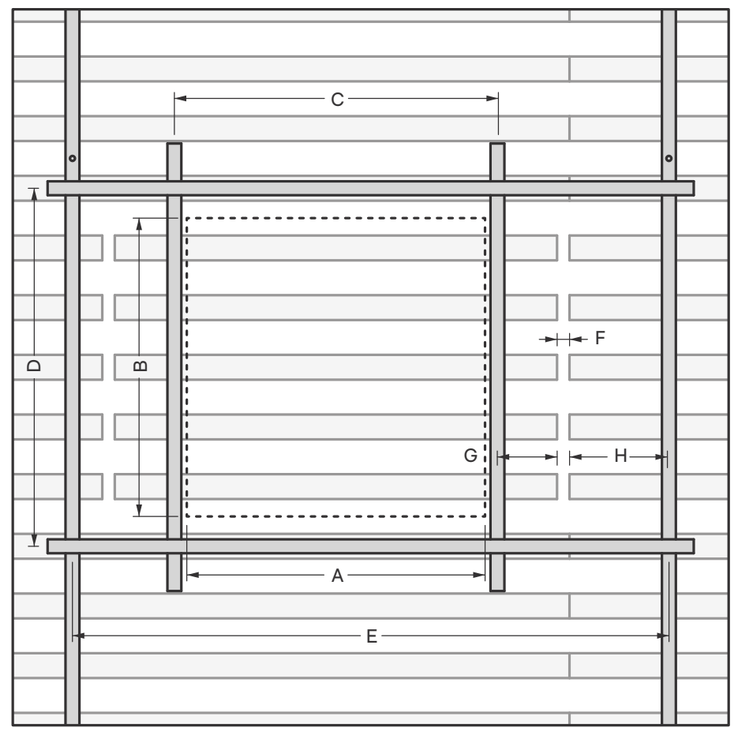


## Installing Hatch

### 1. Installing Hatch Rails

Using the Cross Rail Connector, fix cross rails together at every rail intersection, ensuring the orientation of the connector is parallel to the channel it is connected to.

### 2. Installing Beams

Fix mounts to the mounting kit running parallel to the 'fixed' channels', ensuring the 'hatch' mounts line up with the 'fixed' mounts.

Install beams using mounting kit install process, and check clearance is equal on both sides of hatch beam.

## Removing Hatch Beams

### 1. Removing Beams

Remove all beams to access the hatch door.
Ensure beams are re-installed with the correct beam clearance on either side.

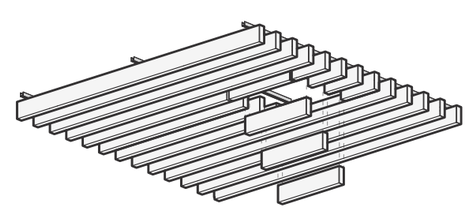

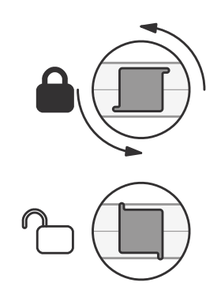

# Seismic Bracing Overview

The seismic bracing arrangement shown has been developed in consultation with a seismic engineer and is provided as a seismic design guide only. Final seismic bracing requirements must be determined by the project seismic engineer.

**1. Seismic Brace** — Diagonal braces to fix to primary and secondary directly. Do not fix to only one member.

Place each seismic brace at the intersection of the primary and secondary rails. Use the below locations for tested seismic bracing.

**2. Secondary Rail** — Secure secondary rails at a maximum spacing of 2400mm across primary rails. See the Seismic Layouts on page 16 for more details.

**3. Beam Mounting Location** — Beam mount must be positioned inside a beam clip.

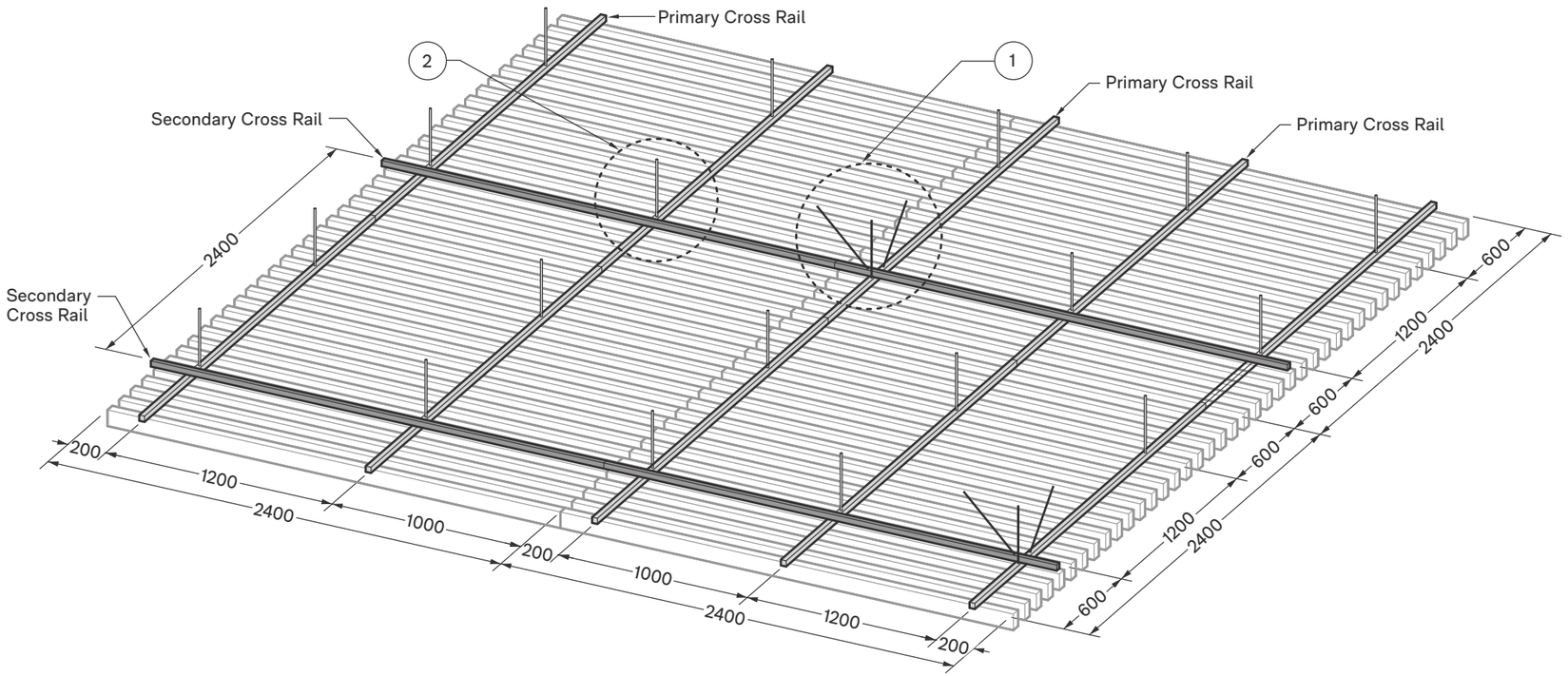


Detail 1

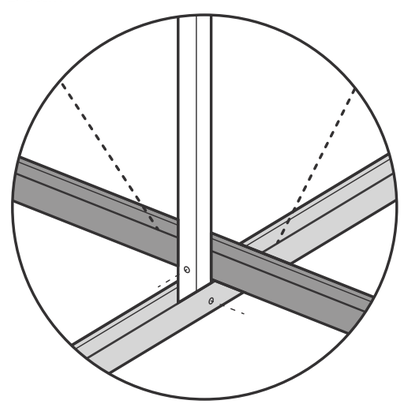

Detail 2

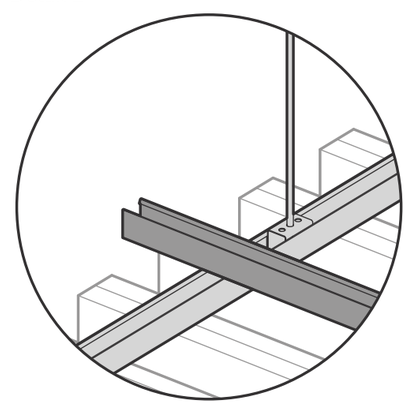

Detail 3

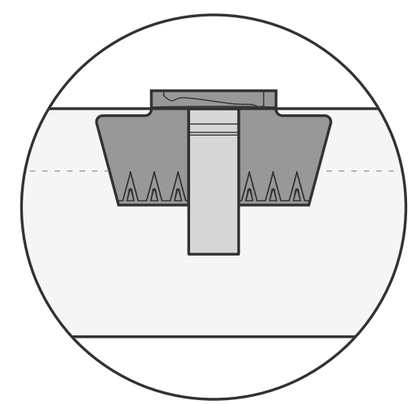

Note: 100mm minimum clearance around building structure

# Seismic Layouts

## Bracing Layout

The seismic bracing arrangement shown has been developed in consultation with a seismic engineer and is provided as a typical design guide only. Final seismic bracing requirements must be determined on a site specific basis by a qualifies engineer.

Use the below layouts for tested seismic bracing. Refer to seismic engineering report for more information.

- Seismic Bracing
- Primary Cross Rail
- Secondary Cross Rail

| Horizontal Seismic Action | Config. 1 Brace Distance | Config. 2 Brace Distance |
|---|---|---|
| 0.5 G | 36.0m | 36.0m |
| 1.0 G | 16.8m | 16.8m |
| 1.5 G | 12m | 12m |
| 1.65 G | 9.6m | 9.6m |
| 2.5 G | Not Permitted | 7.2m |
| 3.3 G | Not Permitted | 4.8m |

Config. 1

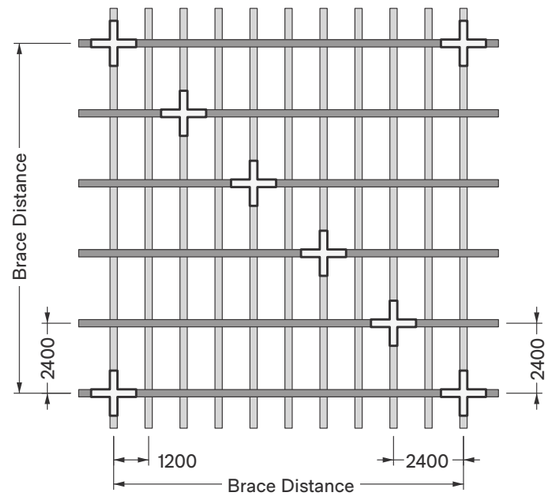


Config. 2

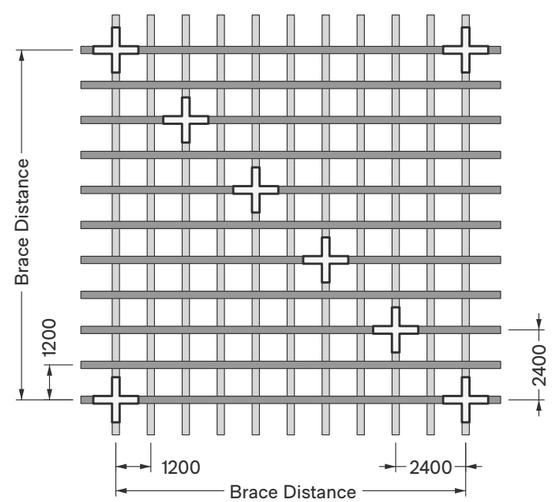


## Brace Details

Place each seismic brace at the intersection of the primary and secondary rails.

Vertical brace must fix to both primary and secondary rails.

Each diagonal brace must independently fix to primary and secondary rails. Do not fix to only one member.

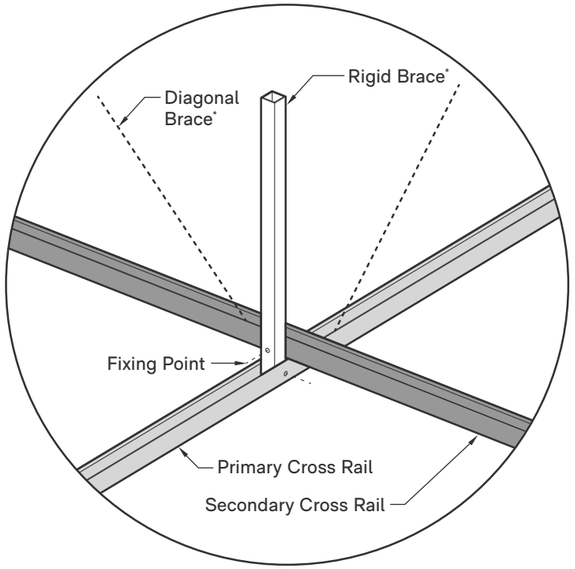


*Components not supplied by Autex Acoustics

# Secondary Rails

## Bracing Layout

- When fixing Secondary Rails to Primary Rails, we recommend fixing the channels with an M6 Nut and Hex Bolt (not supplied by Autex Acoustics)
- Use the following instructions in conjunction with the Seismic Layouts on page 16
- For more details, contact your Autex Acoustics account manager

## 1. Drill Holes

Drill out holes for bolt on both the Primary and Secondary Rails before fixing to suspension points. For the Primary Rail, drill holes as per the mounting span dimensions where the brace will sit. On the Secondary Rail, drill holes 100mm from suspension points.

When Primary Rails have been installed, sit Secondary Rail above suspended channel, 100mm from suspension points, lining up with pre-drilled holes. See Seismic Layouts page 16 for more details.

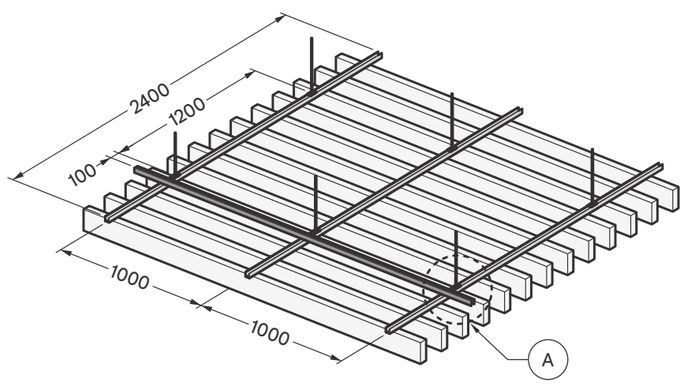


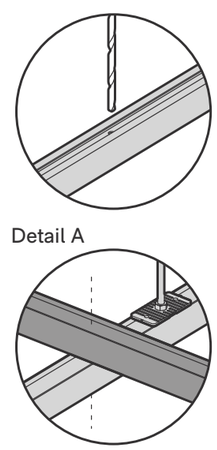


## 2. Position and Fix Bracing

Use 45mm M6 Hex Bolt to thread up through primary rail, and secondary rail. Ensure bolt head is oriented inside channel.

Fix with 10mm M6 Washer and an M6 Nylock Nut.

Repeat for every intersection of primary and secondary rail. Where end to end secondary rails are joining, use Lateral Joiner to fix channel together. See Joining Channels page 11 for more details.

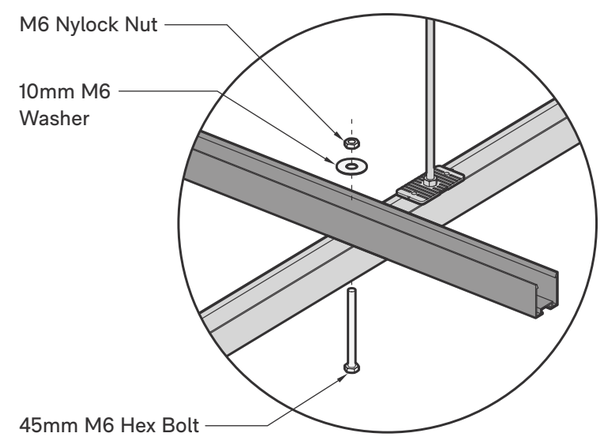


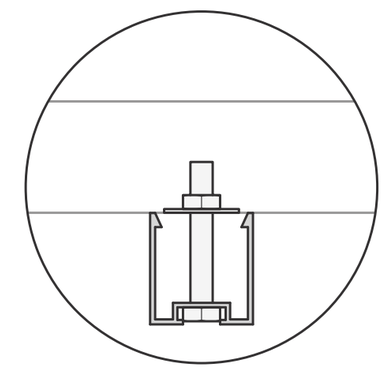

# Finishing Details

## End Caps

Beam ends must be finished with colour-matched Frontier Raft End Caps.

When cutting on site, cut edge must be finished with an End Cap to ensure all beam ends have a factory finish.

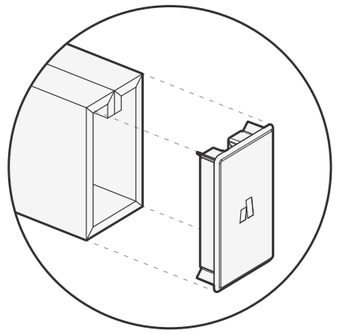

## Lighting

We recommend lighting sits flush with the base of the beam, and is suspended separately to the Raft Beam system.
See Installation Guide and Lighting Guide for more details.

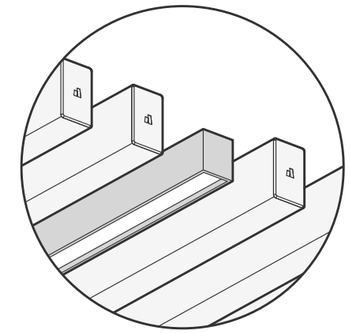

## Sprinklers and Smoke Detectors

For all installations in sprinklered buildings, consult a Fire Engineer to ensure the intended position of the Frontier Raft beams meet sprinkler and alarm standards. Further detail on the fire standards can be found in the supplemental document Fire Considerations for Frontier.

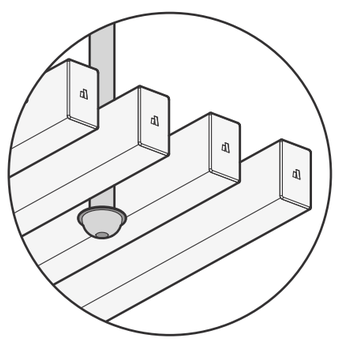

## Services

Services such as air conditioning and vents should sit flush with the bottom of the beam. It is recommended that there is at least 100mm clearance around these obstacles.

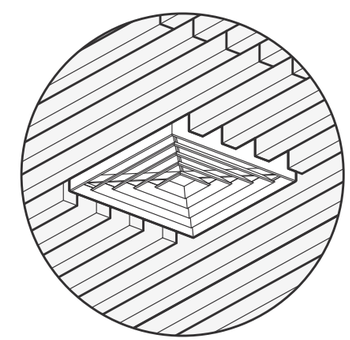

# Assembly Details

## Direct to Substrate Fixing Detail

| Substrate | Fixing | Minimum Embedment |
|---|---|---|
| Concrete | Hilti-HUS3-HR6 | 40mm |
| Steel | 8G Tek Screw | 0.55mm |
| Timber | 8G Wood Screw | 30mm |

Note: Select fixing type to suit environmental and structural requirements.

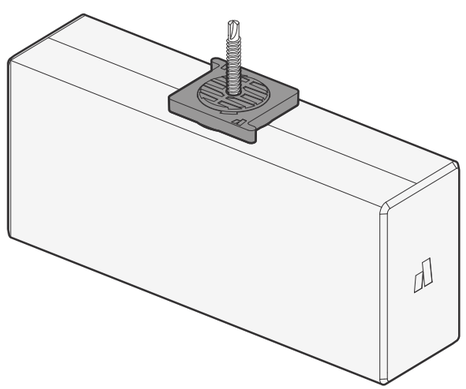

## Exploded View

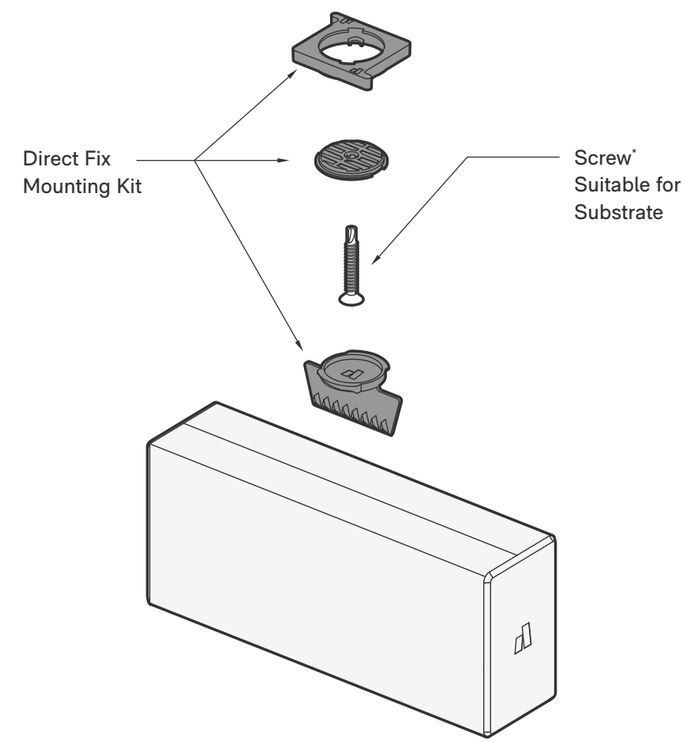


*Components not supplied by Autex Acoustics

# Assembly Details

## Low Profile Channel to Substrate Fixing Detail

| Substrate | Fixing | Minimum Embedment |
|---|---|---|
| Concrete | Hilti-HUS3-HR6 | 40mm |
| Steel | 8G Tek Screw | 0.55mm |
| Timber | 8G Wood Screw | 30mm |

Note: Select fixing type to suit environmental and structural requirements.

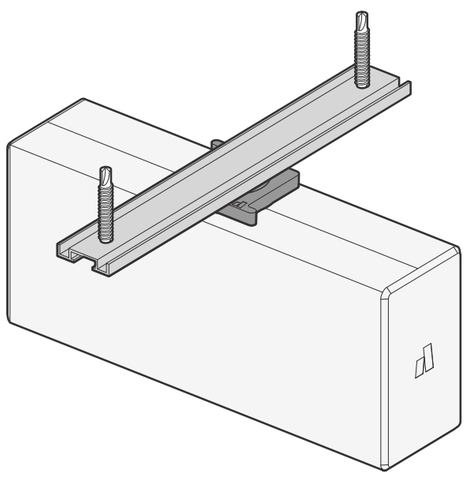

## Exploded View

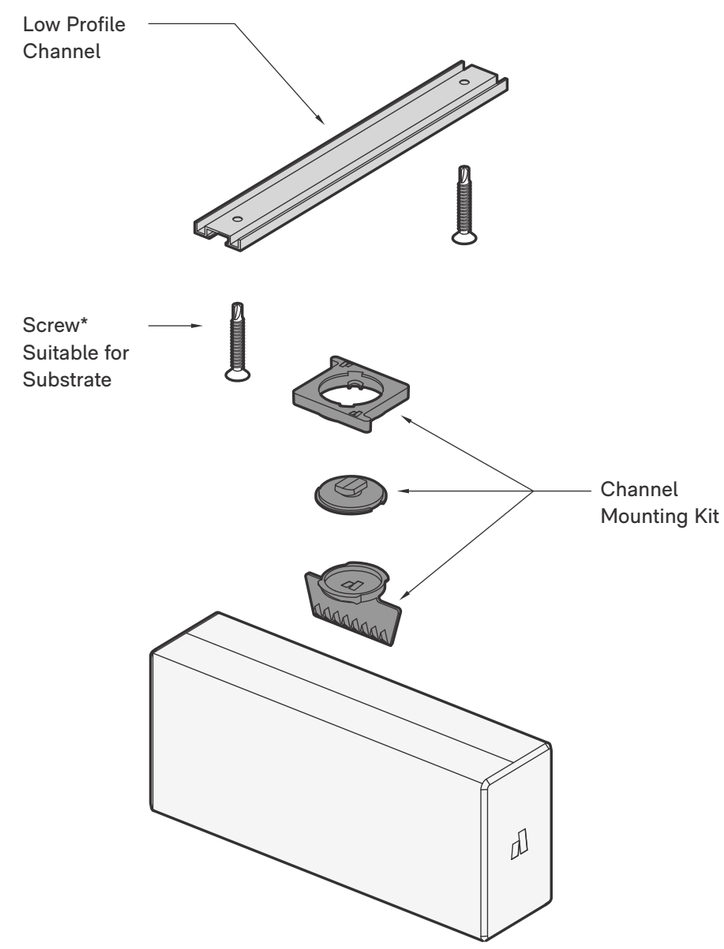


*Components not supplied by Autex Acoustics

# Assembly Details

## Threaded Rod Suspension to Cross Rail

| Substrate | Fixing | Minimum Embedment |
|---|---|---|
| Concrete | Hilti-HUS3-HR6 | 40mm |
| Steel | 8G Tek Screw | 0.55mm |
| Timber | 8G Wood Screw | 30mm |

Note: Select fixing type to suit environmental and structural requirements.

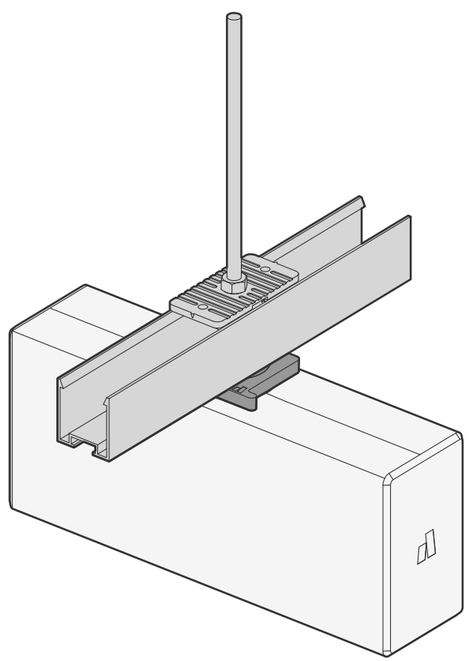

## Exploded View

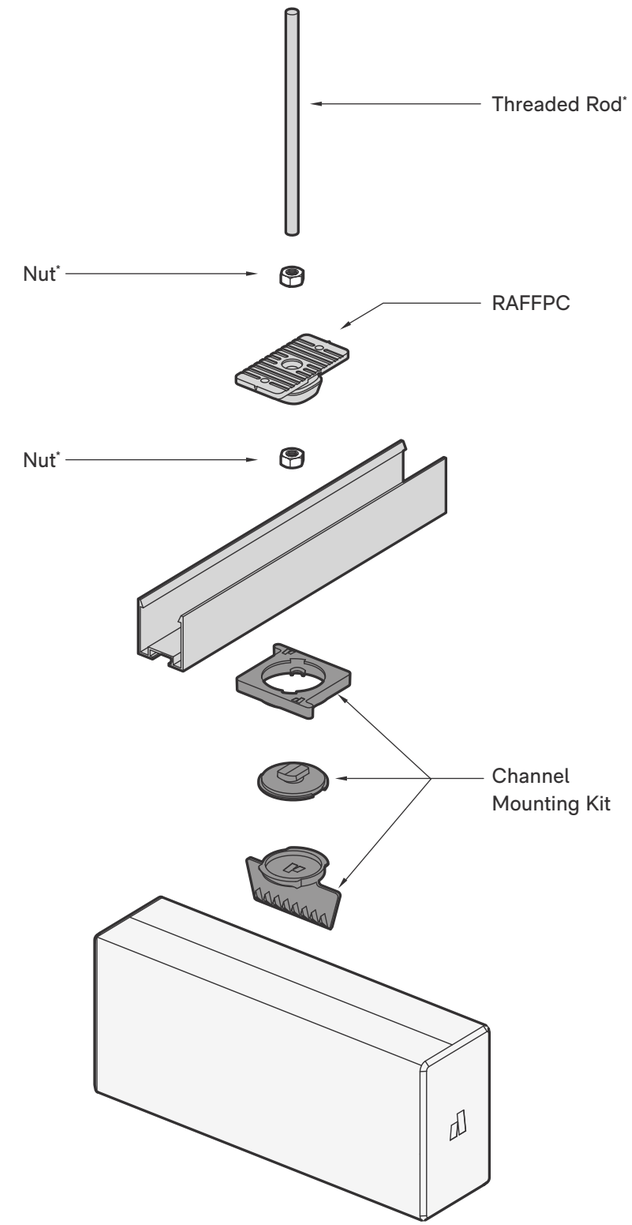


Note: For certain size installations, transverse and longitudal seismic bracing may be required. See suggested bracing options on page 15

*Components not supplied by Autex Acoustics

# Assembly Details

## Cable Suspension to Cross Rails

| Substrate | Fixing | Minimum Embedment |
|---|---|---|
| Concrete | Hilti-HUS3-HR6 | 40mm |
| Steel | 8G Tek Screw | 0.55mm |
| Timber | 8G Wood Screw | 30mm |

Note: Select fixing type to suit environmental and structural requirements.

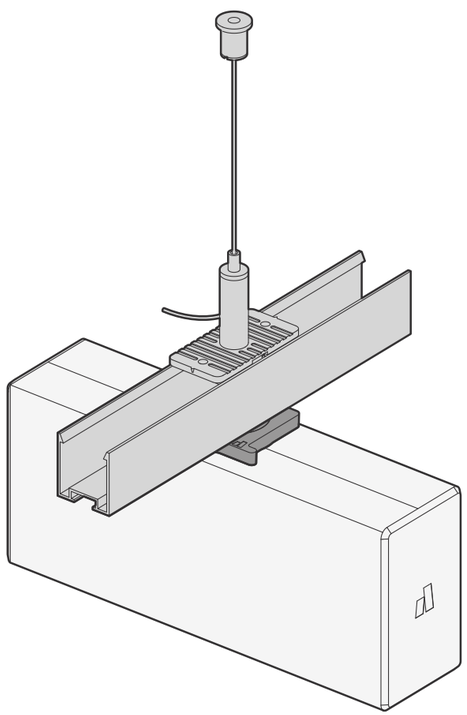

## Exploded View

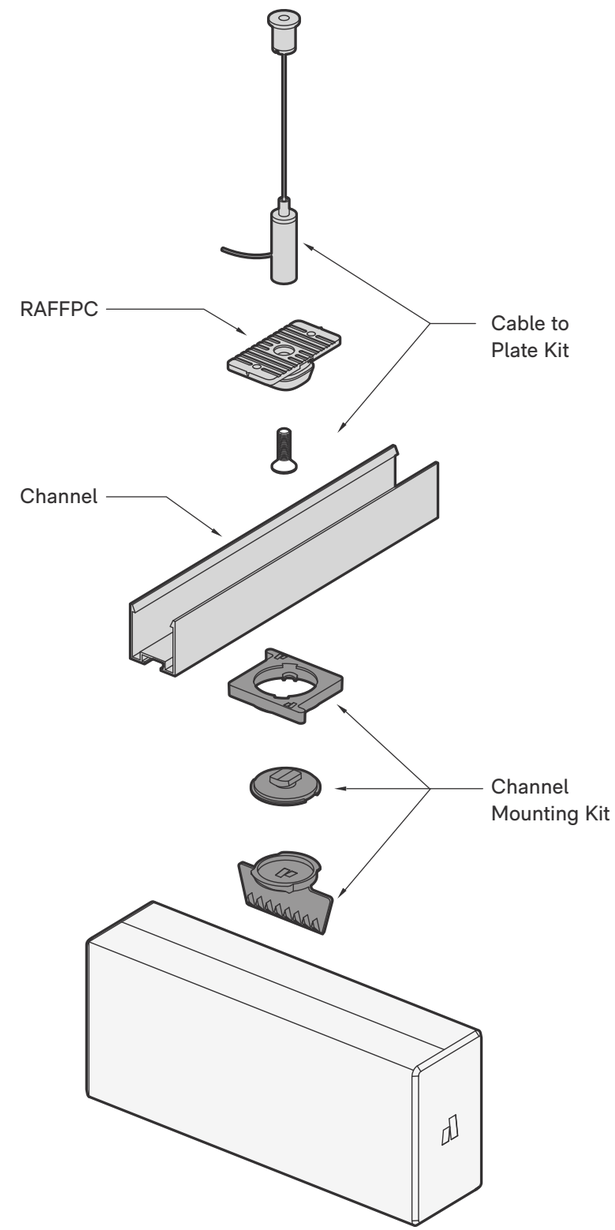


Note: This suspension method is suitable for small installations only.

# Assembly Details

## Direct to Cable Suspension

| Substrate | Fixing | Minimum Embedment |
|---|---|---|
| Concrete | Hilti-HUS3-HR6 | 40mm |
| Steel | 8G Tek Screw | 0.55mm |
| Timber | 8G Wood Screw | 30mm |

Note: Select fixing type to suit environmental and structural requirements.

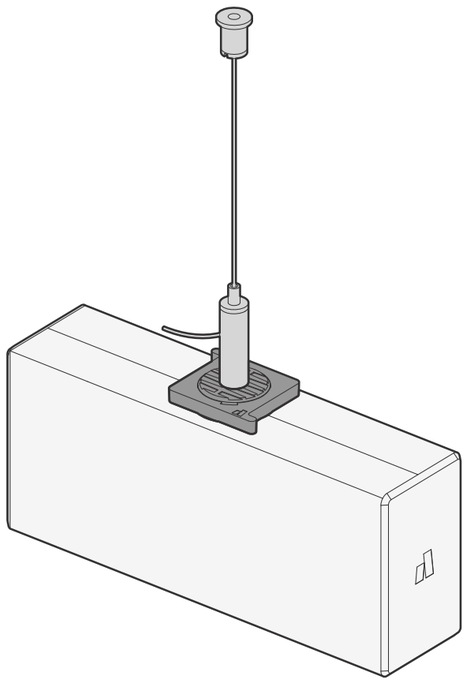

## Exploded View

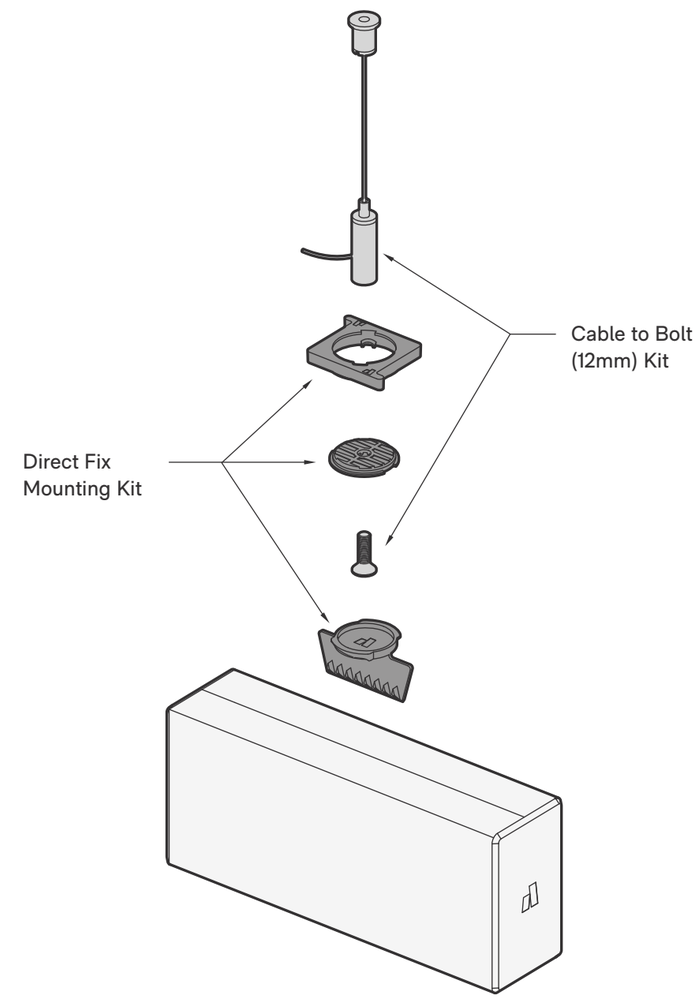


Note: This suspension method is suitable for individual beams only requires 1.5 x RAHVAS sets per Beam.

# Assembly Details

## Cross Rail to Ceiling Grid

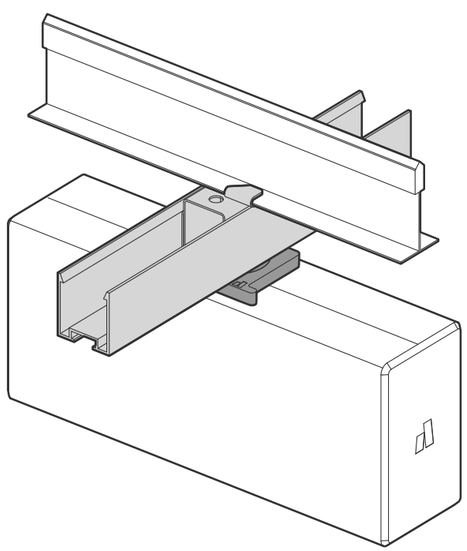

## Exploded View

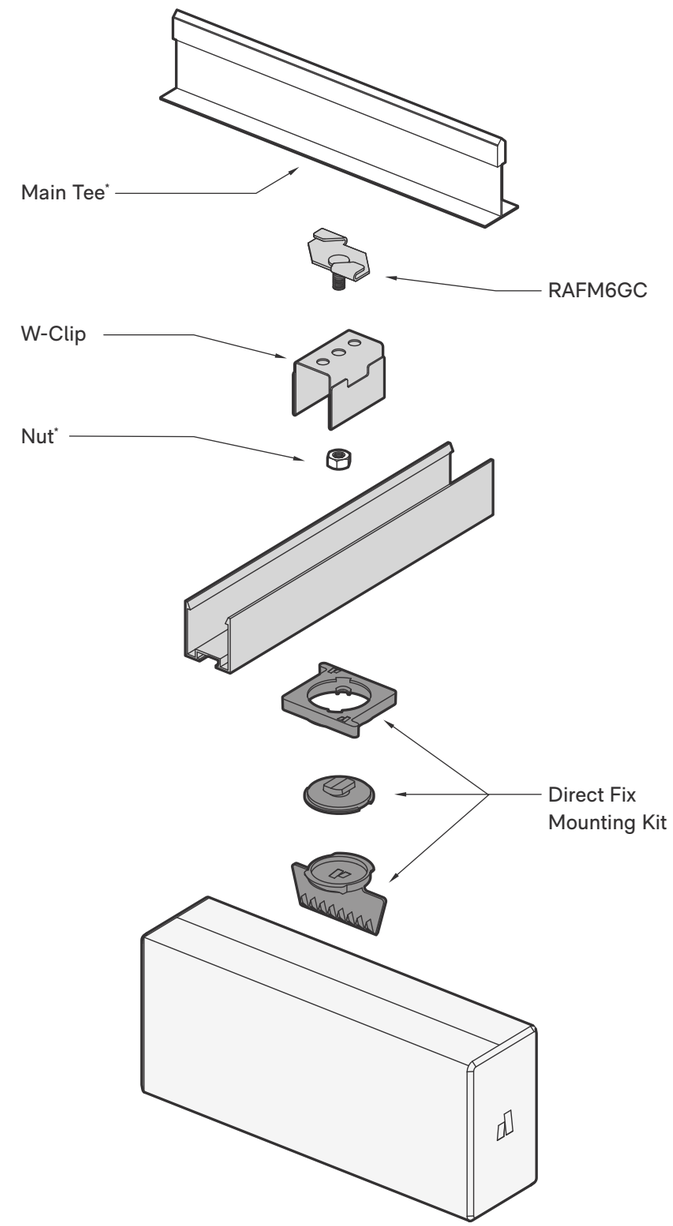


*Components not supplied by Autex Acoustics

# Part Identification

## End Cap 50 x 55

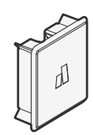

## End Cap 50 x 85

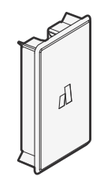

## End Cap 50 x 135

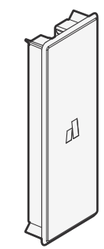

## Channel Mounting Kit

Twist Lock

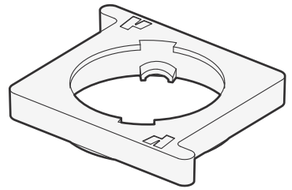

Channel Button

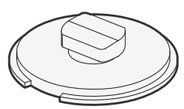

Hook Wedge

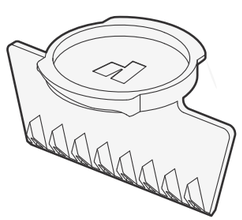

## Direct Fix Mounting Kit

Twist Lock

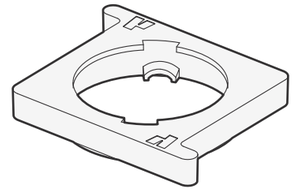

Direct Fix Button

Hook Wedge

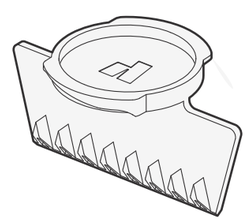

## Beam Joiner

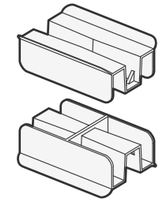

## Low Profile Channel

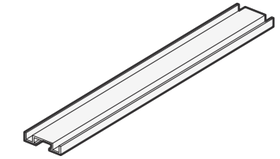

## Channel

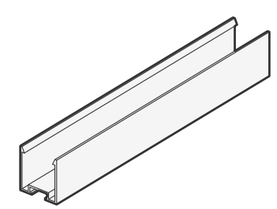

## Channel End Cap

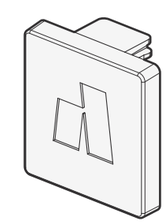

# Part Identification

## W-Clip

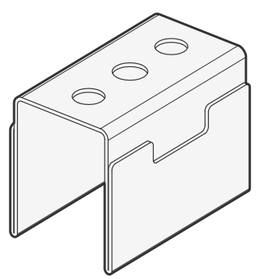

## Floating Panel Connector

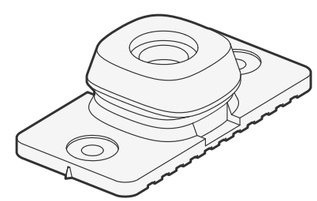

## RAFM6GC

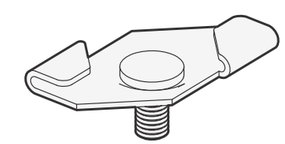

## Cable to Bolt 20mm Kit

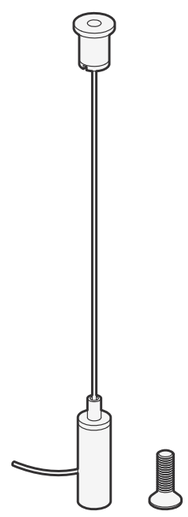
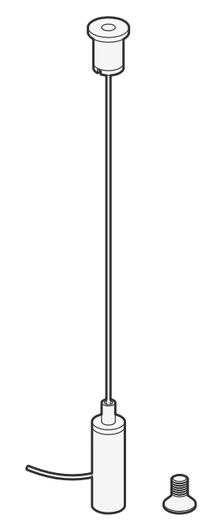
## Cable to Bolt 12mm Kit