Specification Guide

Frontier™ Raft is a three-dimensional acoustic ceiling system that combines a compact outer shell and hollow core to deliver broad-spectrum sound absorption.

Reimagined to achieve lower embodied carbon, Frontier Raft is the next evolution of our acoustic beam system. Frontier Raft features three pre-assembled profile options, and components made from 100% recycled PET.



In everything we do

CARBON NEUTRAL

Autex Acoustics®

Frontier™ Raft Acoustic Beam

Path to Specification

1. Space

What are the dimensions of the space you are designing?

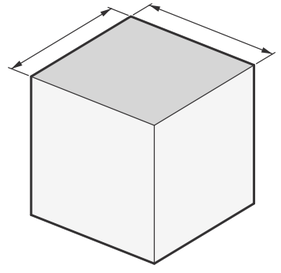

2. Size

What beam profiles and lengths are available?

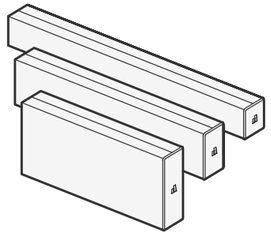

Page 4

3. Spacing

What spacing is recommended between beams?

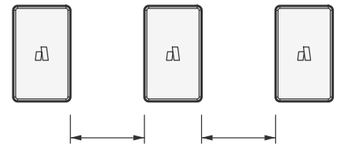

Page 5

4. Mounting Method

How will you fix beams to the ceiling?

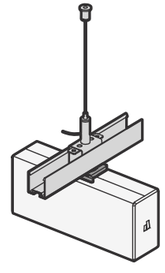

Page 6

5. Layouts

What layout details should be considered when specifying?

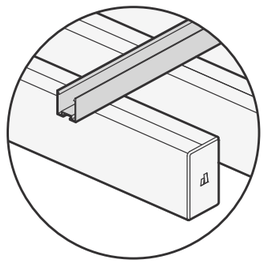

Page 7

6. Detail Considerations

What install details can be managed on-site?

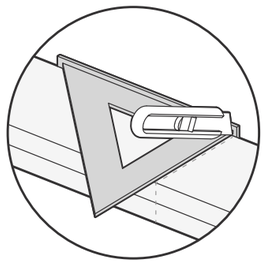

Page 8

7. Colours and Finishes

What colours and finishes are available?

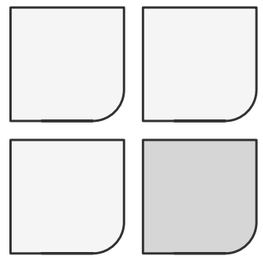

Page 9

8. Technical Information

What are the technical specifications?

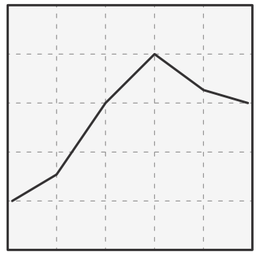

Page 15

Contents

Quick Reference

Dimensions

A. Depth	55mm, 85mm, 135mm
B. Width	50mm
C. Length	Standard: 2400mm, 2700mm Min: 600mm Max: 3000mm (MOQs apply)
D. Spacing	Standard = Depth (A) See Spacing page 5 for more details
E. Overhang	Standard: 200mm Min: 50mm, Max: 300mm
F. Mounting Span	Standard: 1050mm Max: 1350mm

Please contact your Autex Acoustics® account manager for more information

Mounting Methods

Suspended Channels	Channels suspended by threaded rod or cables Method shown in diagram
Low Profile Channels	Low profile channels direct fixed to substrate
Direct Fix	Direct fixed to substrate with screws or adhesive
Cable Suspension	Individually suspended by cables
Ceiling Grid	Cross rail to ceiling grid

See Mounting Methods page 6 for more details

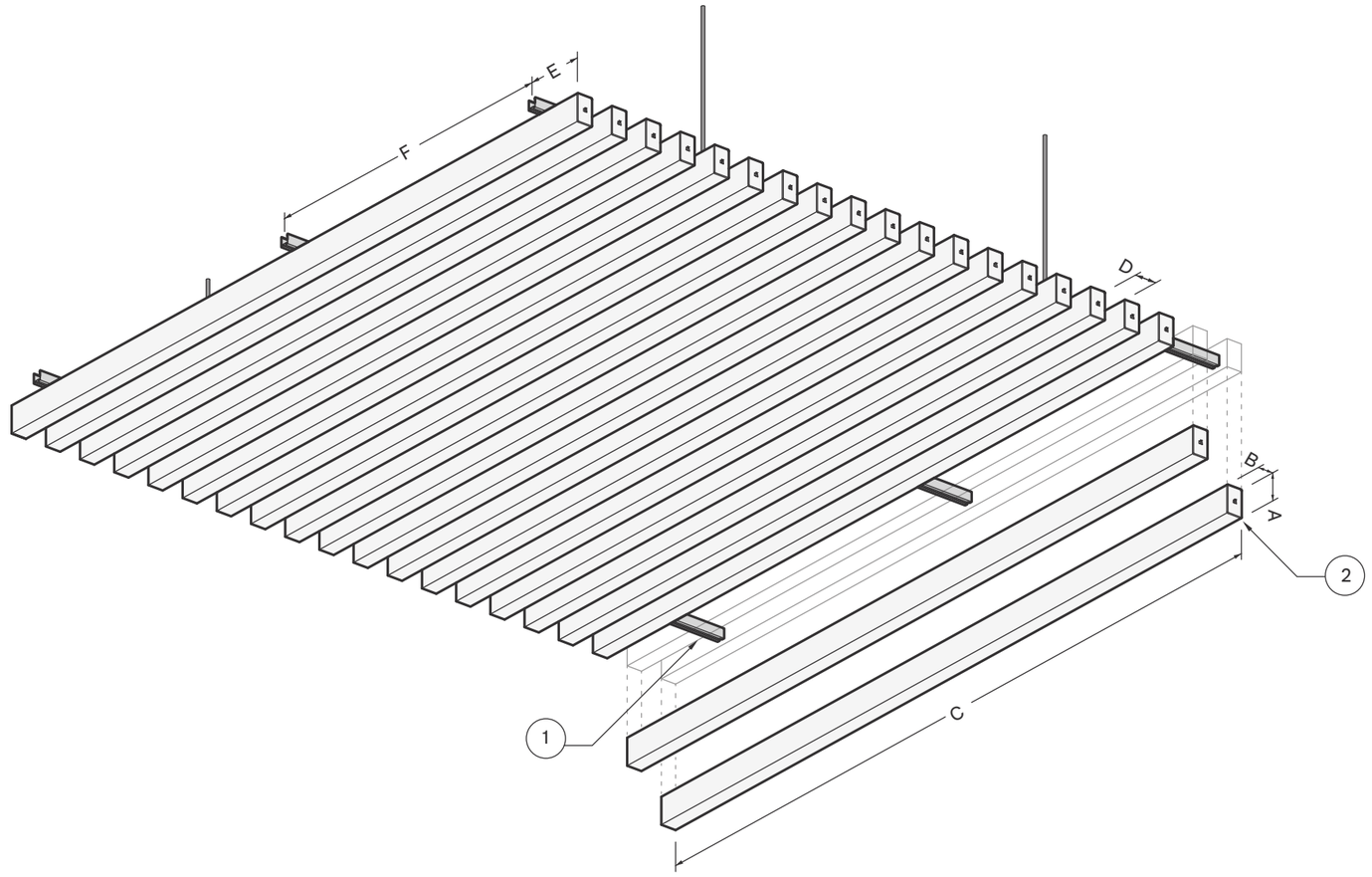

1. Mounting Kit

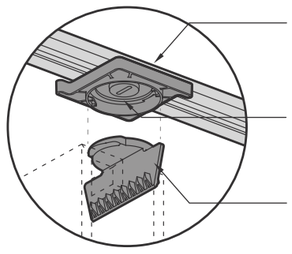

1. Locking Mechanism

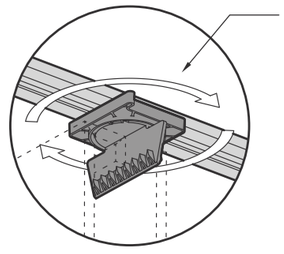

Once Hook Wedge is located in the Twist Lock piece, turn Twist Lock clockwise 90 degrees to lock the beam to the mounting point

Note: Clip is removable, refer to Installation Guide for more details

2. End Caps

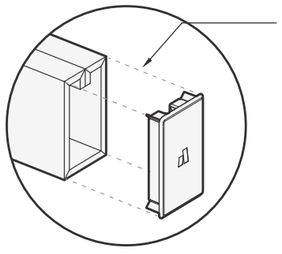

Beams are finished with colour matched Frontier Raft End Caps

Profiles and Lengths

Beam Profiles

Available in three beam depths to suit a range of design requirements.

Each profile optimises material usage, minimising waste, and is finished with colour-matched Frontier Raft End Caps.

The Mounting Kit adds an additional 8mm to the overall depth of the beam from the channel or substrate.

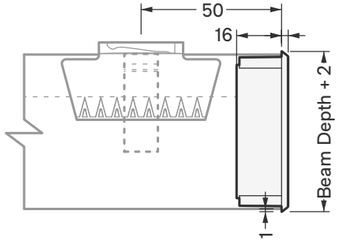

50 x 55

2400mm - 673.6g
2700mm - 756.9g

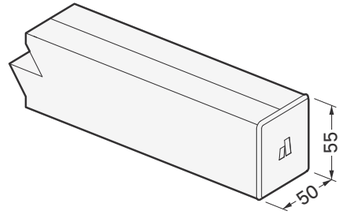

50 x 85

2400mm - 856.4g
2700mm - 961.3g

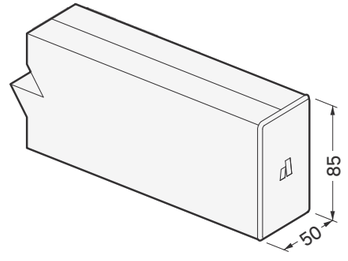

50 x 135

2400mm - 1129.9g
2700mm - 1158.4g

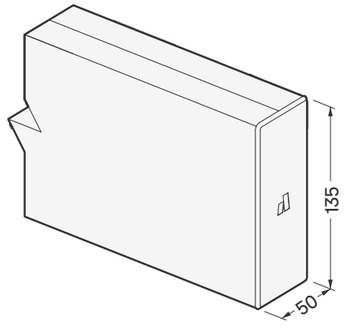

Beam Lengths

Beams are available in two standard lengths - 2400mm, 2700mm.

We offer custom beam lengths between 600mm and 3000mm. MOQs apply for lengths above 2700mm.

For the most efficient use of material, please refer to the standard length increments in the table. Selecting lengths that match these increments maximises sheet usage and reduces waste.

Please contact your Autex Acoustics account manager for more information.

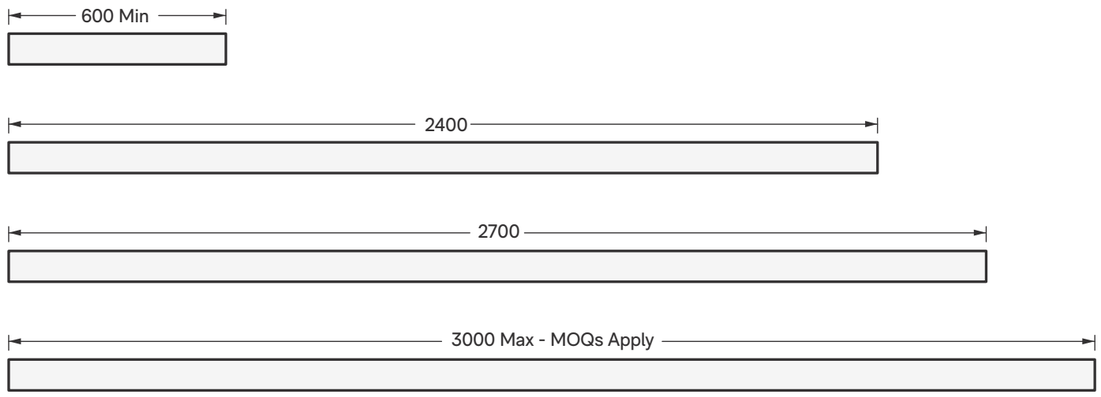

Standard Lengths	Increments				
	1	2	3	4	5
2400	1200	800	600		
2700	1350	900	675		
3000	1500	1000	750	600	

Cut Lengths

Standard Installed Array

Beam Profiles

- Generally, beam spacing is to be equal to the beam height
- Dimensions below show standard spacing for a 2400mm x 2400mm beam array
- Spacing can be managed on-site, ensure enough channels or cross rails are is supplied to mount beams

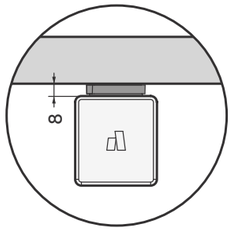

Twist Lock adds 8mm to the depth of the beam from the channel or substrate

Mounting Span

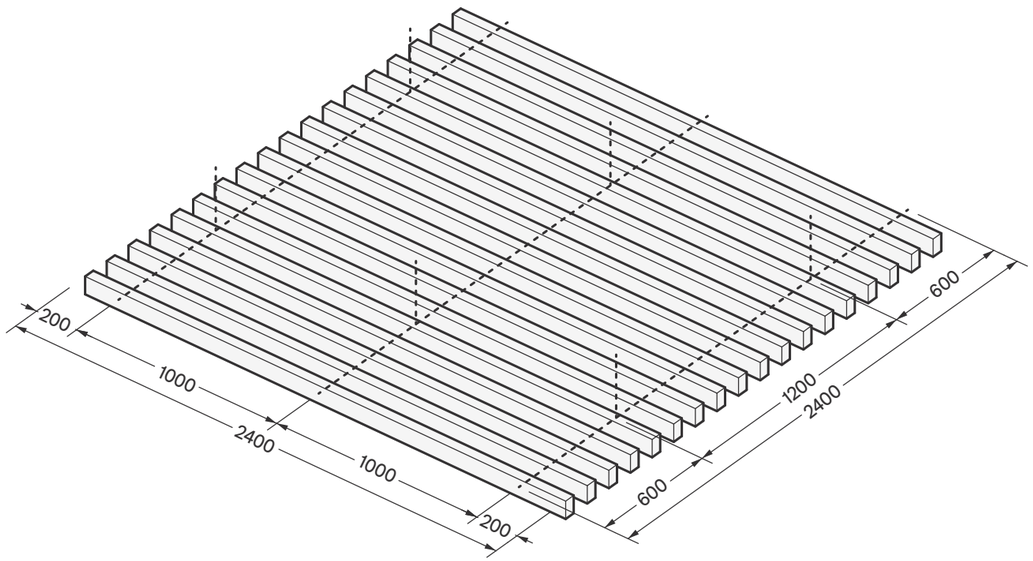

Note: Mounting spans may vary for end-to-end joined beam installs, see Layouts page 7 for more details

Beam Spacing

50 x 55
25 Beams
Total Weight: 22.7kg

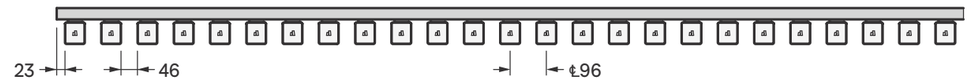

50 x 85
20 Beams
Total Weight 22.3kg

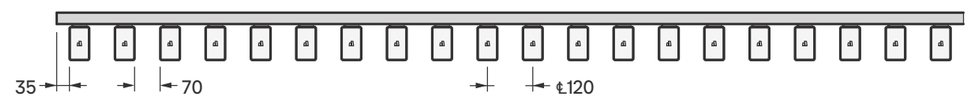

50 x 135
12 Beams
Total Weight: 22.5kg

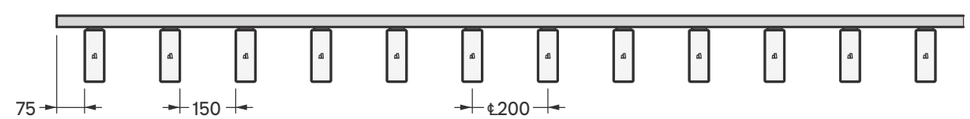

Spacing

Mounting Methods

Direct Fix

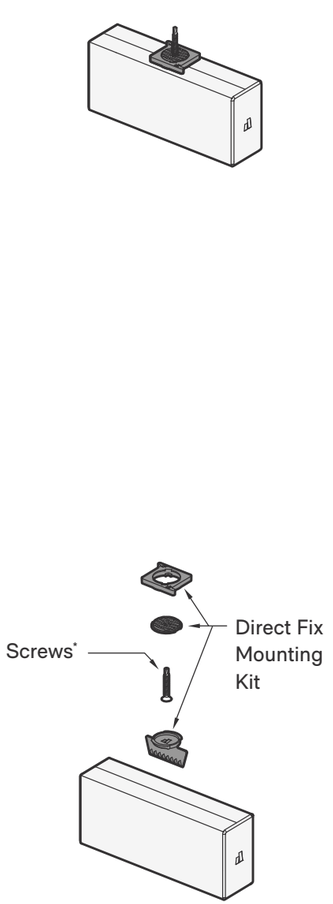

Low Profile Channel

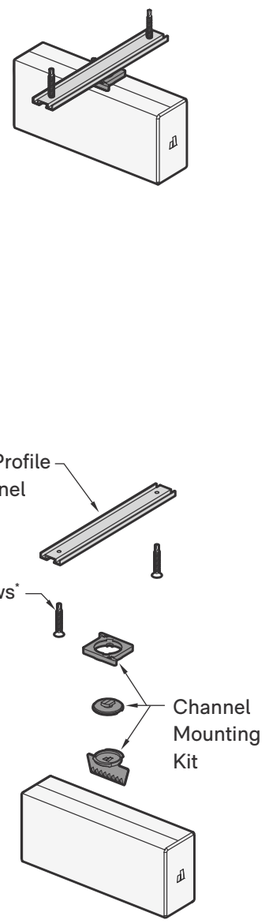

Cable Suspension

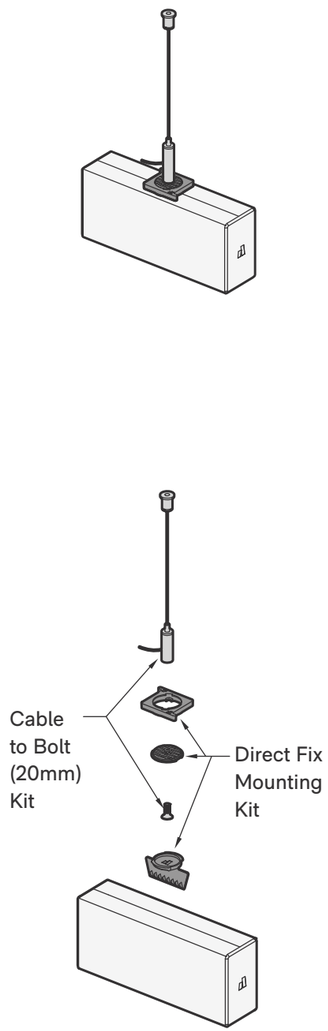

Cross Rail to Cable Suspension

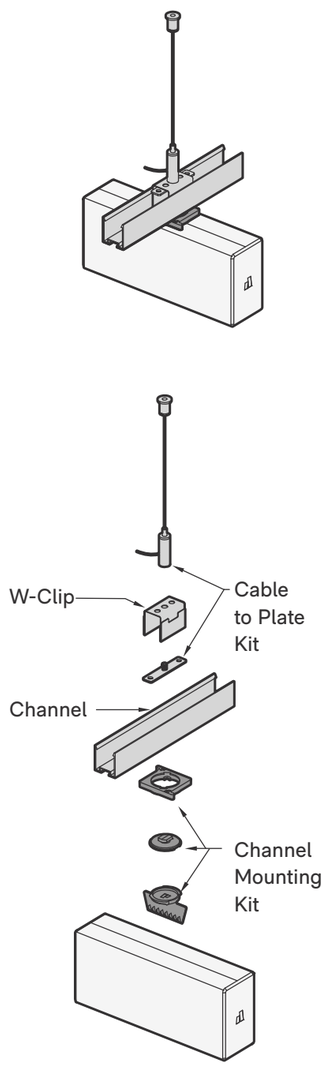

Cross Rail to Threaded Rod

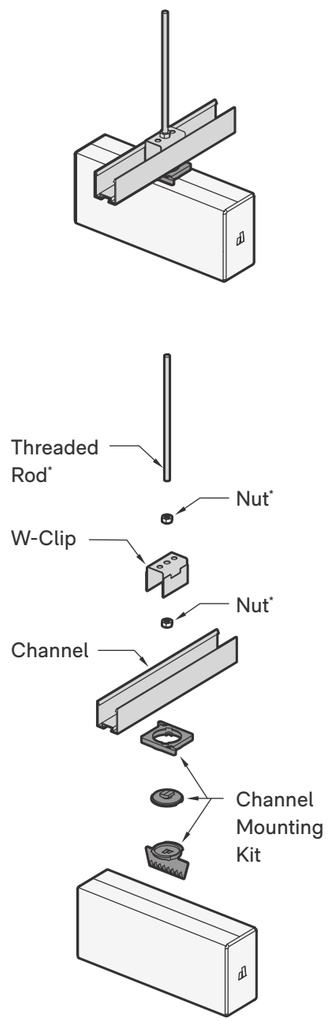

Cross Rail to Ceiling Grid

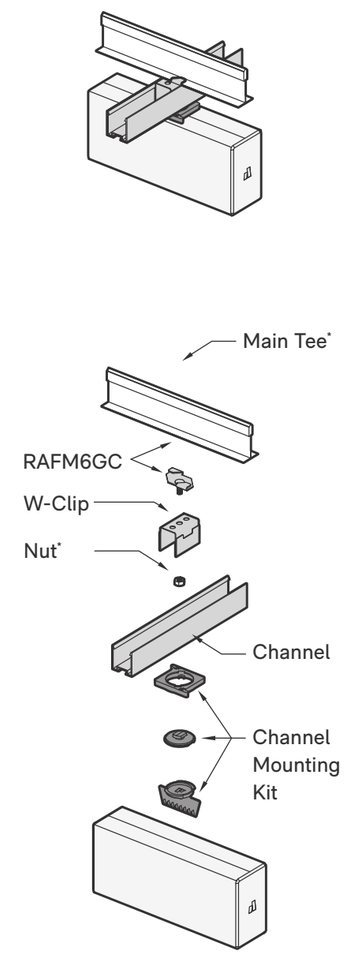

*Components not supplied by Autex Acoustics

Note: For seismic bracing details, see Installation Guide

Joining Modules

When joining beams end to end, mounting spans can vary. The first array requires 3 x cross rails, then every subsequent array requires 2 x cross rails. Follow mounting span dimensions below. The diagram shows the standard spans for repeat joining modules for 2400mm long beams. For further information on parameters, see Quick Reference page 3.

Maximum mounting span of 1350mm must be maintained.

1. Channel Joins

Aluminium Lateral Joiner slides into the ends of the two channels. Fixed together with 4 x black 8G 16mm Tek Screws. For more details on the Aluminium Joiner, see Installation Guide.

2. Beam Joins

All beam joins require a joiner inserted into the top and bottom of the beam, to secure the beams together.

An overhang of no more than 300mm is acceptable.

3. Beam Overhangs

Where the beam ends, an overhang of no less than 50mm and no more than 300mm is acceptable.

4. Seismic Bracing

For seismic bracing details, see Installation Guide.

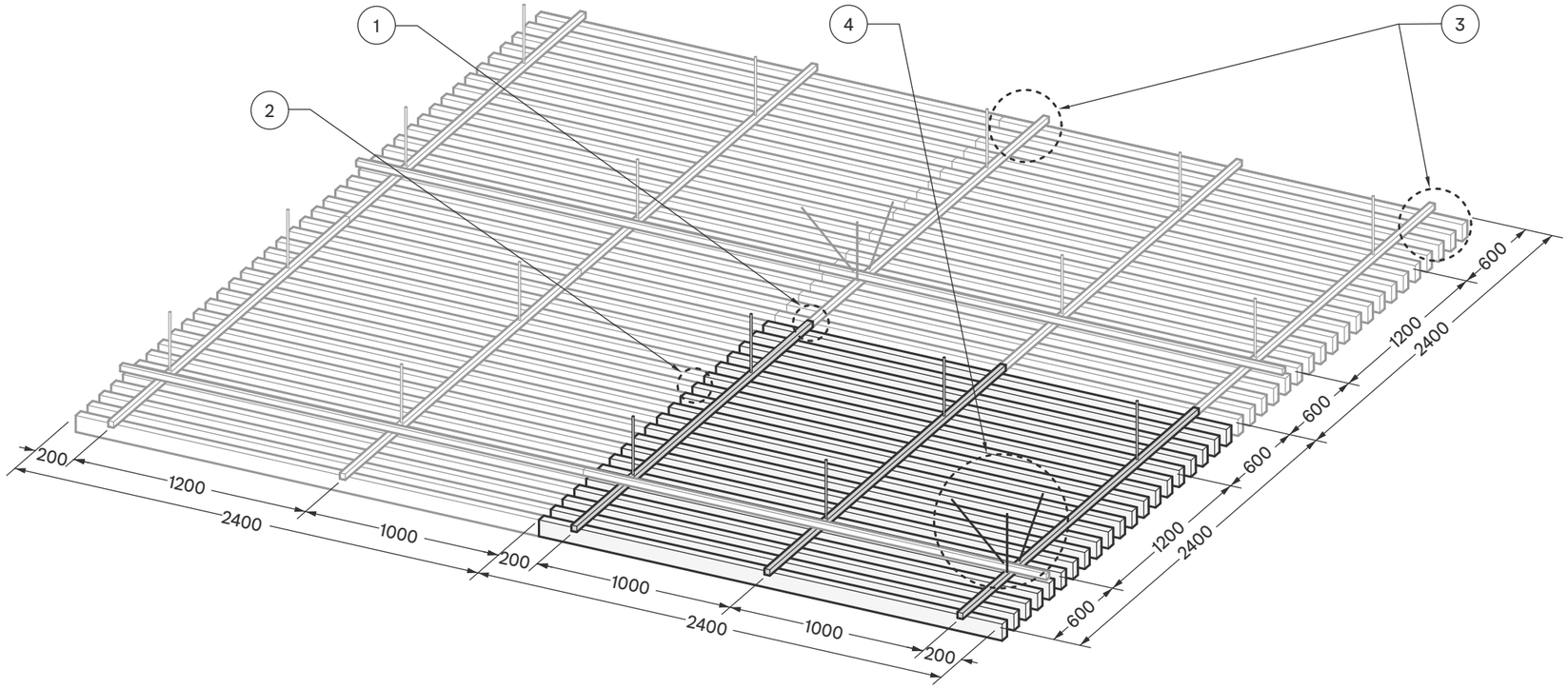

Detail 1

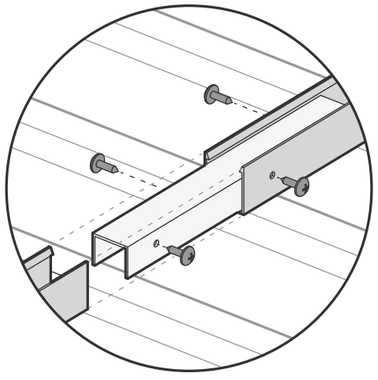

Detail 2

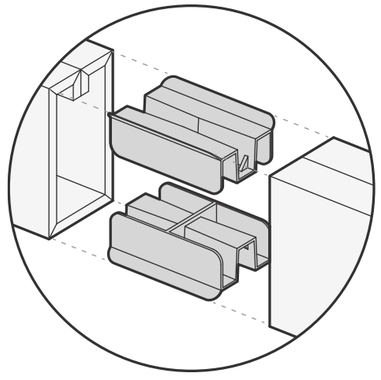

Detail 3

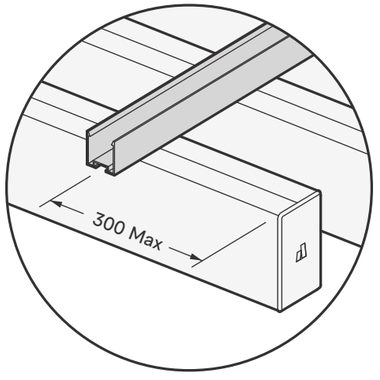

Note: When applying to longer beams, 1350mm is the longest acceptable span; for beams above 2.7m, 3 x mounting points will be required.

Detail Considerations

Clearance

Maintain a minimum clearance of 100mm between the beam array and surrounding obstacles.

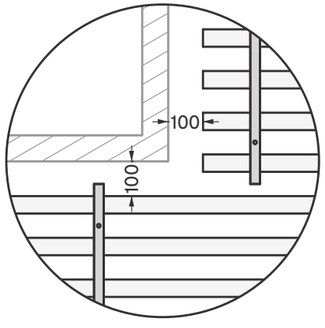

Angled Channel

The Mounting Kit features 360 degrees rotational adjustment, allowing channels to be positioned at any angle relative to the beam.

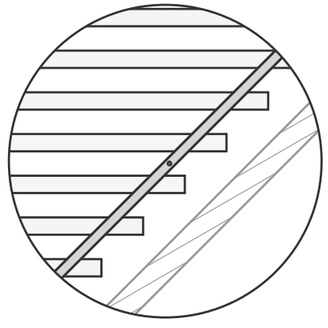

Cutting on Site

Beams can be cut on site using a set square and a sharp blade. See Installation Guide for more details.

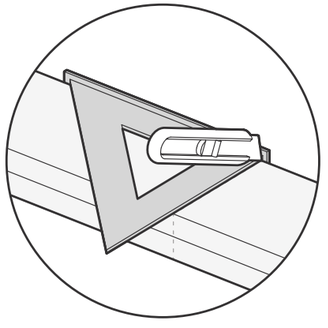

Hatches

When specifying a beam job with access hatches, see Installation Guide for hatch details.

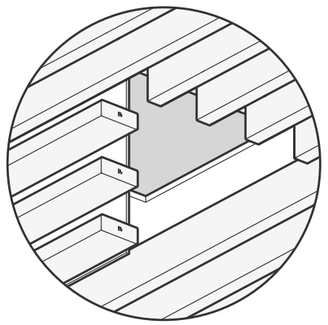

Lighting

We recommend lighting sits flush with the base of the beam, and is suspended separately to the Frontier Raft system. See Lighting Guide for more details.

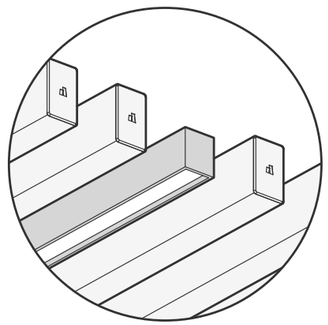

Sprinklers and Smoke Detectors

As a requirement, sprinklers, heat detectors and smoke detectors must sit below the base of the beam. See Frontier Raft Fire Guide for more details.

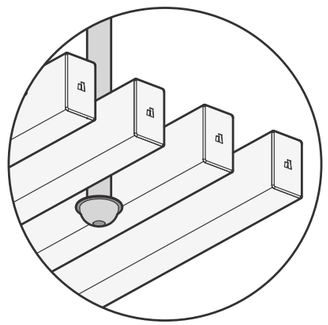

Services

Services such as air conditioning and vents should sit flush with the bottom of the beam. A 100mm clearance around these obstacles is recommended.

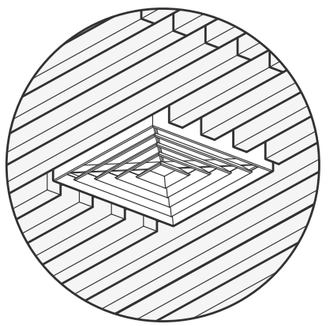

For further installation details, please refer to the Frontier Raft Installation Guide.

Colours

Cube™ Colours

Available in our full Cube™ colour palette, this lightweight, semi-rigid acoustic panel provides a broad range of options for Frontier Raft.



Frontier Raft End Caps

End Caps are printed to colour match Frontier Raft Beams for a seamless finish.

End Caps are made from 100% recycled PET through our industry-first pelletising process.





Surface Finishes

Acoustic Timber™

Acoustic Timber™ finishes are designed to realistically imitate timber.

To ensure a natural, high-end finish, we have hand-picked a selection of premium woodgrains taken from real timber veneers—digitally printed onto the panel surface with a safe, UV cured ink.

End Caps are printed to match selected Acoustic Timber woodgrains for a seamless finish.

*Queensland Walnut is recommended for baffles-only applications. Please contact your Autex Acoustics account manager for more information.


Birch


American Ash


Hoop Pine


Oak


Classic Oak


Aged Oak


Civic Oak


Prime Oak


Grey Ironbark


Soft Walnut


Coastal Oak


Tasmanian Oak


Black Walnut


Queensland Walnut*


Yakisugi Black

Colour Light Reflectance Values

Cube LRVs are measured in accordance with BS 8493:2008+A1:2010

Acros	40
Beehive	33
Canyon	19
Caspian	6
Cavalier	12
Colosseum	52
Empire	5
Falling Water	34
Flatiron	24
Gherkin	8
Highland	19
Marina	36
Muralla	9
Opera	49
Park	23
Parthenon	33
Pavilion	80
Petra	16
Petronas	2
Pinnacle	3
Rushmore	41
Sargazo	4
Savoye	46
Senado	44
Terrace	24
Tree House	3



Frontier™ Raft RePET Components

Frontier Raft RePET components are made from 100% recycled PET through a unique and industry-first pelletising process.

This process transforms in-house waste into pellets, which are injection-moulded to make more product components.

And, because these components are made from 100% PET, they can be easily disassembled and recycled through the RePET process again and again, creating a truly circular lifecycle.

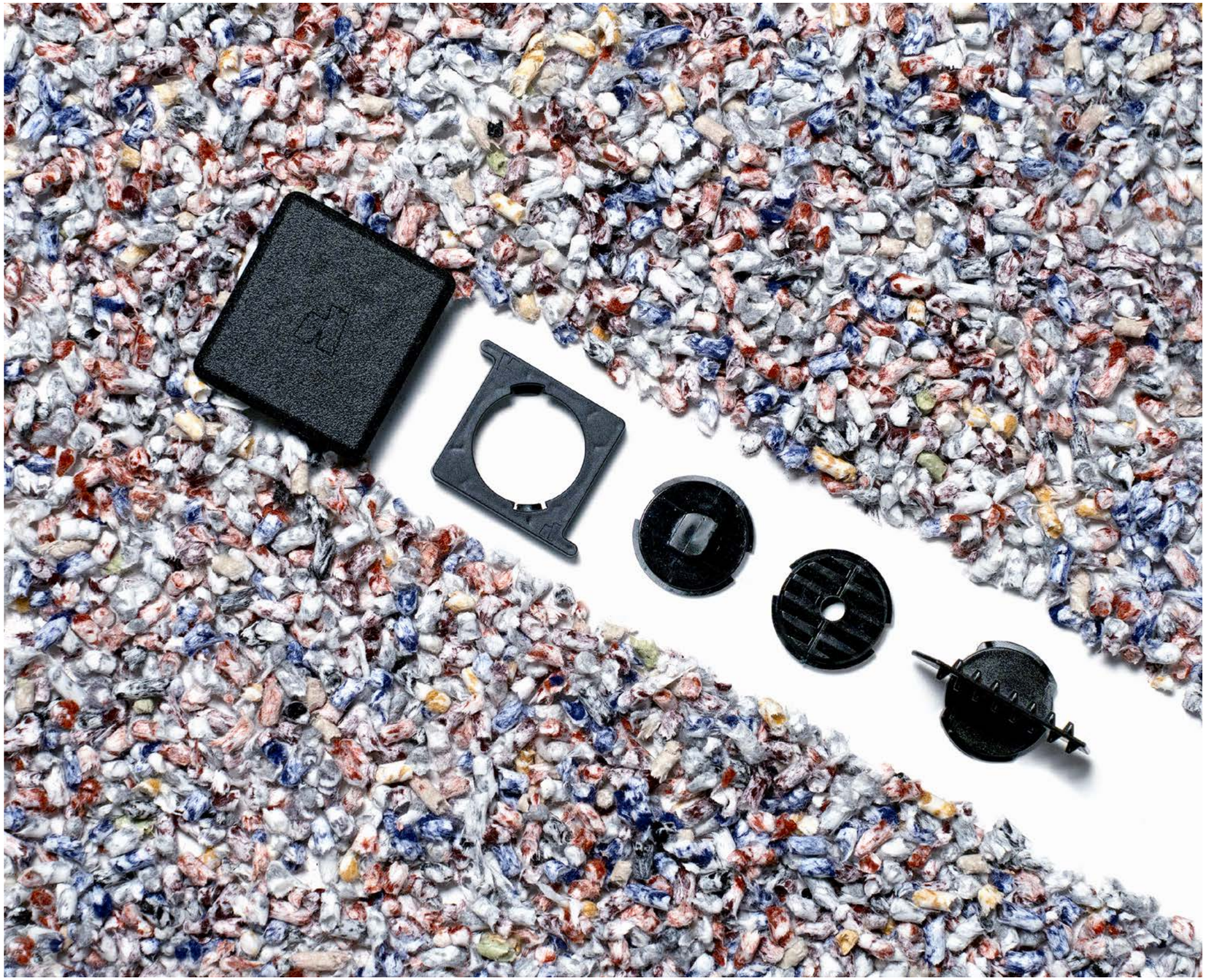

Sound Materials

We’re on a positive journey towards momentous change. It’s about winning for the planet and its people, making a difference for healthy generations to come.

Sustainability is ingrained in everything we do, from fibre to finish. Our commitment to doing good now and in the future drives us to continuously evolve our practices, design with integrity, and take responsibility for the impact of our products. Our five sustainability pillars reflect this ethos, guiding our actions and shaping our decisions. Together, these pillars form a system that ensures our materials, products, and processes contribute meaningfully to a more sustainable world.



01

Climate change demands climate action

We are carbon neutral in everything we do.

02

Closing the loop

We are advocates for closing the loop on waste. We design with circularity front of mind.

03

Sustainable supply chain

We carefully select responsible suppliers and take action to mitigate unethical practices, and encourage good working conditions.

04

Supporting wellbeing in buildings

All our products are made using only safe materials. No harmful chemicals are present in our products.

05

Operating a business for purpose and profit

We strive to have a positive impact on our environment, our people, and the next generation.

Credentials

Sustainability isn’t just a feature—it’s a foundation. Our products are independently certified by trusted third-party certifications and labels to meet rigorous environmental and performance standards.

Our products also meet criteria for WELL, LEED, Green Star, and BREEAM building rating systems, helping you achieve certification for your project.

EN 15804 COMPLIANT EPD Global GreenTag

GREENTAG CERTIFIED trustbrands

Declare.

CERTIFIED INDOOR AIR QUALITY SCS GLOBAL SERVICES

hpdc MEMBER

Third Party Verified

Telarc. Registered cert TM Environment ISO 14001

Telarc. Registered cert TM Quality ISO 9001

Telarc. Registered cert TM Health & Safety ISO 45001

Our Journey to Nature Positive

We want to make a material difference to the planet and its people. That's why we're not resting on achieving carbon neutrality across the organisation and our products.

We're on a journey committed to Nature Positive, which ultimately delivers systems and products that contribute to biodiversity replenishment, carbon sequestration, and many positive environmental outcomes.

It's manufacturing that cares for human beings and the generations to come.

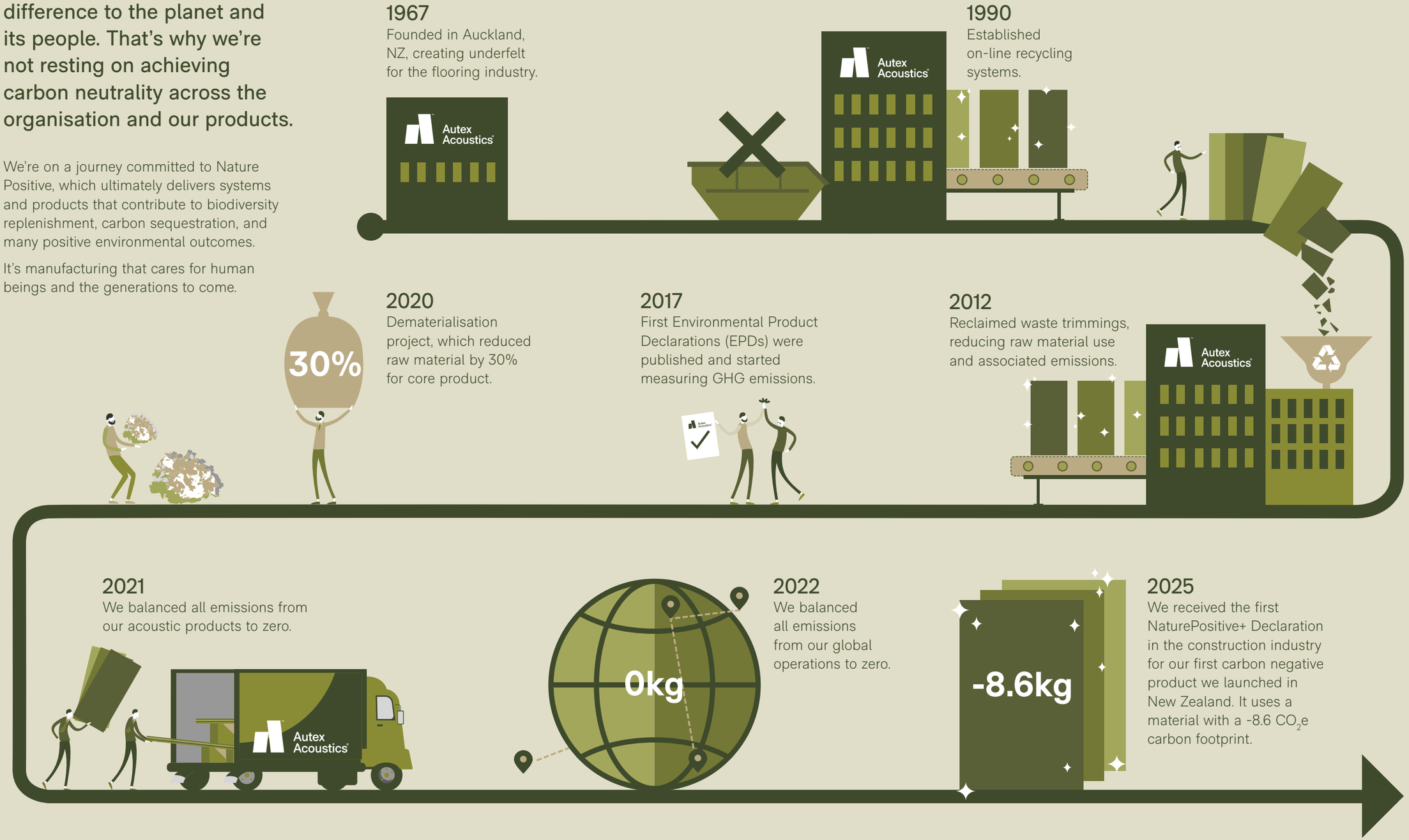

1967
Founded in Auckland, NZ, creating underfelt for the flooring industry.

1990
Established on-line recycling systems.

2012
Reclaimed waste trimmings, reducing raw material use and associated emissions.

2017
First Environmental Product Declarations (EPDs) were published and started measuring GHG emissions.

2020
Dematerialisation project, which reduced raw material by 30% for core product.

2021
We balanced all emissions from our acoustic products to zero.

2022
We balanced all emissions from our global operations to zero.

2025
We received the first NaturePositive+ Declaration in the construction industry for our first carbon negative product we launched in New Zealand. It uses a material with a -8.6 CO_2e carbon footprint.

Technical Information

Overview

NRC	**0.55 - 0.80**
Content	100% PET, min. 80% recycled
Form	Acoustic Beams
Dimensions	50mm x 55mm 50mm x 85mm 50mm x 135mm
Origin	Made in New Zealand

Fire Considerations

ISO 9705: 1993
Classification: **Group 1-S**
Frontier is a made from Cube as the base material.

Fire test reports available on request.

Ten Year Manufacturer's Guarantee

Product Specifications

Microbial resistance (ASTM G21-15):
Growth rating: 0

Colour fastness to light (ISO 105-B02:2014):
Rating: 6

Determination of colourfastness to rubbing (ISO 105-X12:2016):
Dry assessment: 4 - 5
Wet assessment: 4 - 5

Average % of water vapour sorption by weight after four days: 0.4%

Acoustic Performance

Frontier Raft is specifically designed to reduce and control reverberated noise and echo in building interiors. Acoustic testing conducted to ISO 354:2003. Official reports available on request.

Frequency (Hz)	125	250	500	1000	2000	4000	NRC
50 x 55 100mm centres, Direct fix	0.05	0.15	0.50	0.80	0.90	1.00	0.60
50 x 55 100mm centres, Suspended 200mm	0.00	0.20	0.45	0.65	0.95	1.00	0.55
50 x 85 100mm centres, Direct fix	0.05	0.25	0.65	0.80	0.95	1.00	0.70
50 x 85 100mm centres, Suspended 200mm	0.05	0.30	0.55	0.80	1.00	1.00	0.70
50 x 135 100mm centres, Direct fix	0.10	0.45	0.80	0.80	1.00	1.00	0.80
50 x 135 100mm centres, Suspended 200mm	0.10	0.45	0.70	0.90	1.00	1.00	0.80

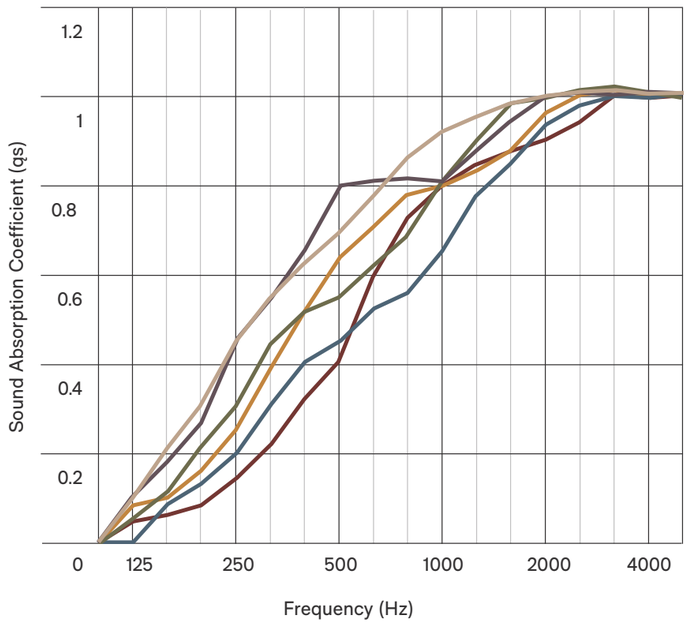

CARBON NEUTRAL

Third Party Verified

Declare.