THOR KITCHEN®

USE + CARE MANUAL

30 INCH PROFESSIONAL ELECTRIC SINGLE WALL OVEN

AEW30ES

REV.092026

USE AND CARE MANUAL

30 IN PROFESSIONAL ELECTRIC SINGLE WALL OVEN

AEW30ES

THOR KITCHEN®

TABLE OF CONTENT

IMPORTANT SAFETY TIPS 4
Safety Precaution 4
WARNING 5
Electrical Safety 6
Safety During Use 6
Child Safety 7
Safety When Cleaning 7
INTRODUCING YOUR NEW OVEN 8
Overview 8
What's included with your oven 8
BEFORE YOU BEGIN 9
OPERATING THE OVEN 10
Operating Control Panel 10
Cooling Fan 11
Energy Saving Tips 11
Setting The Clock 11
Setting The Oven 11
General Operation Logic(Applies to Most Functions) 13
Specific Functions (Key Details Only) 13
Bake 13
Conv Bake 13
Conv Roast 14
Air Fry 14
Broil 15
Keep warm 15
Pizza 16
Proof (Dough Fermentation) 16
Delay Start (Scheduled Cooking) 16
Oven Food Probe (Only for Bake/Conv Bake/Conv Roast) 16
Self-Clean 18
Minimum and maximum settings 20
Oven Rack Positions 21
Rack and Pan Placement 21
Before using the rack 22
MAINTAINING THE OVEN 23
TROUBLESHOOTING 25
WARRANTY 29

IMPORTANT SAFETY TIPS

Read and follow all instructions before using your oven to prevent the risk of fire, electrical shock, personal injury or damage when using the oven. This guide does not cover all possible conditions that may occur. Always contact your service agent or manufacturer about problems you do not understand.

SAFETY PRECAUTIONS

- Be sure your appliances are properly installed and grounded by a qualified technician.
- Do not repair or replace any part of this appliance unless specifically recommended in this Use & Care Manual.
- All servicing of this appliance should be carried out by a qualified technician.
- Always disconnect the power to the appliance before servicing by unplugging the power cord, removing the fuse or switching off the circuit breaker.

DO NOT TOUCH HEATING ELEMENTS OR INTERIOR SURFACES OF OVEN WHEN IN USE

Heating elements may be hot to the touch even though they are dark in color and not glowing. The interior surface of the oven can become hot enough to cause burns.During and after use, do not touch or let clothing or other flammable material contact heating elements or interior surfaces of oven until they have had sufficient time to cool. Other surfaces of the appliance may become hot enough to cause burns. Use caution around oven vent openings and surfaces near vent opening, oven doors, and window of oven door.

USE CARE WHEN OPENING DOOR.

Let hot air or steam escape before you remove or place food in the oven.

DO NOT HEAT UNOPENED FOOD CONTAINERS.

There will be a build up of pressure in sealed food containers when heated. This can lead to containers bursting and resulting in injury.

- Keep oven vent / ducts unobstructed.

  The oven vent becomes hot during oven use. Never block this vent and never place plastic or heat sensitive items on or near the oven vent .

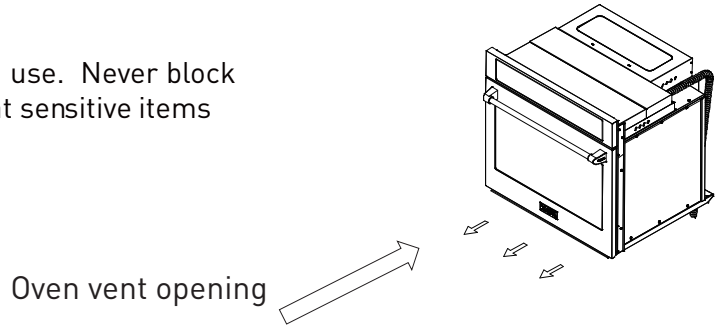

SAVE THESE INSTRUCTIONS

Note:

For proper operation,vent trim must be installed below the oven door to correctly channel cooling air flow for oven.

WARNING

- **NEVER** use this appliance for warming or heating the room.
- **DO NOT** use water on grease fires.

  Should an oven fire occur, DO NOT open the oven door. Turn off the oven. Once the fire has consumed all oxygen in the oven the fire will go out on its own.If it does not,use an ABC type Fire extinguisher.
- Use dry pot holders only.

  Moist or damp pot holder on a hot surface may result in steam burns. Do not allow pot holders or clothing to contact heating elements. Do use towels or other bulky cloths to pick up hot items. Use a dry pot holder or equivalent .
- **Wear appropriate apparel when operating appliance**.

  Loose fitting or hanging garments should never be worn while using the appliance.
- **Be certain all packing materials are removed from the appliance before operating**.

  Keep all plastics, clothing, paper and other flammable products away from parts of the oven that become hot.
- **DO NOT Force the oven door open.** This can damage the automatic door locking system.

  Wait for the oven to fully cool before trying to open the door. When opening the door after Self-Clean, stand to the side of the door and allow hot air and steam to escape, the oven may still be very hot.
- DO NOT use steel wool pads. Steel wool will scratch the stainless steel surfaces as well as rack and oven interior.
- DO NOT use harsh etching tools, abrasive, cleaners, or sharp metal scrapers to clean the oven surfaces or glass, as this may cause damage to the product.
- Use caution when removing the oven door. Oven door is HEAVY. DO NOT lift the oven door by the handle or carry the door by the handle.

⚠ WARNING

This appliance contains chemicals known to the State of California to cause cancer and/or reproductive harm, and birth defects or other reproductive harm. For more information go to www.P65Warnings.ca.gov.

SAVE THESE INSTRUCTIONS

ELECTRICAL SAFETY

- Protective **Liners.** DO NOT use aluminum foil or any other material to line the oven bottom. This include silicone liners. Doing so will cause permanent damage to the oven interior.

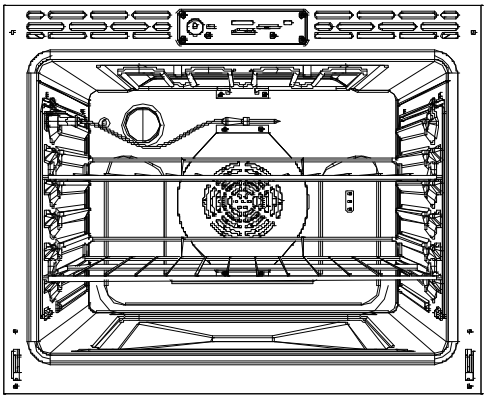

- **DO NOT place aluminum foil directly on the oven bottom.**
- **DO NOT line the oven walls, racks, bottom, or any other part of the oven with aluminum foil or any other material**. Doing so will result in poor cooking results. The foil will disrupt the heat distribution and result in permanent damage to the oven.
- Before **replacing the oven light bulb switch off the electrical power to the oven at the circuit breaker panel.** Failure to do so can result in severe personal injury , death or electrical shock.

SAFETY DURING USE

- Always place the oven rack in the desired position while the oven is cool.
- Always use pot holders or oven mitts when removing food from the oven or adjusting the oven rack.Hot cookware and racks can cause burns.
- **Use caution with TIMED COOKING or DELAY TIME COOKING features.** Use the automatic time features when cooking cured or frozen meats and most fruits and vegetables. Foods that can easily spoil, such as milk, eggs, fish, red meats and poultry should be chilled in the refrigerator first. Even when chilled they should not stand in the oven for more than 1 hour prior to cooking starting.They should be removed promptly once cooking is complete. Eating spoiled foods can result in foodborne illness.
- **Should an oven fire occur, leave the oven door closed, and turn off the oven.** If the fire continues , use an ABC fire extinguisher.
- **DO NOT use water to put out a fire.**
- **DO NOT use the broiler pan without the grid in place.DO NOT cover the Grid with aluminum foil.**

SAVE THESE INSTRUCTIONS

CHILD SAFETY

- **Children should be kept away from the oven.**
- **Children should not be left alone or unattended in the area where the oven is in use.**
- **Do NOT leave small children unattended near the appliance**, During the self-cleaning cycle , the outside of the oven can become very hot to the touch.

SAFETY WHEN CLEANING

- **Do not clean the door gasket.** The door gasket is essential for a good seal between the oven body and the door. Do not use cleaners or push or rub on the door gasket.
- **Do not use oven cleaners.** No commercial oven cleaner or oven liner protective coatings of any kind should be used in or around any part of the oven.
- **Before self cleaning the oven ,**remove the broiler pan, all oven racks, meat probe and any other utensils from the oven cavity.
- **Never keep pet birds in the kitchen.** The health of birds is extremely sensitive to the fumes released during an oven self-clean cycle. Fumes may be harmful or fatal to birds. Move birds to a well ventilated room.
- **Important instructions.** In the event of a failure during the self-clean cycle, an "F" and a number error code will be displayed. Record this number for the service technician. Shut down the power to the oven. Contact a qualified service technician.
- Ensure the oven light lens and all interior surfaces have cooled before cleaning or wiping them down to avoid thermal shock.
- **Do not block the oven vent during operation.** Blocking the oven vents can cause the oven to overheat and trip safety thermal protectors on the oven. The airflow from the bottom of the wall oven should never be obstructed

SAVE THESE INSTRUCTIONS

INTRODUCING YOUR NEW OVEN

Overview

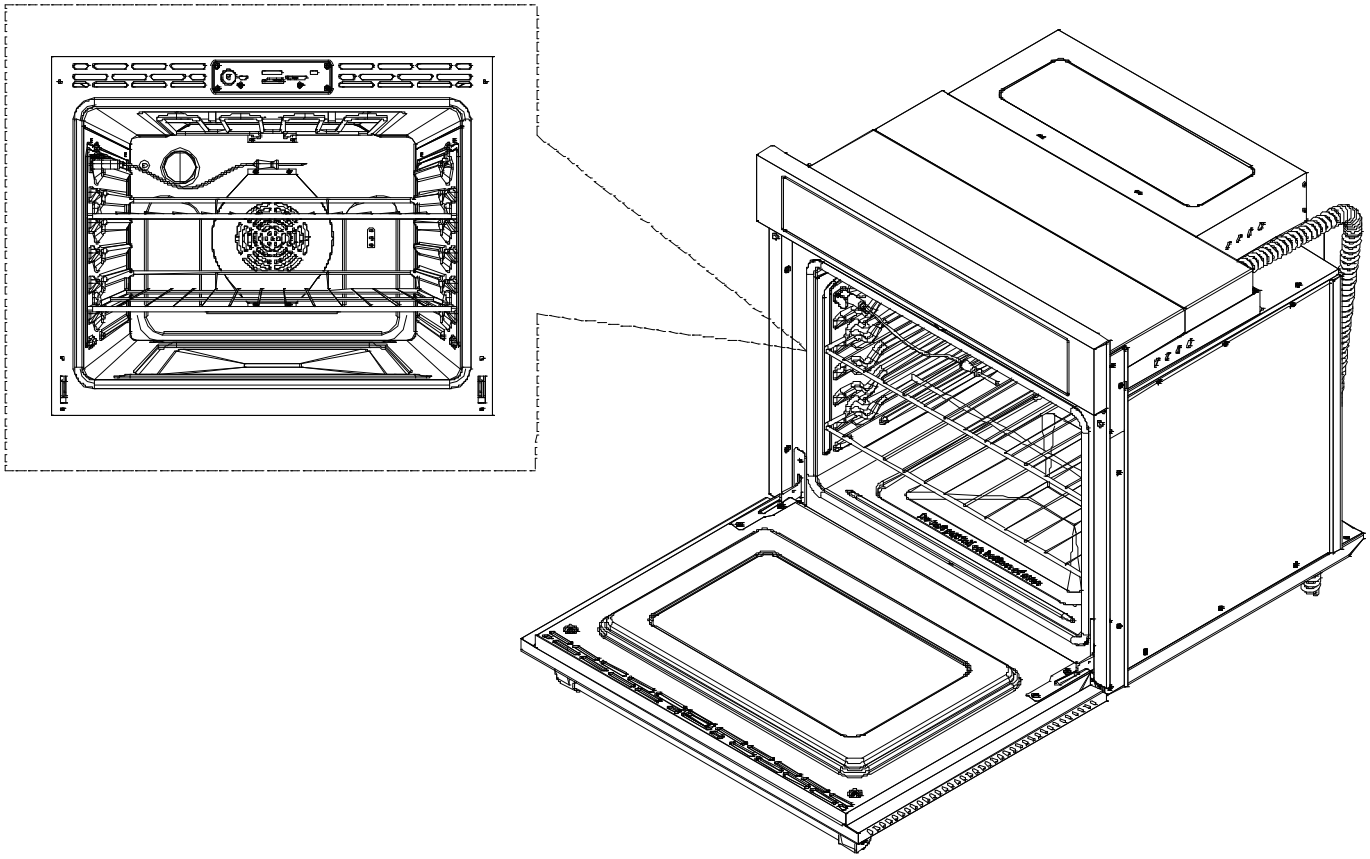

What's included with your oven

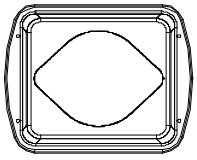

1*Broil Pan

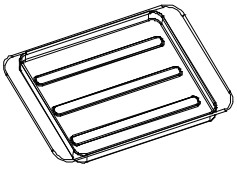

1*Air Fry Tray

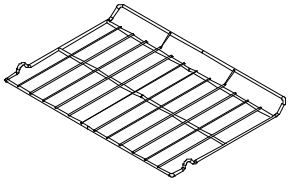

2*Oven Racks

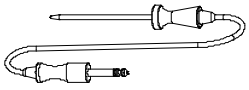

1*Temp probe

Remove all rack accessories. Make sure there is no packing material remaining in the oven. Clean the oven thoroughly before using it for the first time. Then set the oven to Bake, set temperature for 400°F and run for 1 hour. Then set unit to Broil and run for an additional 30 min on Broil. There will be a distinctive odor. This is normal. You may see a light smoke from the oven vent area and inside the oven as the manufacturing and protective coating oils are burned off. Ensure your kitchen is well ventilated during this conditioning period.

Energy Saving Tips

• During cooking, the oven door should remain closed except when you turn food over. Do not open the door frequently during cooking to maintain the oven temperature and to save energy.

• If cooking time is more than 30 minutes, you can switch the oven off 5-10 minutes before the end of the cooking time to save energy. The residual heat will complete the cooking process.

• To save energy and reduce the time needed for reheating the oven, plan oven use to avoid turning the oven off between cooking one item and the next.

• Whenever possible, cook more than one item at a time.

OPERATING THE OVEN

Operating Control Panel

Control Panel Features

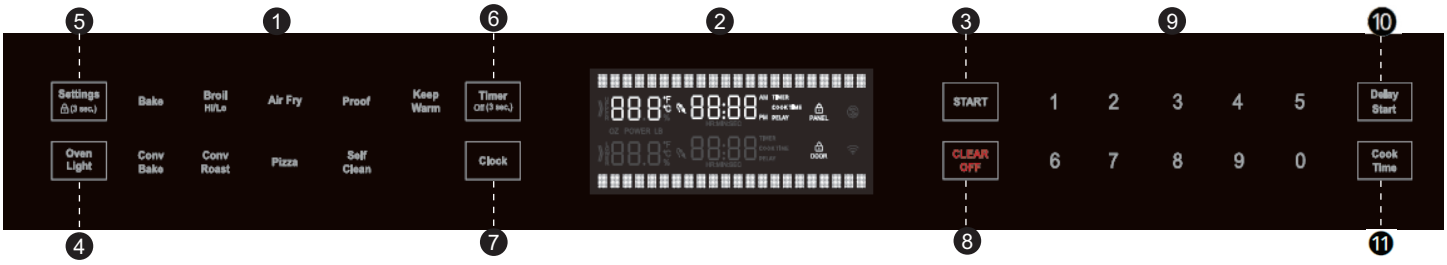

❶ Oven Functions
Select various functions of the oven.

❷ Display
Oven operation and settings appear in the display.

❸ START
Use to start all functions.

❹ Oven Light
Use to turn the oven on and off.

❺ Settings
Press to select and adjust oven settings.
Press and hold the Settings button for three seconds to activate/deactivate **Control Lock** .

❻ Timer Off
Use to set or cancel the timer of the oven.

❼ Clock
Use to set the time of day.

❽ CLEAR OFF
Use to stop cooking or cancel settings of the oven.

❾ Number Pads
Use to set any function requiring numbers such as the time of day on the clock, the timer, the oven temperature, the start time, and the length of operation for timed baking, etc.

❿ Delay Start
Press the button to set the delayed time cook. The oven starts at the set time.

⓫ Cook Time
Press the button to set the desired amount of time for food to cook. The oven shuts off when the set cooking time runs out.

NOTE

- **Setting the Time, Timer and Temperature**

If you enter one digit of a number incorrectly, enter the entire number again to correct it. For example, if you press 1, 0, 3 and 1 to set the clock for 10:30, press 1, 0, 3 and 0 to enter the correct time.

Cooling Fan

Your appliance has a cooling fan. The cooling fan switches on during operation. The hot air escapes above the door. The cooling fan continues to run for a certain time after operation.

⚠ CAUTION

Do not cover the ventilation slots. Otherwise, the appliance will overheat.

Energy Saving Tips

- Multiple-rack cooking saves time and energy. Whenever possible, cook foods requiring the same cooking temperature together in one oven.
- For optimal performance and energy savings, follow the guides for proper rack and pan placement.
- Reduce energy use by cleaning light oven soil.
- Avoid opening the oven door more than necessary during use.

Setting The Clock

When power is first supplied to the oven, the timer display will flash "00:00" and "Clock setting".
display . Enter the time by touching the number keypads. Then touch START to allow operation proceed as follow:

1 Touch **START** to set clock or touch **Clock**.

2 Choose 12 or 24 hours system according to the prompts: 1:12hr, 2: 24hr

3 Enter the correct time using the number keys.
1)12-hour system: choose AM or PM: 1:AM, 2:PM, then press the number keys to set the correct time.
2)24-hour system: press the number keys to set the correct time.

4 Touch **START** to confirm is complete setting.

NOTE

Press **CLEAR OFF** to cancel the clock and enter the standby status page.
12-hour system : If the hour is less than 10, the leading zero is not displayed; for example: 8:56 AM (8:56 in the morning)
24-hour system : If the hour is less than 10, the leading zero is displayed; for example: 08:56

Setting The Oven

Settings

The oven has additional settings which can be accessed and adjusted using the settings button. They remain in the control's memory until changed.

How to use:

1. Touch Settings. The oven display will scroll through the various options.
2. Touch the number keypad for the specific option to toggle the function setup. Use a following chart as a guide.

Option	Code	Function Description
Temp Units	1	Set temperature unit
Sound	2	Key sound switch
Error Code	3	Query for error codes that have occurred
Version	4	Version information query
DEMO Mode	5	Set oven demo mode
Compensation	6	±35°F (±19°C) (retained after power loss)
Sabbath	7	Set sabbath mode. (The cooking time can be set within 74 hours) Sabbath mode disables the oven lights (the oven light will not turn on when the door is opened), all sounds (the control will not beep when the screen is pressed). Sabbath mode can only be used with traditional Bake. This feature conforms to Jewish Sabbath requirements.
Factory Reset	8	Restore factory setting

Sabbath Mode

How to set Sabbath Mode:

1 Touch Settings.

2 Touch 7

3 Set the desired temperature.

To cancel Sabbath Mode, press **CLEAR OFF**.

4 Touch Cook time to set the desired time.

5 Touch Start to confirm.

Timer

In the standby or working state (except for the Sabbath mode) , how to set timer:

1 Touch **Timer/ Off (3 sec) .**

2 Touch number keypad to set the time.(hours and minutes).

3 Touch **Timer**.

The maximum allowed setting for the alarm operation time is 24 hours. Note that the alarm operation time needs to be set to be more than 1 minute for it to be effective.

Press and hold **Timer/Off (3 sec**) to turn off Timer.When the Timer countdown ends, a prompt sound lasts for one minute, displaying "Timing end". Then it switches to "Cooking" display (for example, if there is no "Cook time" display, it shows this).

NOTE

The Timer does not start or stop the oven.

To Lock Control:
Touch **Settings** (3 sec.) for 3 seconds, then the oven control is lock, when a lock icon appears in the display.

To Unlock Control:
Hold **Settings** (3 sec.) for 3 seconds, then the oven is unlock and the lock icon is remove.

General Operation Logic(Applies to Most Functions)

1.Activate Function: Press the function button (e.g., [Bake]) when the oven is in standby.
2.Set Temperature/Time:
- Temperature: Use number keys (default temp varies by function, see below).
- Time (Optional): Press [Cook Time] -> use number keys (default: 10hrs if not set; no time display if using default).

3.Start:Press [START]
4.Adjust During Cooking:
- Temperature: Use number keys -> Press [START] to confirm (oven keeps old temp until confirmed).
- Time: Press [Cook Time] -> number keys -> [START].

5.Confirmation Rules:
- "Press START" to Confirm "pops up if no [START] within 5 seconds of settings".
- Returns to standby if no action for 30 seconds (unless temperature is already set/confirmed).

6.End of Cooking:
When cooking is complete, the unit exits the operating mode.
The display shows "Cooking complete", and "End" will flash on the screen. The buzzer beeps every 3 seconds for 1 minute.
Opening the door or pressing the **CLEAR OFF** will return the oven to Standby Mode.

NOTE

Place food in the oven after preheating if the recipe calls for it. Preheating is very important for good results when baking cakes, cookies, pastry and breads. After the oven has reached desired temperature, it will automatically switch to Cooking Mode.

Specific Functions (Key Details Only)

Bake

- Default Settings: Temp=350°F(177°C) (flashes); Time=10hrs.
- How to use Bake:

1 Touch **Bake**.

2 Touch number keypads to enter the temperature.

3 Touch **Cook Time** .Touch number keypads to set the baking time.

4 Touch **START** to start cooking.

Conv Bake (Convection Bake)

- Default Settings: Temp=325°F(163°C) (flashes);Time=10hrs.
- How to use Conv Bake:

1 Touch **Conv Bake** .

2 Touch number keypads to enter the temperature.

3 Touch **Cook Time** . Touch number keypads to set the Convection Bake time.

4 Touch **START** to start cooking.

Convection Baking

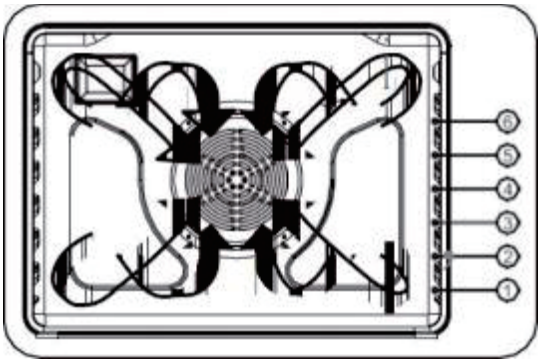

By using the Convection Bake, you will be able to cook faster. Convection baking uses a fan to circulate the oven's heat evenly and continuously within the oven. This improved heat distribution allows for even cooking and excellent results while using multiple racks at the same time. Foods cooked on a single oven rack will generally cook faster and more evenly with convection baking. Multiple oven rack cooking may have slightly increased cooking times for some foods, but the overall result is time saved. Breads and pastries brown more evenly. You can program the oven for convection baking at any temperature between 175 °F and 550 °F.

Tips for convection baking

The amount of time you save will vary depending on the amount and type of food you are cooking. When baking cookies or biscuits, you should use pans with no sides or very low sides to allow the heated air to circulate around the food. Using a pan with a dark finish will produce faster cooking times.

When using convection baking with a single rack, place the oven rack in position 3 or 4. If cooking on multiple racks, place the oven racks in position 3 and 5. When baking a cake, using the bake mode (not the convection bake mode) will produce better results.

Conv Roast

Convection roasting is good for cooking large tender cuts of meat uncovered. Heat comes from the top heating element. The convection fan circulates the heated air evenly over and around the food. Meat and poultry are browned on all sides as if they were cooked on a rotisserie. The heated air seals in juices quickly for moist and tender results while, at the same time, creating a rich golden-brown exterior.

- Default Settings: Temp=325°F(163°C) (flashes); Time= 10hrs (no time display initially).
- How to use Conv Roast:

1 Touch **Conv Roast** .

2 Touch number keypads to enter the temperature.

3 Touch **Cook Time** . Touch number keypads to set the Convection Roast time.

4 Touch **START** to start cooking.

- Adjust During Cooking:

-Temperature: Enter a new temperature directly using the numeric keypad, then press START to confirm; or press the Conv Roast key once → enter the new temperature using the numeric keypad → press START to confirm.

-Time: Press [Cook Time] ,enter new time, press [START] to confirm (reverts to old time after 30s of no action).

- End of Cooking: Auto-stops → "Cooking complete" + beeps every 3s for 1min returns to standby.

Air Fry

The Air Fry feature uses hot air for crispier and healthier frozen or fresh foods without any (or less than normal) oil compared to convection modes.

The Air Fry feature works best for single -rack baking with packaged and convenience foods. Make sure that you remove the packaging from food before cooking it. You can program for temperatures between 175 ° F and 500° F. Leave the oven light off when baking.

- Default Settings: Temp=425 °F(219°C)(flashes); Time = 10hrs (e.g., 15 mins for French fries)
- Critical Note: NO preheating -> press **[START]** to directly enter "Cooking" mode.
- How to use Air Fry:

1 Touch **Air Fry** .

2 Touch number keypads to enter temperature.

3 Touch **Cook Time** . Touch number keypads to set the Air fry time. Time can be set up to 1 minutes and 10hours.

4 Touch **START** to start cooking.

The oven display will count down the Air Fry time.
When the stop time is reached, the oven will shut off automatically and "Cooking complete" will appear in the display. If enable, end-of-cycle tones will sound, after the cycle ends, three consecutive beeps constitute one alert; a total of 8 alert sequences will sound ,or touch **CLEAR OFF** or open the door to clear the display and stop the reminder tones.
Note:

- This will help to reduce splatter and smoke.
- Before using a baking sheet, check the maximum temperature.
- Air Fry is designed for a single oven rack. Place food on rack position 3 for best results.
- For cooking fresh or foods, spread the oil over a larger area more evenly, for better crisping.

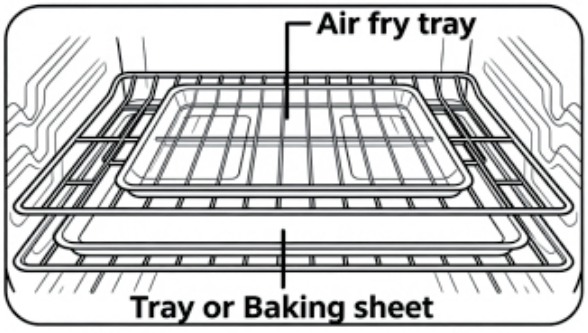

Air Fry Try recommended placement

Broil

Broiling is a method of cooking tender cuts of meat by direct heat under the broil element of the oven. The high heat cooks quickly and gives a rich, brown outer appearance. Broil mode is best for meats, fish, and poultry up to 1" thick.

- Default Settings: Heat level = Hi (flashes); Time = 3hrs (no time display).
- How to use Broil:

1 Touch **Broil** .

2 Select Hi or Low mode: 1: Hi, 2: Lo

3 Touch **START** to start cooking.

Keep Warm

- Default Settings: Temp=175 °F(79°C)(NOT adjustable); Time = 3hrs (if [START] pressed without setting time).
- How to use Keep Warm:

1 Touch **Keep Warm** .

2 Touch **Cook Time** . Touch number keypads to set the Keep Warm time.

3 Touch **START** to start cooking.

OPERATING THE OVEN

Pizza

How to use Pizza:

1 Touch **Pizza**.

2 Touch number keypads to enter temperature. The temperature can be set between 175 °F and 550°F.

3 Touch **Cook Time** . Touch number keypads to set the pizza time. Time can be set up to 1 minutes and 10hours.

4 Touch **START** to start cooking.

The oven starts to preheat until preheat complete, a beep will sound and the oven display will countdown the Pizza time if you set.

When the stop time is reached, the oven will shut off automatically and "Cooking complete" will appear in the display. If enable, end-of-cycle tones will sound, it ends automatically in one minute or touch **CLEAR OFF** or open the door to clear the display and stop the reminder tones.

Tips: You can touch **START** directly without entering the time of cooking, after setting the cooking temperature. The oven will work for the maximum safe time, at which time the cooking time will not be displayed.

Proof (Dough Fermentation)

- Default Time: 10hrs (set time via [Cook Time]+ number keys if needed).
- How to use Proof:

1 Touch **Proof**.

2 Set the temperature.
·F mode: Press "1"for 85 °F, "2" for 95°F(default =85°F).
·C mode: Press "1"for 30 °C, "2" for 35 °C(default=30°C).

3 Touch **Cook Time** . Touch number keypads to set the Proof time.

4 Touch **START** to start cooking.

Delay start (Scheduled Cooking)

- Prerequisite: First set temperature + Cook Time for your function if you need (e.g., Bake) -> DO NOT press [START] yet.
- How to use **Delay Start** :

1 Press **Delay Start.**

2 Use number keys to set delay time.

3 Touch **START** to start cooking.

Oven Food Probe (Only for Bake/Conv Bake/Conv Roast)

- How to use **Oven Food Probe** :

1 Insert Probe: Plug into oven port (probe icon lights up) -> do this in standby or after preheating.

2 Set Probe Temp:
-Press [Bake]/[Conv Bake]/[Conv Roast] -> display shows probe icon + prompts "Enter temperature".
-Default probe temp=150°F(66°C) -> use number keys to adjust -> press [START].

3 Set Oven Temp:

- Display switches to function name (e.g., "BAKE") -> default temp: 350°F[177°C) for Bake;325°F(163°C) for Conv Bake/Conv Roast.
- Use number keys to adjust (max temp=482°F/250°C)

4 Touch **START** to start cooking.

Time (Optional): Press [Cook Time] -> number keys [START] (default =10hrs).

- End Condition: Auto-stops when countdown ends OR food reaches probe temp.

How to use the temp probe into the meat:

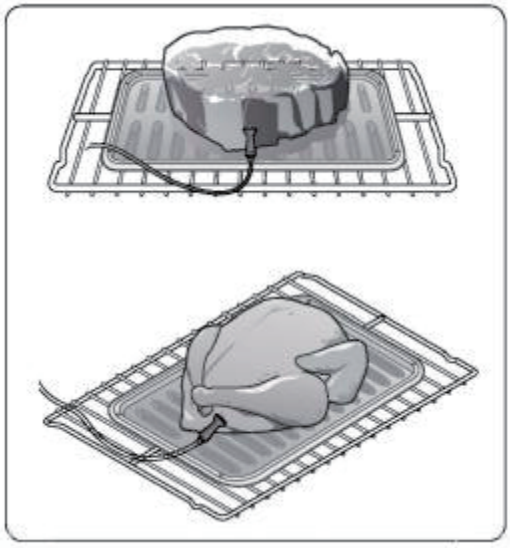

Insert the probe completely into the meat as shown in the illustrations. It should not touch bone, fat, or gristle.

If you do not fully insert the probe into the meat, the Temp Probe function will not work correctly because the probe will sense the oven temperature, not the temperature of the meat.

For bone-in meats, insert the probe into the center of the lowest and thickest portion of the piece.

For whole poultry (turkey, large chickens, etc.),

insert the probe into the thickest part of the inner thigh, parallel to the leg.

CAUTION

- To protect the Temp Probe 's tip, be careful not to insert the probe so that the tip protrudes through the surface of the meat. Make sure that the tip is in or near the center of the meat.
- Do not store the probe in the oven.
- Do not leave the probe inside the oven during a self-clean or broiling cycle, as you can permanently damage the probe and it will no longer work.
- To avoid breaking the probe's tip, defrost your food completely.
- Do not use tongs when inserting or removing the probe. Tongs can damage the probe.
- Use the Temp Probe for Temp. Probe function cooking only. Do not use the Temp Probe for any other purpose.
- If you remove the Temp Probe while the Temp. probe function is operating or insert the Temp Probe while baking or cooking normally, cooking will stop after 1 minute.

Temp Probe table

Available Temperatures	100 to 210 °F

Type of Food		Internal Temperature
Beef / Lamb	Rare	120°F
	Medium	130°F
	Well Done	140°F
Pork		160°F
Poultry		165°F

Note:

- If you cover meat with foil and allow to rest for 10 minutes after cooking , the internal temperature will rise an additional 5 °F to 10 °F.
- Removing the Temp Probe .
- Remove the temp probe plug from the socket.

CAUTION

After cooking, the Temp Probe will be hot enough to cause burns.

Self Clean

This self-cleaning oven uses high temperatures to burn off left over grease and cooking residue and completely reduce them to a fine powdered ash that can be wiped away with a damp cloth after cycle has completed and oven has cooled.

How to use **Self Clean** :

1 Touch **Self Clean.**

2 Select Self Clean time: 1: 3hr, 2: 5hr

3 Touch **START** to start Self Clean.

NOTE:

- After the self-clean cycle is complete, the oven door remains locked until the internal temperature cools to below 500°F (260°C).

- Self clean cycle will only clean areas where the heat can reach. Areas along the door frame, gasket area and inner door will have to be cleaned by hand after cleaning cycle has finished.
- During self-clean, exterior surfaces may get hotter than usual, so children should be kept away. If canceled, the door stays locked until the unit cools to a safe temperature level.
- Turning a unit off during self-clean is discouraged. Damage can occur if self-clean does not complete.

When the cooking time ends, the oven will stop operating, a buzzer will sound, and a pop-up notification will indicate that cooking is complete. (Cooking timedoes not include preheating time.)

- To change the cooking temperature, tap the temperature value in the center of the display screen to adjust it, then press START. The oven will operate with the updated settings.
  If you want to change the cooking time, you need to touch COOK TIME on the right side of the display screen to update, then touch START. The oven will operate with the updated settings. Convection Fan turns off when the oven door is opened to prevent unwanted heat escape. If the oven door is left open for more than one minute, the heating elements willturn off.
- If you want to change the cooking temperature, you need to touch the temperature value in the middle of the display screen to update, then touch START. The oven will operate with the updated settings.
- If you want to change the cooking time, you need to touch COOK TIME on the right side of the display screen to update, then touch START . The oven will operate with the updated settings.
- Convection Fan turns off when the oven door is opened to prevent unwanted heat escape. If oven door is left open for more than one minute heating element will turn off.

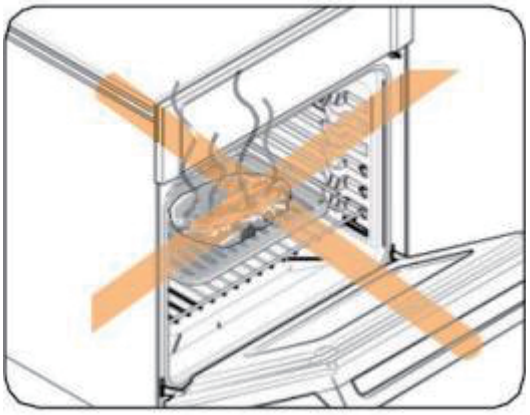

CAUTION!

Always broil with the oven door closed. Use care when opening the door. Let hot air from steam escape before you remove food.

Minimum and maximum settings

All the features listed in the table below have minimum and maximum time or temperature settings. A beep will sound each time a pad on the control panel is pressed and the entry is accepted. An error tone will sound in the form of a long beep if the entered temperature or time is below the minimum or above the maximum setting for the feature.

Feature	Min.Temp ./ Time	Max.Temp ./Time	Default
Bake	175°F(79°C) 0:01 hr/min	550°F(287°C) 10:00 hr/min	350°F(177°C)
Convection Bake	175°F(79°C) 0:01 hr/min	550°F(287°C) 10:00 hr/min	325°F(163°C)
Broil Hi/Lo	Lo 400°F(204°C)	Hi 550°F(287°C)	Hi 550°F(287°C) 3:00 hr/min
Convection Roast	175°F(79°C) 0:01 hr/min	550°F(287°C) 10:00 hr/min	325°F(163°C)
Pizza	175°F(79°C) 0:01 hr/min	550°F(287°C) 10:00 hr/min	425°F(219°C)
Proof	85°F(30°C) 0:01 hr/min	95°F(35°C) 10:00 hr/min	85°F(30°C)
Air Fry	175°F(79°C) 0:01 hr/min	500°F(260°C) 10:00 hr/min	425°F(219°C)
Keep Warm	0:01 hr/min	3:00 hr/min	175°F(79°C)
Self Clean	3:00 hr/min	5:00 hr/min	3:00 hr/min
Probe	100°F(38°C)	210°F(99°C)	150°F(66°C)
Sabbath	175°F[79°C) 0:01hr/min	550°F(287°C) 74:00 hr/min	350°F[177°C)

Oven Rack Positions

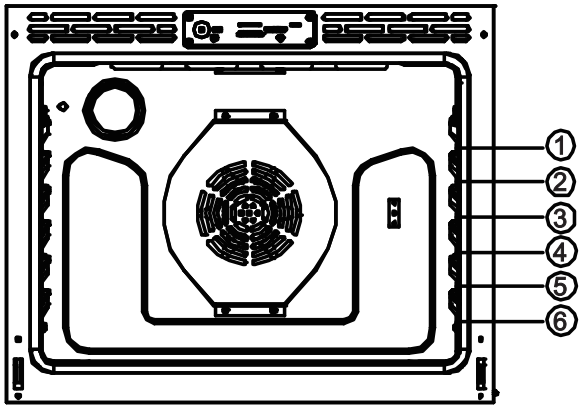

Type of Food	Rack Position
Broiling of Hamburgers.	6
Broiling meats or small cuts of poultry and fish.	3 to 5
Bundt Cakes, Pound Cakes, Frozen Pies, and Casseroles.	4 or 3
Angel Food Cakes, Small Roast	2
Turkey, large Roast, Hams Fresh Pizza	1

Rack and Pan Placement

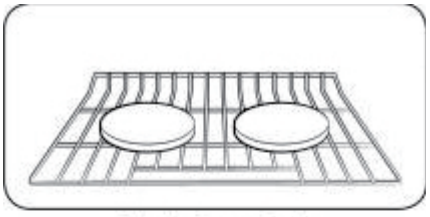

Single Oven Rack

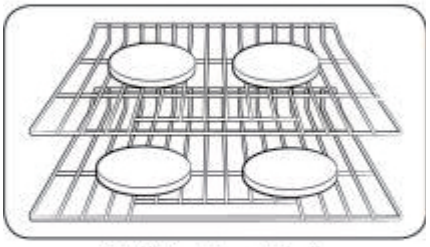

Multiple Oven Rack

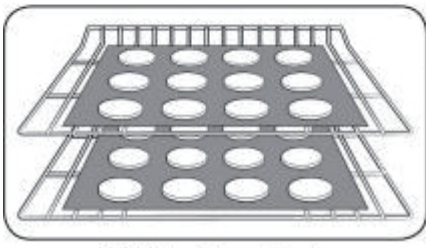

Multiple Oven Rack

Centering baking pans in the oven as much as possible will produce better results. If baking with more than one pan, place the pans so each has at least 1" to 2" of air space around it. When baking on a single oven rack, place the oven rack in position 3 or 4.

When baking cakes and cookies on multiple racks, place the oven racks in position 3 and 5. Using the convection fan will provide best air movement with multi-level rack cooking.

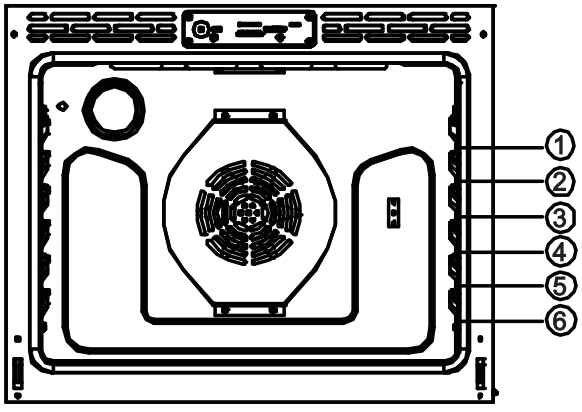

Before using the racks

Each rack has stops that need to be placed correctly on the supports. These stops will keep the rack from coming completely out.

REMOVING THE RACKS

1. Pull the rack straight out until it stops.

2. Lift up the front of the rack, and then pull it out.

REPLACING THE RACKS

1. Place the end of the rack on the support.

2. Place the front end up and push the rack in.

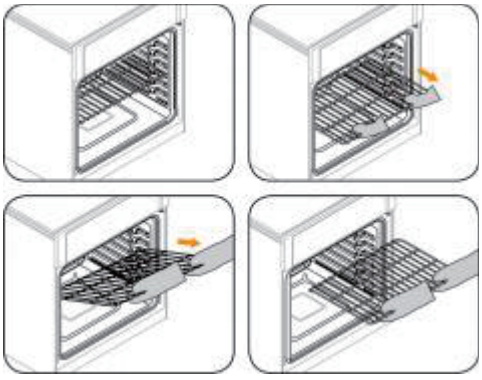

CAUTION

- Do not cover a rack with aluminum foil or place aluminum foil on the oven bottom. This will hamper heat circulation, resulting in poor baking, and may damage the oven bottom.

- Arrange the oven racks only when the oven is cool.

REPLACING OVEN CAVITY LIGHT BULB

- Turn off power to the oven at the circuit breaker.
- Make sure the oven cavity is cool to the touch.Do not attempt to change light bulb when the oven is hot.
- Grasp oven light lens cover and unscrew the light lens by turning it counter-clockwise direction.
- Remove the light lens and set it aside
- Remove light bulb from the socket by pulling the light bulb towards front of the oven.
- Replace the oven light bulb with a 120Vac 40watt G9 base Halogen light bulb. Do not handle the halogen bulb with bare hands. Use a cloth or glove when removing and inserting the bulb

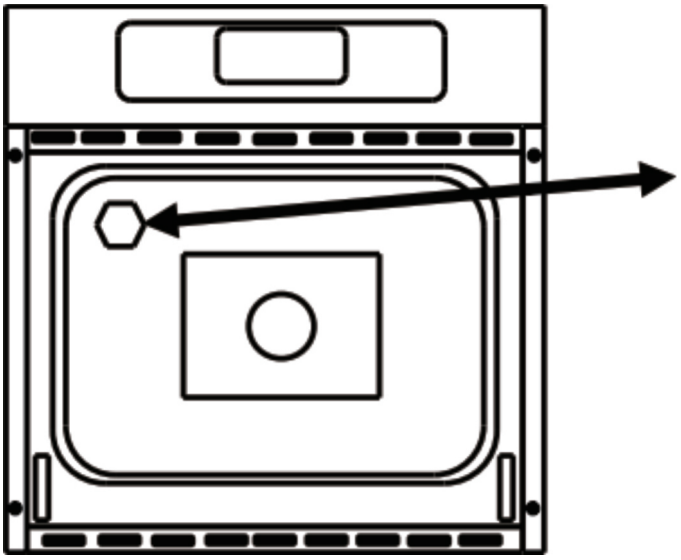

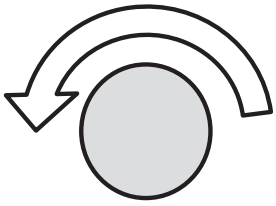

Turn oven light lens counter clockwise to unscrew.

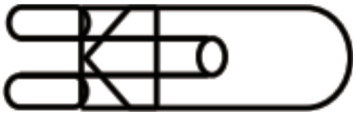

Replace light bulb with 120Vac 40 watt G9 base halogen bulb.

CLEANING THE OVEN EXTERIOR

For general cleaning, use a soft cloth with hot soapy water. For more difficult soilsand built up grease apply liquid detergent directly onto the soil. Let detergent sit for 30 to 60 min and then rinse with a damp cloth. Do not use abrasive cleaners as they can scratch oven surfaces.

CLEANING STAINLESS STEEL SURFACES

- DO NOT use steel wool or any other abrasive type material to clean the stainless steel surfaces.
- Use a stainless steel cleaner or stainless steel polish cleaner with a soft cloth.
- Clean the stainless steel by moving the cloth in the direction of the grain of the stainless steel panel being cleaned.Note: Do not clean using swirling motions or going across the grain
- Once the cleaner has dried, buff the surface with a soft, dry microfiber towel, moving along the grain of the stainless steel.

CLEANING THE BROILER PAN AND GRID

- Broil pan and grid can be cleaned by washing in hot soapy water, For burnt on material allow pan and grid to soak in hot water to soften material.

CLEANING THE OVEN DOOR

- Use soap and water with a dish cloth to thoroughly clean.
- Glass cleaner can be used on the exterior glass only.
- Do not spray or allow water near the oven vents at the top and bottom of the door, Doing so will allow liquid to seep between the layers of glass inside the door, resulting in streaks and spots on the interior glass surface
- Do not clean the oven door gasket.Doing so will cause damage to the gasket.

Troubleshooting

THOR Kitchen works hard to ensure that you don't have problems with your new electric wall oven.If you run into unexpected trouble, look first for a solution in the tables below. If you are still having trouble after trying the suggested solution, call THOR Kitchen at 1-877-288-8099.

Problem	Possible solution
Oven control beeps and displays F and number	• The electronic control has detected a fault . • Press the CLEAR OFF key to clear display. • Reprogram cycle and try again. If error continues, turn off power to the oven for 5 min via the circuit breaker. After 5 min, turn on power and retry . • If error continues, contact a qualified service technician.
No power / No display	• Power outage. Check other items in the house such as lights. • Check house circuit breaker.
Oven cavity light doesn't turn on	• Replace oven cavity light bulb.
Food is not baking or roasting properly	• Oven control was not set correctly- go to the Operating the Oven section of the user manual. • Rack position being used is not correct - Go to the Operation the the Oven section of the user manual . • Incorrect cookware or cookware of improper size being used- Go to the operating the Oven section of user manual. • Temperature adjustment needed. See the temp adjustment subsection of the "Operating the Oven" section of the manual.
Food is not Broiling correctly	• Oven controls improperly set. - Make sure Broil function is selected. • Improper rack position being used.See the broiling subsection of the "Operating the Oven" section of the manual . • You may be using cookware that is not suited for broiling. Use the broil pan that came with the oven.

TROUBLESHOOTING

Problem	Possible solution
Oven smokes during broiling	• Food product is placed to close to broil element. • Rack position is incorrect. • Food product not properly prepared, Remove excess fat from cuts of meats, Trim fatty edges to prevent curling. • Incorrect cookware used .use the supplied broiler pan to allow the grease to drip below the slots. • Grease has built up on oven cavity surfaces. Regular cleaning is required when doing heavy amounts of broiling due to grease splatter.
Oven temp is too hot or too cold	• Oven temp sensor off set needs to be adjusted. • See manual temp adjust. Oven Temp can be increased or decreased by 35°F.
Cracking / popping sounds	• These sounds are normal. As metal heats and cools, there will be expansion and contractions sounds during the heating process .
Oven is not clean after a self clean	• The oven control may not be set correctly or for a sufficient cleaning cycle. Use a 5 -hour cycle for heavy soil and a 3 -hour cycle for normal soil. • The soil level in the oven may be too high. Self clean more frequently. • Clean up heavy spills over before starting the clean cycle. • Oven may need a second self clean cycle if there was heavy soiling present during the previous self clean cycle.
Excessive smoking during self-clean cycle	• Excessive soil in oven cavity. • Cancel the cleaning cycle, open windows, and turn on the exhaust hood to ventilate and remove smoke. Allow the oven to cool and the door to unlock. Remove excess soil from the cavity, then restart the self -clean cycle.
Burning or oily odor emitting from the oven and vents	• This is normal for a new oven and will dissipate with use. • Run the oven prior to first use following the seasoning process outlined in the BEFORE YOU BEGIN section of owners manual.

Problem	Possible solution
Cooling fan runs after the oven is turned off	• This is normal, the cooling fan will continue to run until the oven has cooled below 165°F. Once it has cooled below this temperature it will automatically turn off.
Warm air is venting out from below the door	• This is normal, the oven cooling fan will draw cool air in through the oven door and this air will be cycled over the top and back of the oven. The warm air will be vented out the bottom vent of the oven into the kitchen.

Error Code

Error Code	Error Description	Solutions
F1E1	Communication failure	Restart the oven. If the problem persists, disconnect all power to your oven for at least 30 seconds. Then, reconnect the power. If this does not solve the problem, call for service.
F1E3	The control board does not match the main control board model	
F1E4	Communication failure between the control board and the left touch panel	
F1E5	Communication failure between the control board and the right touch panel	
F3E3	The oven temperature is overheated	
F3E1	Open/closed circuit of the oven temperature sensor	
F3E2	Oven temperature rise failure	
F3E5	PCB board overheating	
F3E4	PCB temperature sensor failure	
F3E7	Overheating of the temperature controller	
F3E6	Food probe failure	
F4E1	MCU self-check failure	

TROUBLESHOOTING

Error Code	Error Description	Solutions
F5E1	Door lock failure	Restart the oven. If the problem persists, disconnect all power to your oven for at least 30 seconds. Then, reconnect the power. If this does not solve the problem, call for service.
F5E2	Door switch failure	
F6E1	Cooling/hall/low/high gear failure	
F6E5	Clock chip communication failure	

THOR KITCHEN®

Warranty&Service

This appliance has been manufactured by Thor International, 10830 Ada Ave, Montclair, CA 91763 United States.

For Customer Service, please call (877) 288 - 8099

For the most up to date warranty and service policy, please refer to our website WWW.THORKITCHEN.COM/WARRANTY-REGISTRATION

For in-warranty service requests, please visit our website at WWW.THORKITCHEN.COM/SERVICE

Please Note: You must provide proof of purchase or installation date for any in-warranty service requests

We Stand Behind the Quality of Our Appliances.

Reliability and customer satisfaction are our top priorities. We offer a solid two-year warranty on both parts and labor. Enjoy professional-grade performance with the confidence that we've got you covered.

Warranty Registration Made Easy.

01 Scan the QR Code or visit thorkitchen.com/register-your-product.

02 Input your purchase and product information and select register.

03 That's it. You're all set. Enjoy!

Questions: service@thorinternational.com

WARRANTY

PARTS