Harvey Building Products
Slimline Single Hung
I-Fin w/ Flat Casing and Sill Nose
(1/2 Scale)

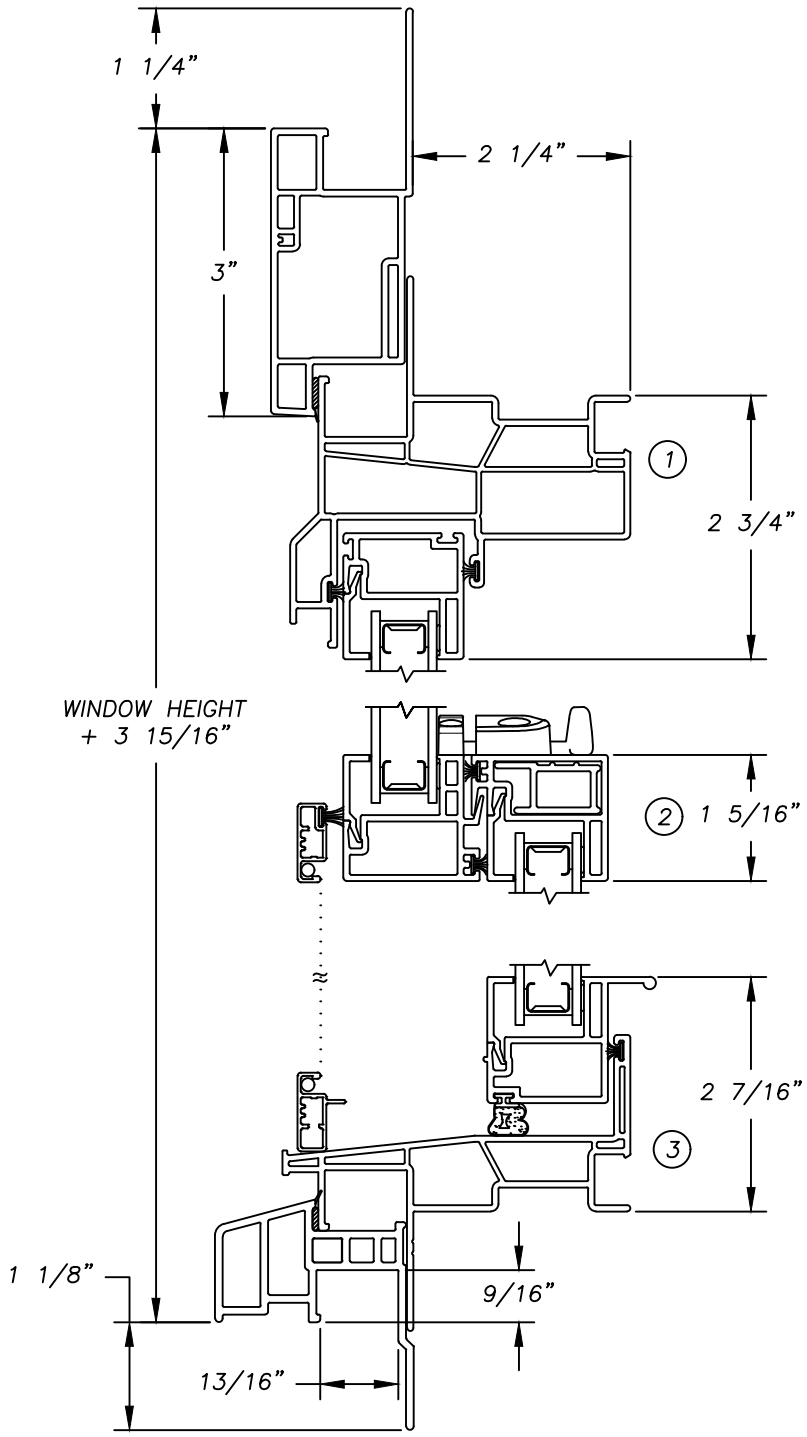

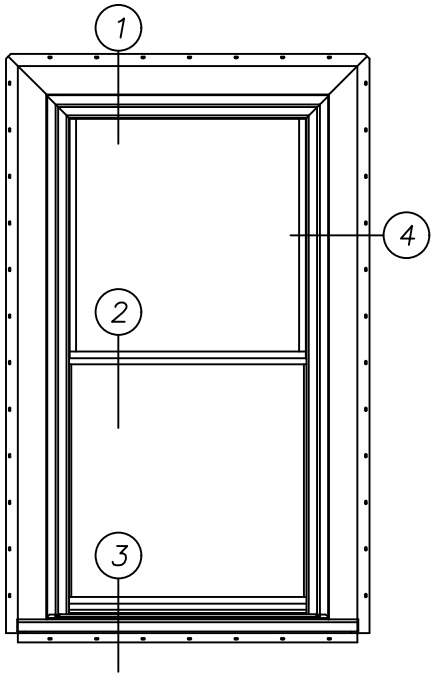

(1/20)

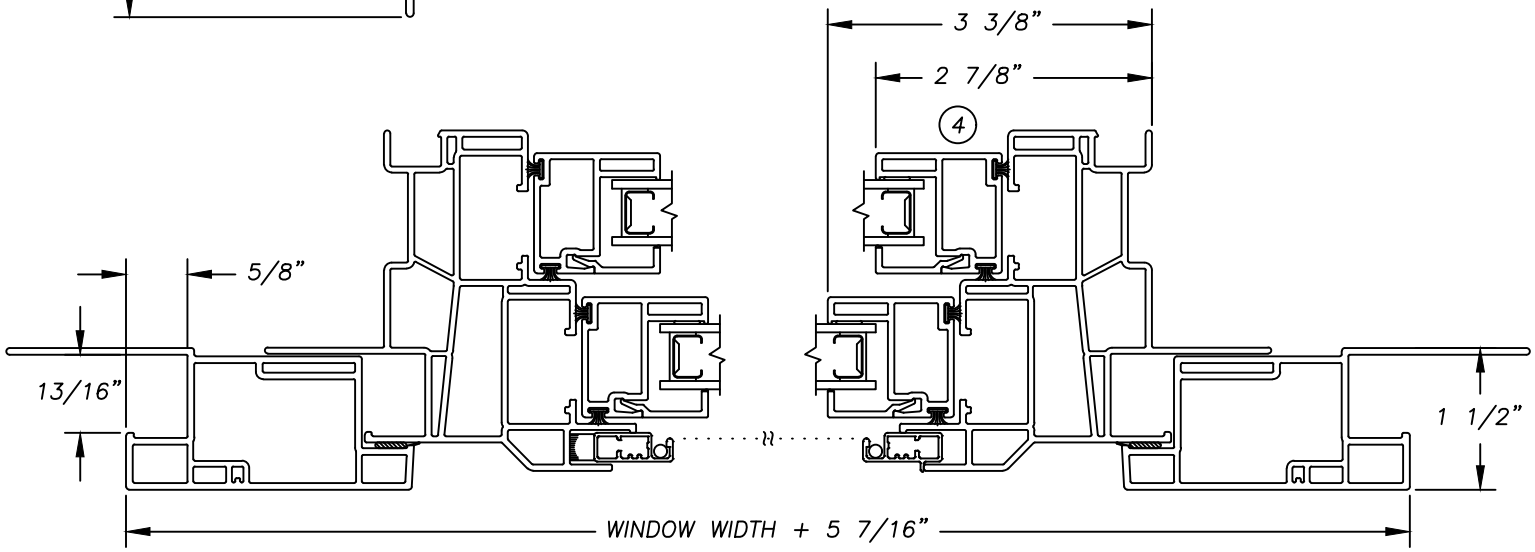

REV. 10/20

AS 349