Harvey Building Products
Vinyl Picture Window NC
w/ 908 Casing & Sill Nose

(1/2 Scale)

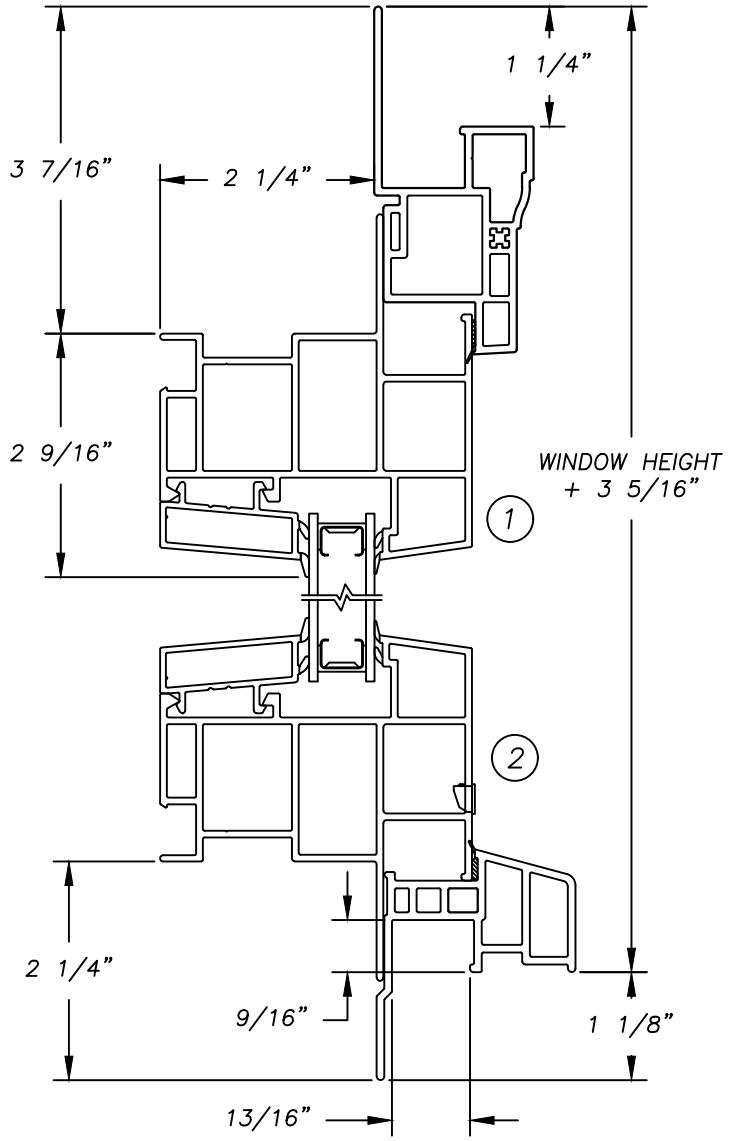

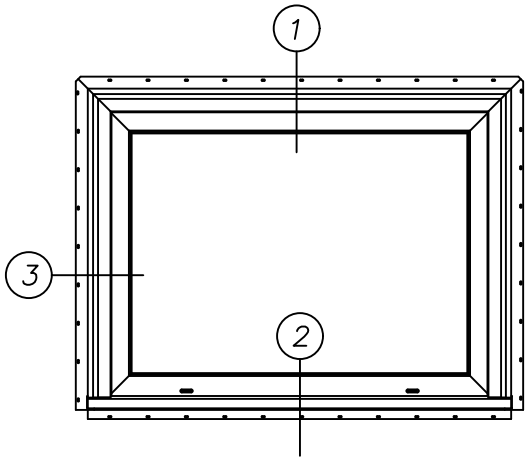

(1/20)

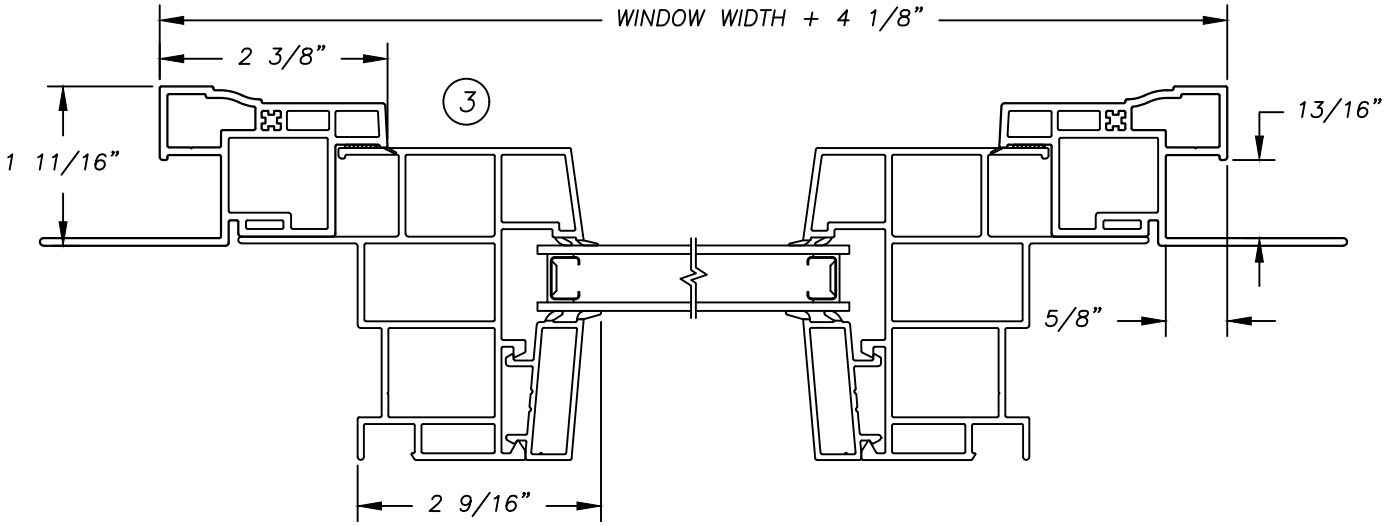

REV. 10/28/15

AS 475