Mitutoyo

MEASURING INSTRUMENTS CATALOG

US-1006

Notes on Use

Export Compliance

All products in this catalog are subject to the Foreign Exchange and Foreign Trade Control laws of Japan, US Export Administration Regulations (EAR) or the Canadian Export and Import Permits Act. Re-export or relocation of any of these products may require prior approval by an appropriate governing authority. If a purchased product is exported or re-exported, even if it is not considered a regulated item by a governing authority, Mitutoyo would like to be made aware, as the customer service available for that product may be affected. If you have any questions, please consult your local Mitutoyo sales office.

Safety Caution

Carefully read the specifications and functions in this catalog before selecting products. Safety may be compromised if you use products for purposes other than those stated here.

Feel free to contact your nearest Mitutoyo sales center if you wish to use a product for other purposes or in a special environment.

Appearance and Specifications

Appearance and specifications are subject to change without prior notice for product improvement. The product names in this catalog are registered trademarks or trademarks of Mitutoyo or their respective companies.

Mitutoyo Precision Measuring Machines Trusted Throughout the World

Table of Contents

		Pages
A	Measurement Data Management	A-1 – 32
B	Micrometers	B-1 – 78
	Micrometer Heads	B-79 – 124
C	Holtests	C-1 – 12
	Borematic	C-13 – 16
	Inside Micrometers	C-17 – 30
	Bore Gages	C-31 – 58
D	Calipers	D-1 – 48
	Height Gages	D-49 – 64
	Depth Gages	D-65 – 84
E	Gage Blocks	E-1 – 25
	Height Master & Check Masters	E-26 – 31
	Reference Gages	E-32 – 46
	Granite Surface Plates	E-47 – 48
F	Digimatic Indicators	F-1 – 24
	Dial Indicators	F-25 – 74
	Dial Test Indicators	F-75 – 86
	Indicator Calibration	F-87 – 88
	Thickness Gages	F-89 – 94
	Caliper Gages & Tension Gages	F-95 – 100
	Stands	F-101 – 110
G	Linear Gages	G-1 – 19
	Litematic	G-20
	Mu-checker	G-21 – 25
	Non-contact Sensors	G-26 – 30
	Laser Scan Micrometers	G-31 – 42
H	Digimatic Scale Units	H-1 – 6
	Quill Kit	H-7
	Linear Scales	H-8 – 24
I	Profile Projectors	I-1 – 16
	Microscopes	I-17 – 40
J	Surftest	J-1 – 7
	Contracer	J-8
	Formtracer	J-9 – 20
	Roundtest	J-21 – 22
	Roundtracer	J-23 – 24
K	Hardness Testing Machines	K-1 – 8
	Rockwell Hardness Testing Machines	K-9 – 13
	Portable Hardness Testing Machines	K-14 – 18
L	Coordinate Measuring Machines	L-1 – L-12
	Software and Probes	L-13 – 19
	Accessories	L-20 – 26
M	Vision Measuring Systems	M-1 – 15
N	INDEX	N-1 – 10

Mitutoyo

Mitutoyo North America Operations

Mitutoyo America Corporation
Corporate Headquarters
Aurora, Illinois USA

Aurora
965 Corporate Blvd
Aurora, IL 60502
(888) 648-8869
M³ Solution Center
Calibration Lab
Mitutoyo Institute of Metrology
CT Lab
Repair and Field Service
Contract Part Programming and Contract Inspection

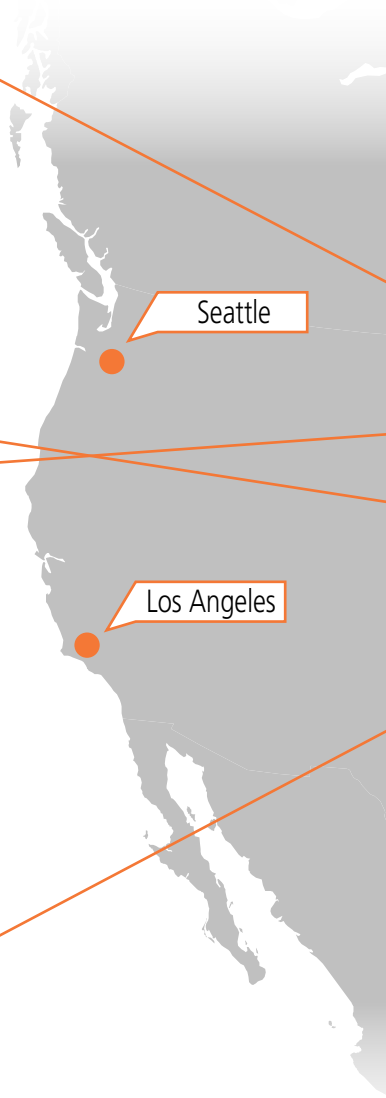

Mitutoyo America Corporation

Established in 1963, Mitutoyo America Corporation has locations all across the United States and Canada, including corporate offices, sales offices, M³ Solution Centers, calibration and repair laboratories, and research and development facilities. Mitutoyo America offers a full product line of precision measuring tools, instruments and equipment. Mitutoyo also provides comprehensive metrology services including product and technical support, state-of-the-art calibration and repair services, unmatched education and training programs and cutting-edge research and development.

As the leading metrology company in the world, Mitutoyo is committed to future product development that applies breakthrough technologies to its full range of dimensional measurement tools, instruments and systems. With the belief that providing high-quality metrology goods and services to its customers will, in turn, allow its customers to provide high-quality product to theirs. Mitutoyo continues to develop the most accurate and advanced metrology equipment available, all of which are made in our own manufacturing facilities.**"Precision is our profession."** is not just the company motto, but also the principle by which every Mitutoyo employee stands by when serving our customers.

Mitutoyo Canada Inc.
Corporate Headquarters
2121 Meadowvale Blvd.
Mississauga, Ontario Canada
(905) 821-1261

Laval
5539 Ernest-Cormier Street, Unit B
Laval, Quebec Canada
H7C 2S9
M³ Solution Center

Toronto
2121 Meadowvale Blvd.
Mississauga, Ontario Canada
L5N 5N1
M³ Solution Center
Calibration Lab
Contract Part Programming and Contract Inspection

M³ Solution Centers

Mitutoyo tools and instruments can be seen and demonstrated conveniently at any one of eight Mitutoyo M³ Centers nationwide. These centers are fully equipped featuring operational models of the latest Mitutoyo tools and instruments. By appointment or walk-in basis, product demonstrations at M³ Solution Centers are carried out by our experienced, highly trained staff. Contact your Mitutoyo distributor or the Mitutoyo regional office near you for more information.

Mcube

*M³ = Mitutoyo, Measurement, Metrology

Mitutoyo Mexico
Corporate Headquarters
Electrical Industry 15 Industrial Park,
Naucalpan de Juárez, Mexico 53370
(0155) 5312-5612

Boston
753 Forest Street, Suite 110
Marlborough, MA 01752
M³ Solution Center

Charlotte
11515 Vanstory Drive, Suite 140
Huntersville, NC 28078
M³ Solution Center

Cincinnati
6220 Hi-Tek Court
Mason, OH 45040
M³ Solution Center

Ohio
8876 Beckett Road
West Chester, Ohio 45069
Contract Part Programming and Contract Inspection

Detroit
46850 Magellan Dr., Suite 100
Novi, Michigan 48377
M³ Solution Center

Houston
4560 Kendrick Plaza Dr., Suite 120
Houston, TX 77032
M³ Solution Center

Lakeland
3150 County Line Road, Suite 1
Lakeland, FL 33811
M³ Solution Center
Contract Part Programming and Contract Inspection

Los Angeles
16925 East Gale Ave.
City of Industry, CA 91745
M³ Solution Center
CT Lab
Repair and Field Service
Contract Part Programming and Contract Inspection

Seattle
1000 SW 34th Street, Suite G
Renton, WA 98057
M³ Solution Center
CT Lab

1934

The Birth of Mitutoyo Manufacturing

In 1934, founder Yehan Numata began developing domestic production of micrometers, which were almost entirely imported at the time. This marked the first step for Mitutoyo.

1936

First Micrometer - Kamata Factory

The company completed its first mass production lot of 100 units, but only 17 were deemed perfect. The remaining 83 units were buried on the factory grounds, reinforcing a commitment to uncompromising quality and precision.

1940

First Mass Production Plant

The Mizonokuchi Plant in Kawasaki, Kanagawa was established and began mass production of micrometers.

1949

1952

1954

1955

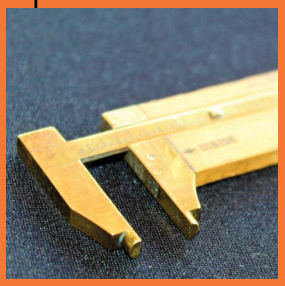

Caliper Production Begins

The simplified caliper and the vernier caliper are in widespread use after WWII.

Indicating Micrometers and Snap Meters

Production of indicating micrometers and snap meters begins.

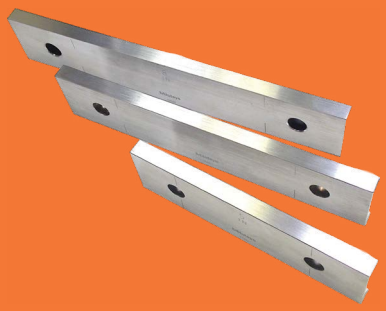

Gage Blocks Introduced

After years of research and development, Mitutoyo introduced gage blocks to the market in 1955.

SHIN NICHI BEI—Los Angeles, Sun., Nov. 7, 1954 3

PRECISION INSTRUMENT MAKER Keikan Numata, head of the largest precision instrument manufacturing firm in Japan, is currently in the U.S. to open a distributorship for his precision tools. Here he displays some of the instruments made by his firm, Mitutoyo Mfg. Co. —Shin Nichi Bei Photo

Global Expansion and Overseas Growth

From its inception, Mitutoyo aimed for global reach. In 1954, Yehan Numata represented Japan at an international measurement exhibition in the United States, helping to define where Mitutoyo was positioned in the global market.

1959

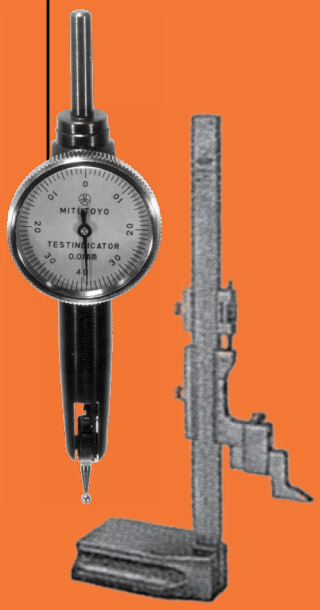

Dial Indicators and Height Gages

Production expands to include dial indicators and height gages.

1962

Surface Roughness Testers

Surface roughness testers are introduced, expanding measurement capabilities.

1963

First Overseas Expansion

Mitutoyo establishes its first overseas base, MTI Corporation, in New York City, becoming one of the first Japanese companies to enter the U.S. market after World War II.

1964

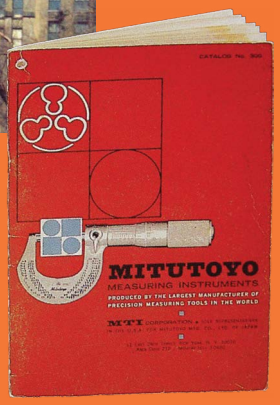

Catalog No. 300 Introduced

The first MTI catalog, No. 300, is published, introducing the height gage and dial caliper.

U.S. Government Adoption

The U.S. Department of Defense purchases 12,000 micrometers and test indicators.

1969

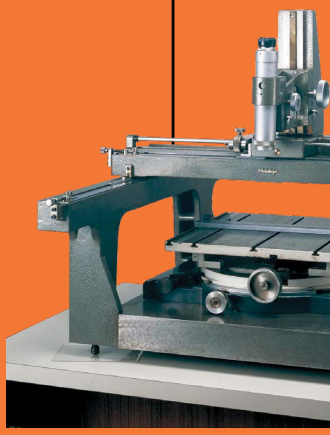

Coordinate Measuring Machine (CMM)

The first Mitutoyo CMM is developed, without digital display or computer interface.

1970 1971

Trade Show Expansion

Mitutoyo participates in major industrial trade shows across the United States and Canada, strengthening market presence.

Global Trade Show Presence

Trade shows become a critical channel for launching new products and expanding market reach.

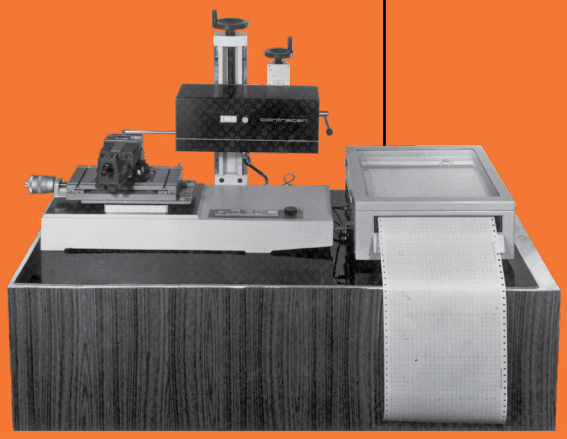

Contour Measurement Innovation

The world's first contour measuring instrument, the Contracer, is developed.

Digital Measurement Advancements

The Digit-Micrometer series and Digital Count-Hite are introduced.

1973

1975

1978

1980

1983

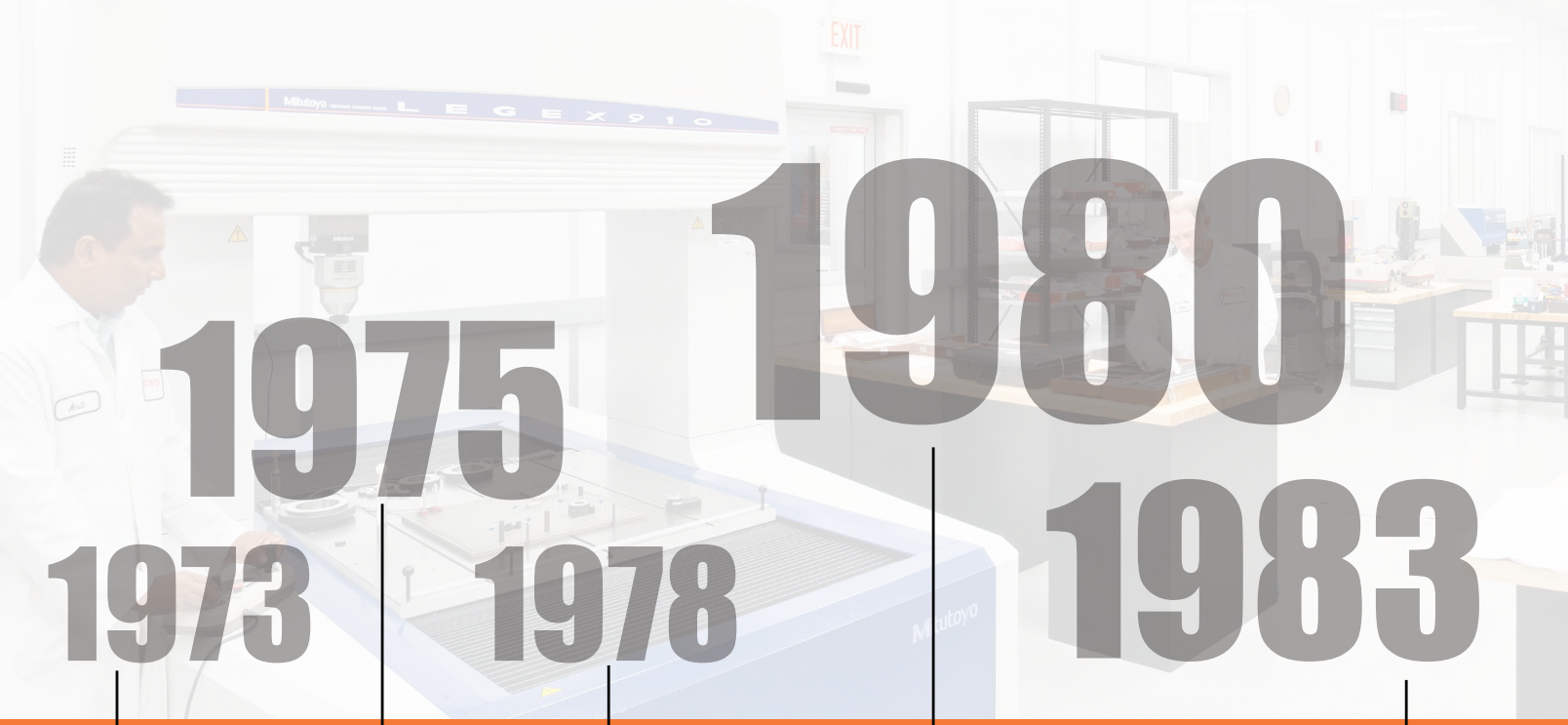

Institute of Metrology Established

The Mitutoyo Institute of Metrology is established in Japan and later expands globally to support education and training.

Digital Micrometer Introduced

The first generation of Mitutoyo digital micrometers is introduced, advancing measurement technology.

First Canadian Subsidiary

MTI Canada Limited is established in Montreal, marking the first subsidiary of MTI Corporation.

U.S. Mint Installation

A Mitutoyo Contracer is installed at the U.S. Mint in Philadelphia under strict security, highlighting precision and trust.

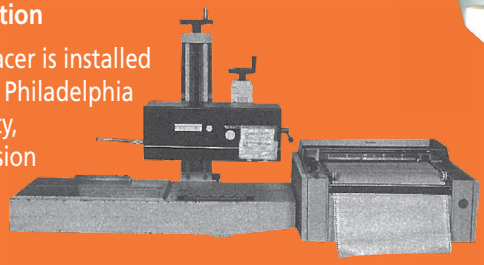

Digimatic Caliper Production

Production of the Digimatic Caliper begins, setting a new standard for digital measurement tools.

1984

50th Anniversary Milestone

Mitutoyo Japan celebrates its 50th anniversary, marking decades of innovation and growth.

1987

Non-Contact CMM Technology

Production of non-contact coordinate measuring machines expands measurement capabilities.

2013

Mitutoyo America Expansion

Mitutoyo America celebrates 50 years with the opening of a new headquarters and calibration lab in Aurora, Illinois.

2024

90 Years of Mitutoyo

Mitutoyo Japan celebrates 90 years as a global leader in precision measurement, continuing its commitment to quality and innovation.

World-Class Calibration and Repair Services

M³ Solution Centers

Experience all Mitutoyo precision instruments, tools, equipment, services and more at Mitutoyo M³ Solution Centers located across the United States and Canada. Each Mitutoyo M³ Solution Center is staffed with highly skilled and experienced Mitutoyo application engineers and product specialists available to answer any questions you may have regarding Mitutoyo products and services. The Mitutoyo application engineers also provide hands-on demonstrations, offer training on all Mitutoyo tools, instruments and equipment, and can work with you to develop application-specific measurement solutions.

Repair Services

Mitutoyo America Corporation provides comprehensive repair services designed to restore precision measuring equipment to factory-level performance while minimizing downtime. Our factory-trained technicians service tools using factory parts, ensuring accuracy and reliability across handheld instruments, gages, and advanced systems like CMMs and vision equipment. Mitutoyo repair services extend equipment life and help reduce the total cost of ownership for manufacturers.

Calibration Labs

Mitutoyo America operates two calibration labs in Aurora, Illinois, and City of Industry, California, accredited to ISO/IEC 17025 by A2LA (American Association for Laboratory Accreditation). In addition, Mitutoyo Canada operates an ISO/IEC 17025-accredited calibration lab in Mississauga, Ontario, also accredited by A2LA. Together, these facilities offer one of the broadest calibration scopes of any commercial laboratory in North America, supporting a wide range of measuring devices and dimensional artifacts. This includes small hand tools, surface finish specimens, gage blocks, step gages, cylindrical squares, and roundness hemispheres.

Field Services

Mitutoyo Field Services features highly trained engineers who perform on-site installation, repairs, and A2LA-accredited calibration of all Mitutoyo precision measurement instruments and equipment. Members of the US-based Field Services team can get equipment back into production quickly and can certify calibration on any service visit by performing multi-point checks against NIST-traceable artifacts and issue certificates of calibration. Mitutoyo Field Services turns the potential logistical headache of crating and shipping critical measurement equipment for repair or calibration, and waiting for it to return, into a seamless, audit-ready on-site process. Service agreements are available at the time of equipment purchase. The Mitutoyo Canada Field Service team is also CLAS accredited to ISO/IEC 17025.res.

Parts Center

The Mitutoyo America Corporation parts center stocks more than 10,000 individual parts for Mitutoyo products. Same day and 24-hour shipping is available for most part requests. For CMM parts, a specialized group is available to provide additional CMM support services. A Mitutoyo product parts catalog is available via download from mitutoyo.com.

Training and Education

Training

Mitutoyo America Corporation delivers comprehensive training programs designed to help manufacturers maximize the performance of their measuring equipment and strengthen overall quality processes. Training spans Mitutoyo product and software platforms, including CMM, vision, and form measurement systems, along with hands-on courses in dimensional metrology, calibration, and repair. Led by experienced metrology experts, these programs combine practical application with foundational measurement science to drive immediate impact.

CT Lab and MRDA
(Mitutoyo Research and Development America)

Mitutoyo Research & Development America, Inc. (MRDA) advances the future of precision measurement by developing innovative technologies, software, and measurement solutions that power Mitutoyo products worldwide. Working at the forefront of research and engineering, MRDA designs new measurement methods, hardware prototypes, and production software for coordinate measuring machines, vision systems, linear gauges, calipers, micrometers, encoders, and high-precision sensor systems. From aerospace and automotive to medical and electronics manufacturing, MRDA innovations help manufacturers achieve greater accuracy, quality, and confidence in every measurement.

Education

Mitutoyo Institute of Metrology

Mitutoyo America Corporation provides comprehensive education services designed to help manufacturers improve measurement accuracy and drive stronger process control across their operations. Through a blend of in-person, virtual, and on-demand training, Mitutoyo delivers instruction in dimensional metrology fundamentals, GD&T, CMM programming and operation, vision systems, and advanced inspection techniques, combining theory with hands-on application for immediate impact. In parallel, these programs support workforce development by equipping students, technicians, engineers, and quality professionals with the skills needed to onboard quickly, advance their capabilities, and sustain long-term manufacturing performance.

Contract Inspection, Contract Part Programming and Custom Solutions

Contract Inspection

Mitutoyo America Contract Inspection services provide manufacturers with fast, reliable measurement support across four laboratories in Ohio, California, Illinois, and Florida. Utilizing advanced technologies including CMM, vision, surface, form, and roundness systems, Mitutoyo delivers precise, unbiased third-party verification of part dimensions, tolerances, and specifications. These services support supplier qualification, resolve disputes, and accelerate product development while reducing risk and ensuring accurate, dependable results that keep production and quality processes moving forward.

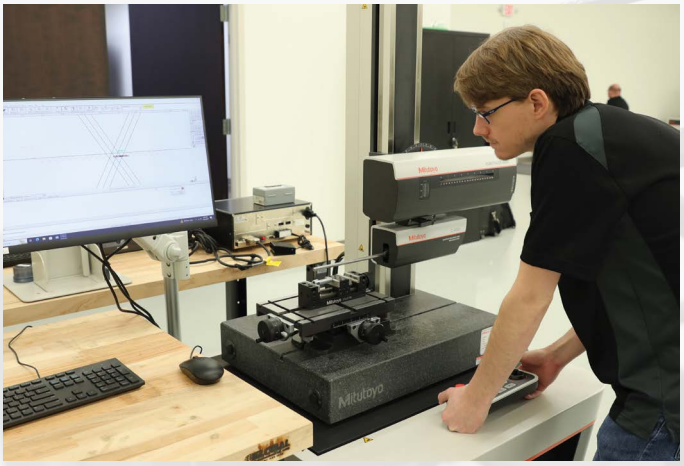

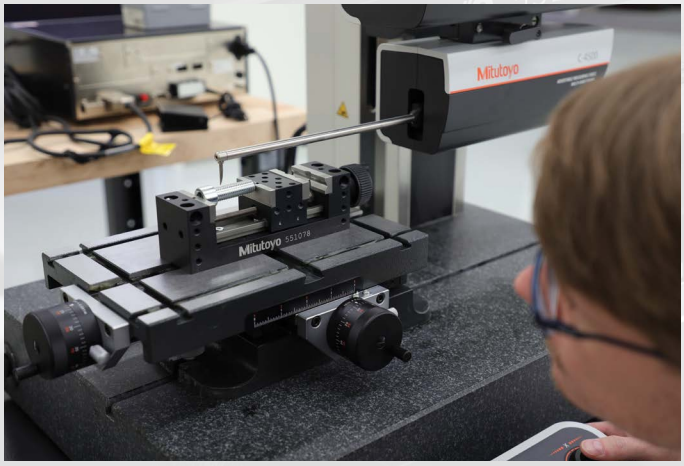

Contract Part Programming

Mitutoyo America Contract Part Programming services provide expert support to help manufacturers maximize measurement efficiency and precision. Delivered by a highly skilled team of programmers, these services range from minor program updates to full-scale development of custom measurement routines tailored to specific parts and applications. By optimizing CMM, vision, and other metrology equipment performance, Mitutoyo helps streamline inspection processes, reduce bottlenecks, and address internal resource gaps. Available through Metrology Service Centers nationwide, this service ensures scalable, high-quality programming support that enhances productivity and enables consistent, accurate results.

Custom Solutions

Mitutoyo America Corporation Custom Solutions help manufacturers integrate metrology into production environments for greater efficiency, accuracy, and process control. Leveraging an extensive portfolio of precision instruments alongside third-party technologies, Mitutoyo designs and delivers fully customized solutions, from fixture design and 3D CAD concepts to turnkey systems, inline and near-line gaging, and advanced software integrations. With capabilities including feasibility studies, custom styli and accessories, and green button automation, these solutions align measurement with manufacturing workflows, nabling faster decision-making, improved throughput, and scalable quality assurance.

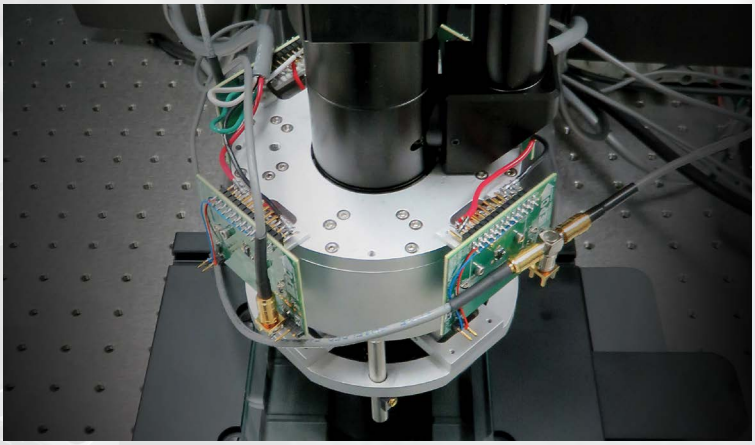

My.Mitutoyo

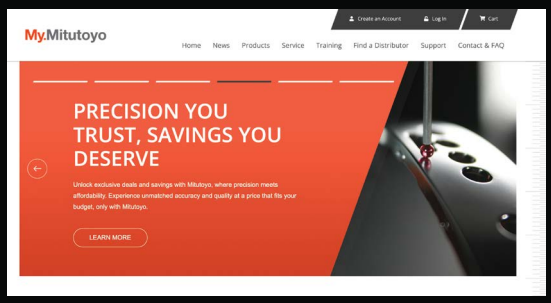

My.Mitutoyo.com is our personalized online customer portal, providing registered users with convenient access to product information, education, and customer resources in one centralized location. The portal is designed to help customers manage their Mitutoyo products, expand their metrology knowledge, and stay connected with the latest news, events, and resources. Additional tools and services are available to help customers get the most from their Mitutoyo investment.

Features include:

- Register and view your Mitutoyo products
- Purchase education courses and online training
- Browse product information
- Stay informed with product announcements, national events, and company news

Mitutoyo Global Network

"Glocal" Development Responsive to Regional Characteristics

Mitutoyo, from early on, has developed its businesses globally. In addition to having established a globally collaborative system, we are strengthening local management that responds flexibly to the unique characteristics of each region to always provide the optimal solutions for customers wherever they may be.

Headquarters

Small Tool Plant

Microcord Plant

Kiyohara Plant

Nakatsugawa Plant

Miyazaki Plant

Kure Plant

Shiwa Plant

Kochi Plant

Mitutoyo America Corporation

Mitutoyo Europe GmbH

Mitutoyo Asia Pacific Pte. Ltd.

Mitutoyo South Asia Pvt. Ltd.

Mitutoyo Sul Americana Ltda.

Mitutoyo Measuring Instruments (Shanghai) Co., Ltd.

Meaning of Symbols

ABSOLUTE Linear Encoder

ABSOLUTE™

ABSOLUTE is a trademark of Mitutoyo Corporation.

This is an electronic measuring scale that provides a direct readout of ABSOLUTE linear position when switched on, without needing to be zeroed or reset. Mitutoyo measuring instruments incorporating these scales provide the significant benefit of being always ready for measurement without the need of preliminary setting after switching on. There are three types of ABSOLUTE linear encoders depending on whether the method used is electrostatic, electromagnetic, or optical. They are widely used in various measuring instruments as measuring systems endowed with enhanced reliability of measured values.

Advantages:

1. No count error occurs even if you move the slider or spindle rapidly.
2. You do not have to reset the system to zero when turning on the system after turning it off*1.
3. As this type of encoder can drive with less power than the incremental encoder, the battery life is prolonged to about 5 years (continuous operation of 18,000 hours)*2 under normal use.

*1 Unless the battery is removed.
*2 In the case of ABSOLUTE Digimatic calipers and ABSOLUTE coolant proof calipers.

IP Codes

IP65

IP66

IP67

IP67 G

IP is a trademark of Mitutoyo Corporation. The numerals and letters indicate protection levels.

These are codes that indicate the degree of protection provided (by an enclosure) for the electrical function of a product against the ingress of foreign bodies, dust and water as defined in IEC standards (IEC 60529: 2013) and JIS C 0920: 2003. [IEC: International Electrotechnical Commission]

(IP: International Protection) IP □ □ □ (Supplementary letter)

First characteristic numeral	Degrees of protection against solid foreign objects	
	Brief description	Definition
0	Unprotected	—
1	Protected against solid foreign objects of Sø50 mm and greater	A Sø50 mm object probe shall not fully penetrate enclosure*
2	Protected against solid foreign objects of Sø12.5 mm and greater	A Sø12.5 mm object probe shall not fully penetrate enclosure*
3	Protected against solid foreign objects of Sø2.5 mm and greater	A Sø2.5 mm object probe shall not fully penetrate enclosure*
4	Protected against solid foreign objects of Sø1.0 mm and greater	A Sø1.0 mm object probe shall not fully penetrate enclosure*
5	Protected against dust	Ingress of dust is not totally prevented, but dust that does penetrate must not interfere with satisfactory operation of the apparatus or impair safety.
6	Dust-proof	No ingress of dust allowed.

* The full diameter of the object probe shall not pass through an opening of the enclosure.

For details of the test conditions used in evaluating each degree of protection, please refer to IEC 60529 (JIS C 0920).

Second characteristic numeral	Degrees of protection against water	
	Brief description	Definition
0	Unprotected	—
1	Protected against vertical water drops	Vertically falling water drops shall have no harmful effects.
2	Protected against vertical water drops within a tilt angle of 15°	Vertically falling water drops shall have no harmful effects when the enclosure is tilted at any angle up to 15° on either side of the vertical.
3	Protected against spraying water	Water sprayed at an angle up to 60° either side of the vertical shall have no harmful effects.
4	Protected against splashing water	Water splashed against the enclosure from any direction shall have no harmful effects.
5	Protected against water jets	Water projected in jets against the enclosure from any direction shall have no harmful effects.
6	Protected against powerful water jets	Water projected in powerful jets against the enclosure from any direction shall have no harmful effects.
7	Protection against water penetration	Ingress of water in quantities causing harmful effects shall not be possible when the enclosure is temporarily immersed in water under standardized conditions of pressure and time.
8	Protected against the effects of continuous immersion in water	Ingress of water in quantities causing harmful effects shall not be possible when the enclosure is continuously immersed in water under conditions which shall be agreed between manufacturer and user but which are more severe than for IPX7.

Supplementary letter	Degrees of protection against oil	
	Abstract	
F	Oil-resistant	Drops or splashes of oil from any direction cause no harmful effects.
G	Oil-proof	Protection against entry of oil droplets or splashes from all directions.

The protection levels against oil are specified only in the appendix of JIS C 0920.

Digimatic S1

DIGIMATIC S1

The proprietary Mitutoyo bidirectional serial communication protocol enables a connected PC to execute measurement data output, setting and control of a measuring instrument, and capture of information of a specific measuring instrument.

TÜV Rheinland certification marks

TÜVRheinland CERTIFIED
Dust and Water Protected IP 67
www.tuv.com ID 1111305262

All products with the marks shown on the left have passed the IP test carried out by the German accreditation organization, TÜV Rheinland.

Measuring Instruments Shipped with Inspection Certificate

Mitutoyo guarantees the product quality. PROPRIETARY INSPECTION CERTIFICATE

Mitutoyo guarantees product quality as a leading precision measuring instrument manufacturer and ships measuring instruments with an inspection certificate that includes inspection data so that customers can use them with confidence. Mitutoyo also calibrates the purchased measuring instruments and issues a calibration certificate, for a fee, that proves traceability to the relevant standard.
Note: For the meaning of the inspection marks shown at left, refer to the detailed description of each product.

MeasurLink® ENABLED marks

MeasurLink® ENABLED
Data Management Software by Mitutoyo

Products equipped with the measurement data output function can be connected to the measurement data network system MeasurLink®. MeasurLink® is a registered trademark of Mitutoyo Corporation in Japan and Mitutoyo America Corporation in the United States.

Installation of Main Unit Startup System

Main Unit Startup System

As a part of the enhancement of our export control system, the large CNC measuring machines (all the CNC Coordinate Measuring Machines, Vision Measuring Systems, and Form Measuring Machines) are now equipped with a Main Unit Startup System (relocation detecting system) before export.
This system is designed to take a machine out of operation upon detecting the mechanical shock that accompanies relocation. If you intend to relocate a measuring machine fitted with this system, please contact us beforehand so that our service engineers can assist you.
However, the system may be triggered in the event of a natural event such as a powerful earthquake. In this case, our service engineers will deal with the situation at the earliest opportunity.

Mitutoyo

Got Questions?

Mitutoyo

Calibration Laboratories Worldwide

Mitutoyo has built a network for comprehensive calibration support of precision measuring products in the global market. To provide calibration services on a global scale, Mitutoyo has gained ISO/IEC 17025 certification from the accreditation body in each country, and has issued calibration certificates carrying the mark of each accreditation body. In addition, the calibration certificates issued by each calibration laboratory are mutually recognized in the countries and commercial areas signed in the MRA (Mutual Recognition Arrangement) of ILAC (International Laboratory Accreditation Cooperation) and APAC (Asia Pacific Accreditation Cooperation), or the MLA (Multilateral Agreement) of EA (European co-operation for Accreditation).

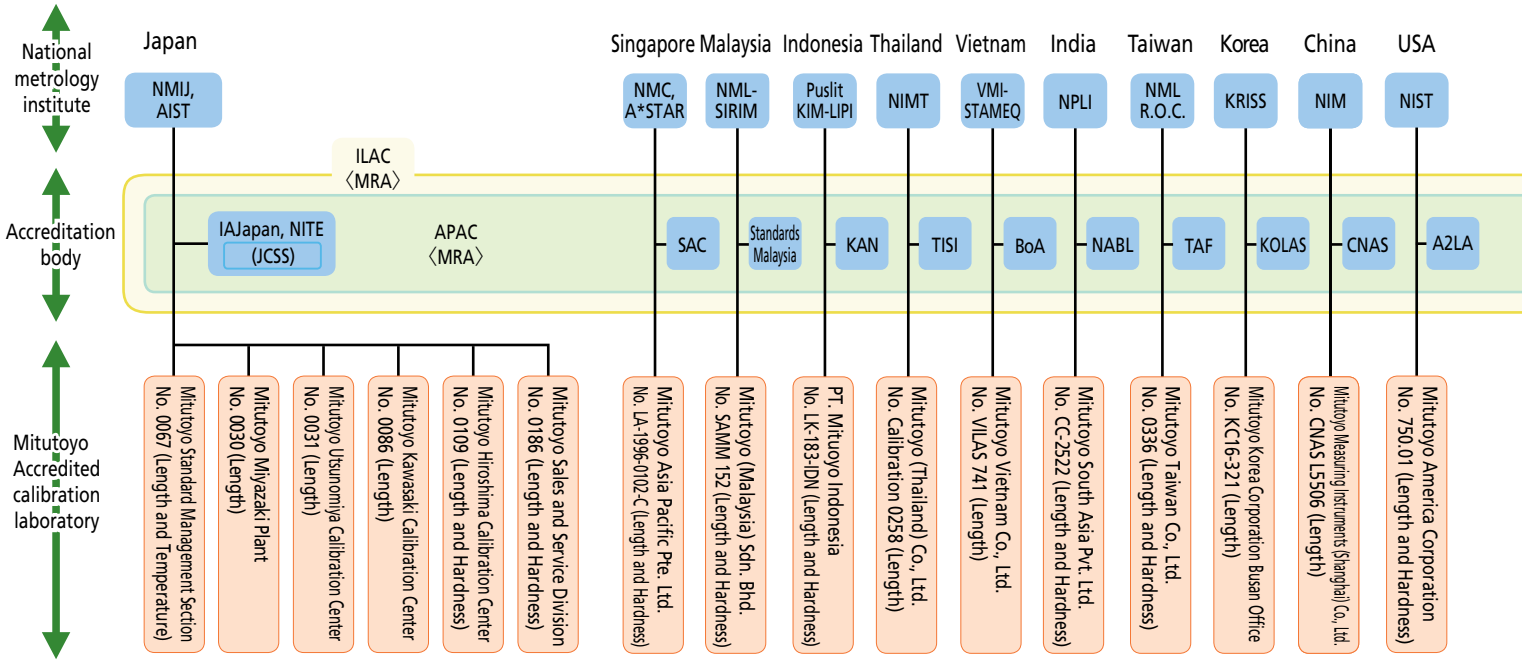

- Japan
  - AIST : National Institute of Advanced Industrial Science and Technology
  - NMIJ : National Metrology Institute of Japan
  - IAJapan : International Accreditation Japan
  - NITE : National Institute of Technology and Evaluation
  - JCSS : Japan Calibration Service System
- Singapore
  - NMC, A*STAR : National Metrology Centre/Agency for Science, Technology and Research
  - SAC : Singapore Accreditation Council
- Malaysia
  - NML-SIRIM : National Metrology Laboratory-Standards and Industrial Research Institute of Malaysia
  - Standards Malaysia : Standards Malaysia
- Indonesia
  - Puslit KIM-LIPI : Research Center for Calibration, Instrumentation and Metrology-Indonesian Institute of Science
  - KAN : Komite Akreditasi Nasional
- Thailand
  - NIMT : National Institute of Metrology (Thailand)
  - TISI : Thai Industrial Standard Institute
- Vietnam
  - VMI-STAMEQ : Vietnam Metrology Institute, Directorate for Standards and Quality
  - BoA : BUREAU OF ACCREDITATION
- India
  - NPLI : National Physical Laboratory of India
  - NABL : National Accreditation Board for Testing and Calibration Laboratories
- Taiwan
  - NML R.O.C. : National Measurement Laboratory R.O.C.
  - TAF : Taiwan Accreditation Foundation
- Korea
  - KRISS : Korea Research Institute of Standards and Science
  - KOLAS : Korea Laboratory Accreditation Scheme
- China
  - NIM : National Institute of Metrology
  - CNAS : China National Accreditation Service for Conformity Assesment
- U.S.A.
  - NIST : National Institute of Standards and Technology
  - A2LA : American Association for Laboratory Accreditation
- Canada
  - NRC : National Research Council Canada/Institute for National Measurement Standards
  - SCC : Calibration Laboratory Assessment Service/Standards Council of Canada
- Mexico
  - CENAM : Centro Nacional de Metrología
  - ema : Entidad Mexicana de Acreditación, a.c.
- Germany
  - PTB : Physikalisch-Technische Bundesanstalt
  - DAkkS : Deutsche Akkreditierungsstelle GmbH
- U.K.
  - NPL : National Physical Laboratory
  - UKAS : United Kingdom Accreditation Service
- France
  - LNE : Laboratorie national de metrologie et d'essaias
  - Cofrac : Comité français d'accréditation

Note: The above are domestic and international locations where Mitutoyo provides ISO/IEC 17025 accredited calibration services.
(As of July, 2024)

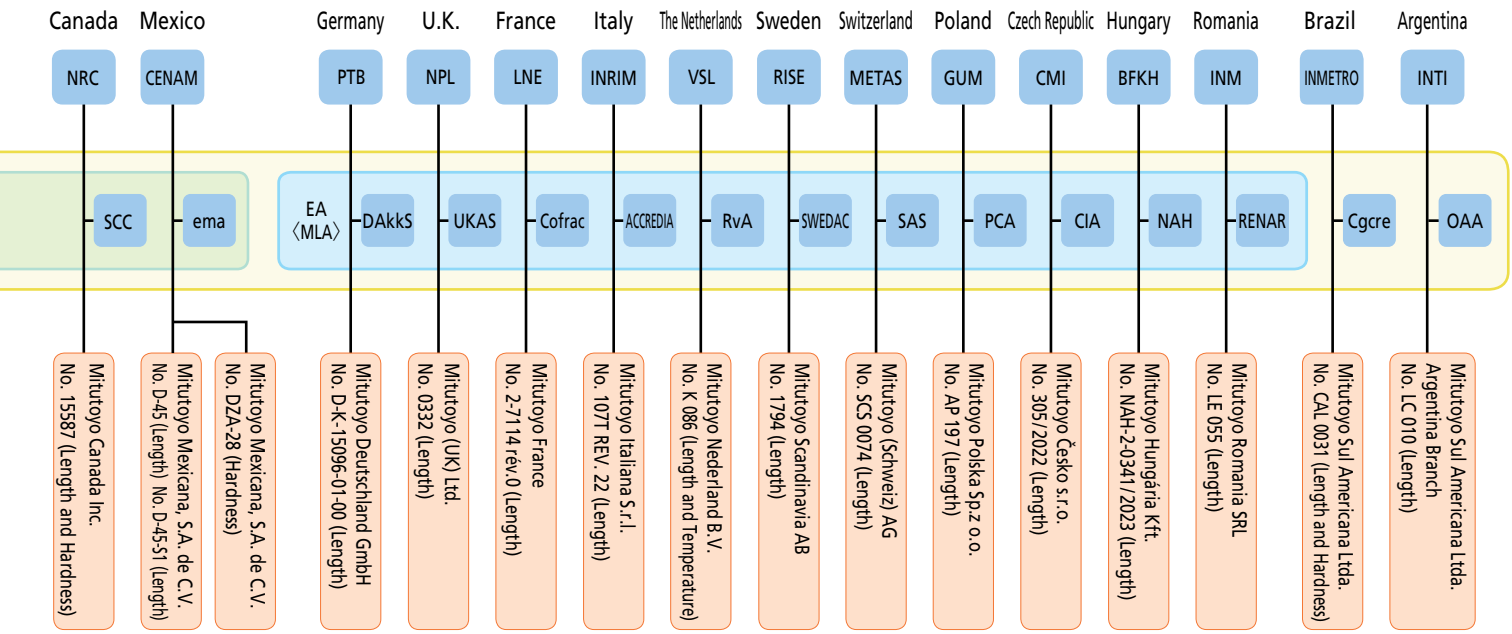

- Italy
  - INRIM : Istituto Nazionale di Ricerca Metrologica
  - ACCREDIA : L'ENTE ITALIANO DI ACCREDITAMENTO
- The Netherlands
  - VSL : Van Swinden Laboratorium
  - RvA : Raad voor Accreditatie
- Sweden
  - RISE : RISE Research Institutes of Sweden AB
  - SWEDAC : Swedish Board for Accreditation and Conformity Assessment
- Switzerland
  - METAS : The Federal Institute of Metrology
  - SAS : Swiss Accreditation Service
- Poland
  - GUM : Główny Urząd Miar - the National Metrology Institute in Poland
  - PCA : Polskie Centrum Akredytacji
- Czech Republic
  - CMI : Český Metrologický Institut
  - CIA : Český Institut pro Akreditaci
- Hungary
  - BFKH : Government Office of the Capital City Budapest
  - NAH : Nemzeti Akkreditáló Hatóság
- Romania
  - INM : Institutul National de Metrologie
  - RENAR : Asociaţia de Acreditare din România

ILAC : International Laboratory Accreditation Cooperation
APAC : Asia Pacific Accreditation Cooperation
MRA : Mutual Recognition Arrangement
EA : European co-operation for Accreditation
MLA : Multilateral Agreement

Name of each National metrology institutes and Accreditation bodies are based on our survey.
For the latest information, please refer to our website. **https://www.mitutoyo.co.jp**

- Brazil
  - INMETRO : Instituto Nacional de Metrologia Qualidade e Tecnologia
  - Cgcre : Coordenação Geral de Acreditação do INMETRO
- Argentina
  - INTI : Instituto Nacional de Tecnologia Industrial
  - OAA : Organismo Argentino de Acreditación

Certificate of DAkkS accredited laboratory (Mitutoyo Deutschland in Germany)

Cerificate of SAC accredited laboratory (Mitutoyo Asia Pacific in Singapore)

Certificate of A2LA accredited laboratory (Mitutoyo America in U.S.A.)

Certificate of RvA accredited laboratory (Mitutoyo Nederland in the Netherlands)

Certificate of CNAS accredited laboratory (Mitutoyo Measuring Instruments (Shanghai) in China)

Certificate of A2LA accredited laboratory (Mitutoyo Canada in Canada.)

Traceability of Mitutoyo Standards

Mitutoyo ensures and maintains traceability of various types of precision measuring instruments by holding standards of length and other physical quantities that are directly traceable to the national standards for use in calibrating the working standards used for the calibration of measuring instrument products supplied to industry. Furthermore, Mitutoyo offers a temperature calibration service which is indispensable for high-accuracy length measurement.

The Mitutoyo traceability system with the optical frequency comb at the top level, ensuring performance equivalent to that of the Japan's national standard, and the calibration technology supporting this system are the basis of highly accurate and reliable products offered to customers.

Certificate of Accreditation

Certificate of JCSS accredited laboratory (Mitutoyo Standard Management Section)

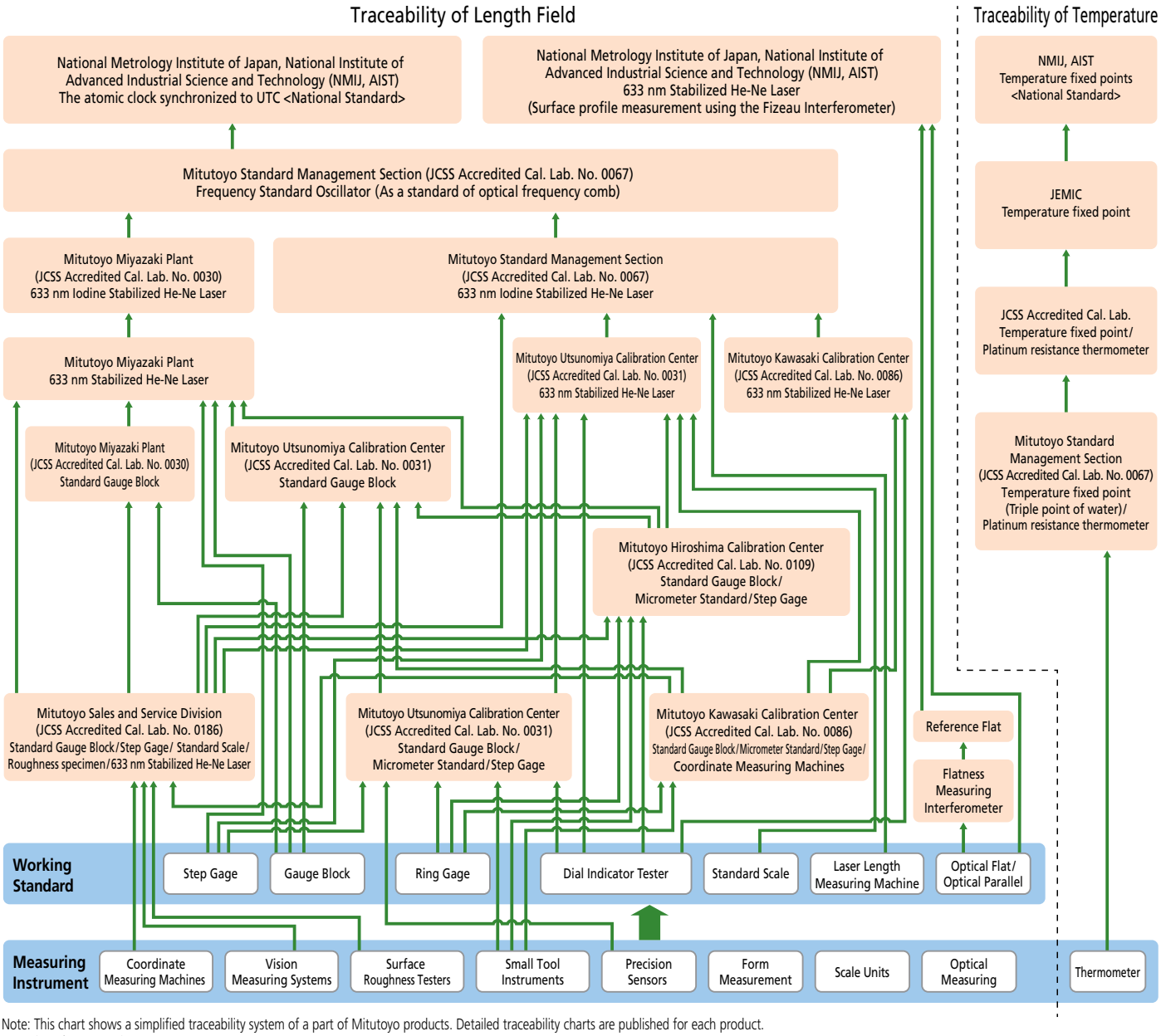

Note: This chart shows a simplified traceability system of a part of Mitutoyo products. Detailed traceability charts are published for each product.
(As of July, 2024)

For the latest information, please refer to our website. **https://www.mitutoyo.co.jp**

Traceability of Hardness Field

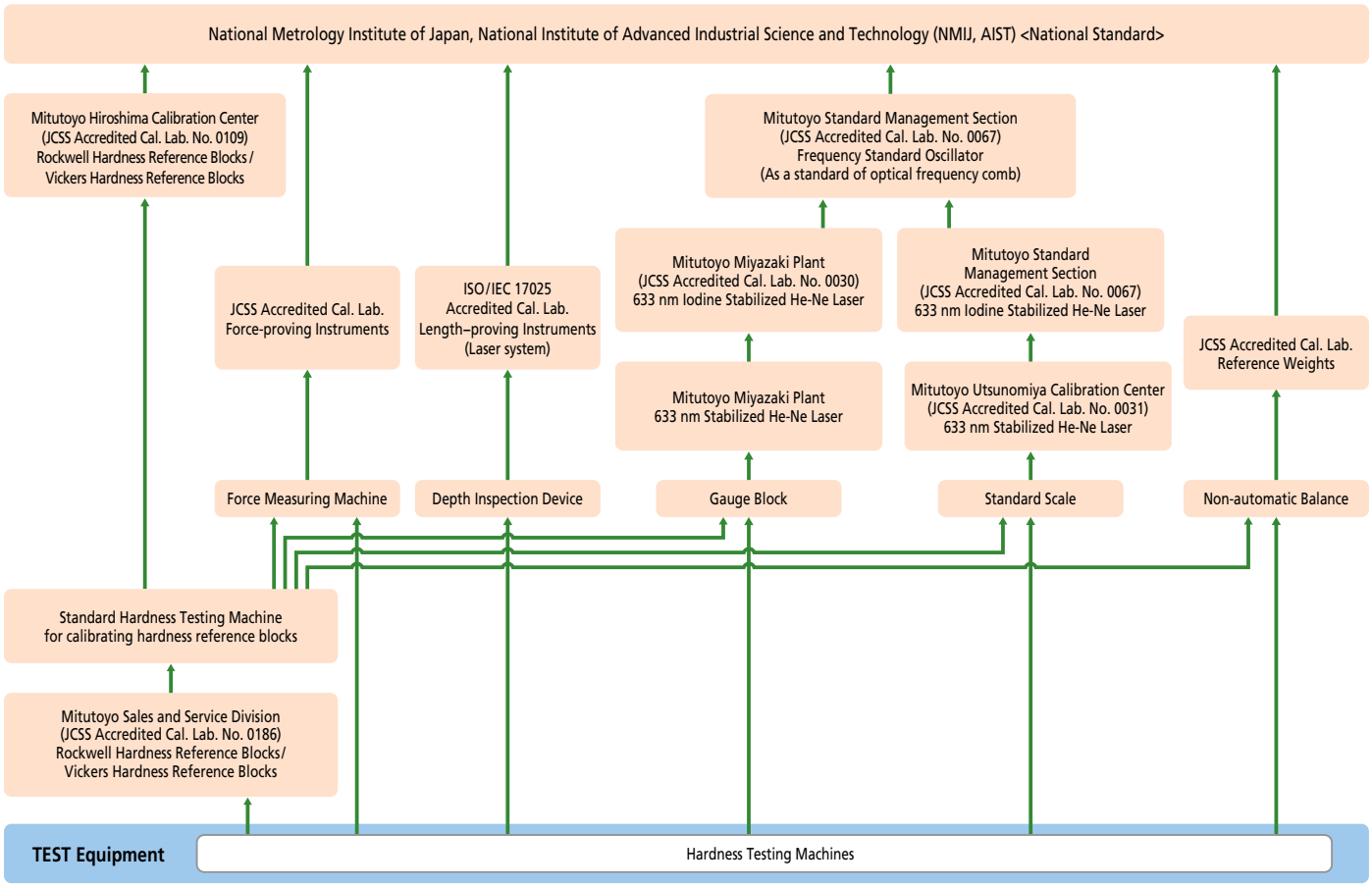

Note: This chart shows a simplified traceability system of a part of Mitutoyo products. Detailed traceability charts are published for each product.
(As of July, 2024)

For the latest information, please refer to our website. **https://www.mitutoyo.co.jp**

Video

Response to Safety and Environmental Protection Regulations

To deliver safe and reliable products to our customers, Mitutoyo evaluates its products to ensure that they adhere to applicable product safety and environmental standards, including CE marking.

CE Marking

CE marking indicates that a product complies with the essential requirements of the relevant European health, safety and environmental protection legislation.

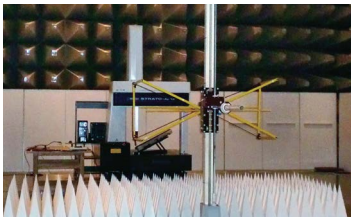

Conformity evaluation for CE marking (EMC Directives)

Major applicable Directives relating to Mitutoyo products

Applicable Directives	Applicable range
Machinery Directive	At least one part of a machine that may cause injury to the human body if it moves due to movement of an actuator such as a motor.
EMC Directive (Electromagnetic Compatibility Directive)	A product that may produce electromagnetic radiation or which is influenced by electromagnetic radiation from outside.
Low Voltage Directive	Equipment (device) that uses AC voltage of 50 to 1000 V or DC voltage of 75 to 1500 V.
Radio Equipment Directive	All electrical and electronic equipment that intentionally transmits and receives radio waves at frequencies below 3000 GHz.
RoHS Directive	Restriction of the use of certain hazardous substances in electrical and electronic equipment. Restricted substances and maximum concentration values tolerated by weight: · Lead (0.1%) · Cadmium (0.01%) · Mercury (0.1%) · Hexavalent chromium (0.1%) · Polybrominated biphenyls (PBB) (0.1%) · Polybrominated diphenyl ethers (PBDE) (0.1%) · Bis (2-ethylhexyl) phthalate (DEHP) (0.1%) · Butyl benzyl phthalate (BBP) (0.1%) · Dibutyl phthalate (DBP) (0.1%) · Diisobutyl phthalate (DIBP) (0.1%) Note: Our products fall under Cat.9 "Monitoring and control instruments including industrial monitoring and control instruments".

UKCA Marking

UKCA marking indicates that the products conform to the applicable requirements for products sold in Great Britain.

Response to WEEE Directive

The WEEE Directive*1 is a directive that mandates appropriate collection and recycling of electrical and electronic equipment waste.
The purpose of this directive is to increase the reuse and recycling of these products. To differentiate between equipment waste and household waste, a crossed-out wheeled-bin symbol is marked on a product.

*1 WEEE Directive: Directive 2012/19/EU of the European Parliament and of the Council on waste electrical and electronic equipment.

Response to REACH Regulation

REACH Regulation*2 is a regulation governing registration, evaluation, authorization and restriction of chemical substances in Europe, and all products such as substances, mixtures and molded products (including accessories and packaging materials) are regulated.
Chemical substances scientifically proven to be substances that are hazardous to human health and the global environment (Candidate List of substances of very high concern for Authorisation (CLS)) are prohibited to be sold or information concerning them disclosed is mandated in Europe.
We will actively disclose information about our products and provide replacement if we find our products contain any of the listed substances.

*2 REACH Regulation: Regulation (EC) No1907/2006 of the European Parliament and of the Council concerning the Registration, Evaluation, Authorization and Restriction of Chemicals

Response to Management Methods for Restricted Use of Hazardous Substances in Electrical and Electronic Product (China RoHS 2)

We set the environmental protection use period regulated by China RoHS 2 per product and label with the marks shown on the right, together with a list of the contained substances.

"Environmental Protection Use Period" mark*3

*3 The environmental protection use period does not indicate the product warranty period.

Precautions to be taken when handling button cells

WARNING Indicates a hazard with a medium level of risk which, if not avoided, could result in death or serious injury.

- KEEP batteries OUT OF REACH OF CHILDREN, ingestion can cause DEATH or serious injury.
  Seek immediate medical attention if you suspect that a battery is swallowed or inserted inside any part of the body.
- Do not dismantle, heat or throw the battery in a fire.
- If alkaline solution leaks from the battery and contacts your skin or clothes, immediately wash the affected area with water. IF IN EYES, immediately rinse eyes cautiously with water for several minutes. Remove contact lenses, if present and easy to do. Continue rinsing and summon immediate assistance from a doctor.
- Do not solder directly to a battery.
- Ensure batteries are inserted without coming into contact with metal parts of equipment.
- In case of disposal, insulate (+) and (-) terminals of a battery by applying an insulating material.

CAUTION Indicates a hazard with a low level of risk which, if not avoided, could result in minor or moderate injury.

- Do not try to charge the battery as it is not chargeable. Install the battery with correct polarity. Failure to do so can cause battery leakage or burst resulting in damage to the instrument or personal injury.

NOTICE Indicates a potentially hazardous situation which, if not avoided, may result in property damage.

- Do not use new and used batteries together. Do not use different types of batteries together.
- Do not use nor leave batteries in direct sunlight nor in locations subject to high temperature or humidity.
- Avoid letting batteries contact water.
- Remove batteries from equipment that will not be used for a prolonged period.

Follow the regulations of each country when disposing of batteries.

Got Questions?

Traceability Mitutoyo North America

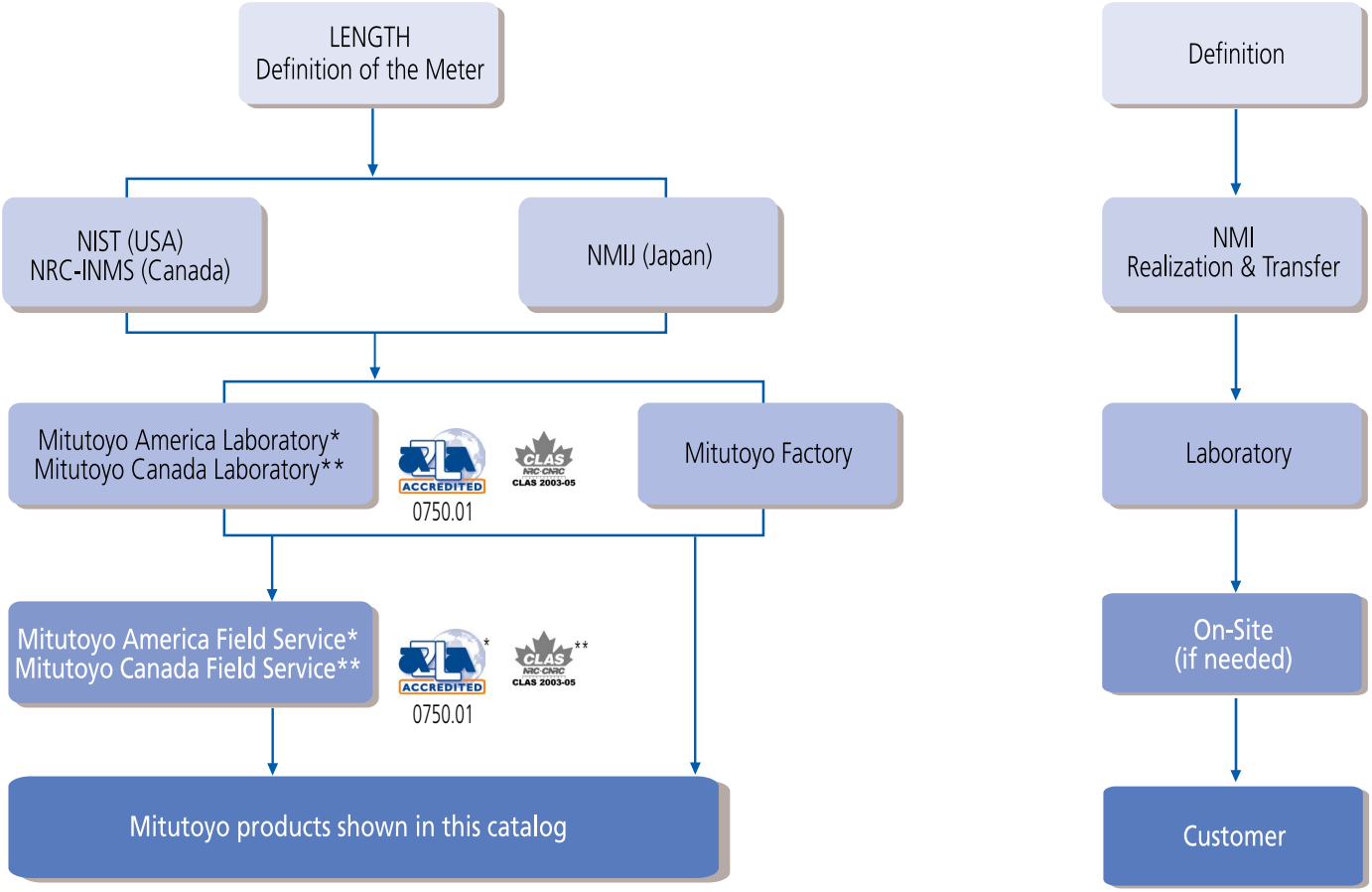

Traceability is an essential requirement for all measurements. At Mitutoyo, we consider providing traceability to our customers to be a critical part of our business. Traceability is often referred to as a "chain of comparisons," and that chain always starts with a precise definition. For length measurements, the meter is defined by how far light moves in a vacuum in a defined amount of time. The job of reducing that definition into a practical measurement belongs to the world's National Metrology Institutes (NMI). The NMI in the United States is the National Institute of Standards and Technology (NIST), where they realize and transfer the definition of length to physical measurements of gage blocks, line scales, and other primary standards. From there, traceable measurements at other laboratories and factories are possible. Mitutoyo factories and calibration labs regularly send their standards to NIST; however, traceability can also be established through other recognized NMIs, such as the National Metrology Institute of Japan (NMIJ). The world's leading NMIs, such as NIST and NMIJ, routinely participate in intercomparisons to ensure global traceability to the same unit of length.

The requirements for demonstrating traceability vary from industry to industry. In the past, some industries required NIST test numbers, but that practice is now obsolete and has been replaced in many industries by the much more demanding requirement of ISO 17025 accreditation. To meet these needs, Mitutoyo America offers our customers A2LA-accredited calibrations either in our labs (Certificate 0750.01), or at your facility (Certificate 0750.01). None of our competitors can match the range and accuracy of accredited calibration services offered by Mitutoyo. Not every quality system requires accreditation, and for the less demanding needs, our standard factory issued certificates can still be used to ensure the required traceability.

Whatever the measurement, whatever the requirements for traceability, Mitutoyo has the most technically advanced metrology products and calibration services to meet your specific needs.

Warranties

Mitutoyo America Corporation ("Mitutoyo") warrants all of its products sold and shipped in the United States and Canada for one year from the date of installation at the original purchaser facility. The description as shown below is not a warranty by itself and is for general information only. For warranty terms and conditions as they pertain to a specific product, contact the Mitutoyo service center.

Mitutoyo warrants the products and software it manufactures and sells directly or through an authorized distributor, if the product or software is in the possession of the original purchaser. Except for software, Mitutoyo will, at its option, repair or replace any part or parts, which upon examination, are found to be defective in workmanship or material, provided the product is returned to Mitutoyo and the purchaser can prove that the product has been used and maintained and, where applicable, installed in accordance with Mitutoyo instructions and has not been subject to abuse. For software, Mitutoyo will replace defective media or make a warranted program operate or replace the program with a functionally equivalent program as warranted, provided there is satisfactory documentation that the software has been installed, used and maintained in accordance with Mitutoyo instructions in the User Manual and provided further that the customer can satisfactorily show that a defect exists.

Mitutoyo does not accept liability or responsibility for repairs, additions, or modifications made to the product, including those made by others, without Mitutoyo's written consent.

The warranties Mitutoyo provides do not adversely affect Mitutoyo's right to modify or change the design of products, without notice, including any of its specifications or materials.

Export Compliance

All products in this catalog are subject to the Foreign Exchange and Foreign Trade Control laws of Japan, US Export Administration Regulations (EAR) or the Canadian Export and Import Permits Act. Re-export or relocation of any of these products may require prior approval by an appropriate governing authority. If a purchased product is exported or re-exported, even if it is not considered a regulated item by a governing authority, Mitutoyo would like to be made aware, as the customer service available for that product may be affected. If you have any questions, please consult your local Mitutoyo sales office.

Safety Caution

Carefully read the specifications and functions in this catalog before selecting products. Safety may be compromised if you use products for purposes other than those stated here. Feel free to contact your nearest Mitutoyo sales center if you wish to use a product for other purposes or in a special environment.

Appearance and Specifications

Appearance and specifications are subject to change without prior notice for product improvement.
The product names in this catalog are registered trademarks or trademarks of Mitutoyo or their respective companies.

Conformance to Specification

The simple acceptance decision rule, as defined in ASME B89.7.3.1-2001, ISO/IEC Guide 98-4:2012, and ISO/TR 14253-6:2012, applies when determining measuring equipment conformance to specified accuracy values in this catalog. In applying the simple acceptance decision rule, the measurement capability index, as defined in ISO/IEC Guide 98-4:2012 and ISO/TR 14253-6:2012, shall be equal to or greater than one and is recommended to be equal to or greater than four whenever practicable. Mitutoyo America Corporation recommends the use of ISO/IEC 17025 accredited calibration laboratories and that measurement uncertainty be evaluated in accordance with ISO/IEC Guide 98-3:2008 and ISO 14253-5:2015.

Measuring Instruments that Include a Certificate of Inspection

As part of quality assurance, Mitutoyo will attach data at the time of factory shipment*1 to the products listed on the following page.*2
Also, if calibration of the measuring instrument is requested at the time of purchase, we will issue, at a separate charge, an inspection certificate that proves traceability with the reference gage. If you wish to request calibration, please contact your local Mitutoyo sales office.

*1 For some products whose purchase date cannot be identified, the inspection data at the time of factory shipment cannot be used in the inspection certificate. For details, please contact your local Mitutoyo sales office.
*2 The products are listed in the series name. There are some models that will not be accompanied with an inspection certificate.

Mitutoyo guarantees the product quality.
PROPRIETARY INSPECTION CERTIFICATE
Mitutoyo guarantees the product quality.

- For the details of the inspection items to be included in the inspection certificate, please contact your local Mitutoyo sales office.
- If you have a request on inspection items, contact your local Mitutoyo sales office.

QuantuMike
293-140-30

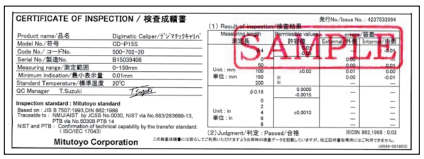

IP67 ABSOLUTE Coolant Proof Caliper
500-702-20

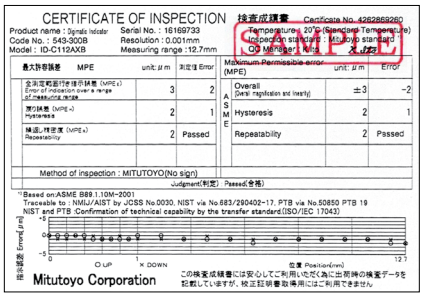

ABSOLUTE Digimatic Indicator ID-C (Peak-Value Hold Type)
543-300-10 / 543-300B-10

Ratchet Thimble Micrometer
102-701

Products Name		Page
Micrometers (only for models with the range of 0 – 1″ and 1 – 2″)	Ultra-high Accuracy Digimatic Micrometer	B-3
	High-speed and High-accuracy Digimatic Micrometer QuantuMike	B-5
	Coolant Proof Micrometers	B-7
	Digimatic Outside Micrometers	B-9
	Outside Micrometers	B-16
	Ratchet Thimble Micrometer	B-17
	Outside Micrometers	B-18
Inside Measuring Instruments	Digimatic Holtest	C-3
	Holtest	C-7
	Holtest (Type II)	C-11
	ABSOLUTE Borematic	C-13
	CERA Inside Micro Checker	C-30
Calipers	IP67 ABSOLUTE Coolant Proof Caliper	D-3
	ABSOLUTE Digimatic Caliper	D-5
	Dial Caliper	D-8
High Precision Height Measuring Tools	Linear Height	D-51
	QM-Height	D-53
Caliper/Height Gage Checker	CERA Caliper Checker	D-64
Depth Gages	Depth Micro Checker	D-70
Gage Blocks	Inch/Metric Rectangular Gage Block Sets	E-6 to E-8
	Micrometer Inspection Gage Block Sets	E-9
	Individual Inch/Metric Rectangular Gage Blocks	E-10 to E-12
	Gage Blocks with a Calibrated Coefficient of Thermal Expansion	E-13
	ZERO CERA Blocks (Ultra-low Thermal Expansion)	E-13
	Inch/Metric Square Gage Block Sets	E-17 to E-18
	Individual Inch/Metric Square Gage Blocks	E-19 to E-20
	Step Master	E-24
	Gage Block Comparator GBCD-250	E-25
	Gage Block Comparator GBCD-100A	E-25
Height Masters, Check Masters	Height Master	E-26
	Digital Height Master	E-27
	Universal Height Master	E-28
	Riser Blocks	E-29
	Check Master	E-30

Products Name		Page
Reference Gages	Standard Scales	E-32
	Working Standard Scales	E-32
	High Precision Square	E-33
	Black Granite Surface Plates	E-47
Digimatic Indicators	High-performance ABS Digimatic Indicator ID-FNX	F-3
	ABSOLUTE Digimatic Indicator ID-CNX	F-5
	ABSOLUTE Digimatic Indicator ID-N/B	F-7
	ABSOLUTE Digimatic Indicator ID-SX2	F-9
	ABSOLUTE Digimatic Indicator ID-U	F-11
	ABSOLUTE Digimatic Indicator ID-CAX (Peak-Value Hold Type)	F-13
	ABSOLUTE Digimatic Indicator ID-CGX (Bore Gage Type)	F-15
	ABSOLUTE Digimatic Indicator ID-CRX (Calculation Type)	F-17
	ABSOLUTE Digimatic Indicator ID-CJX (Signal Output Function Type)	F-20
	Digimatic Indicator ID-H	F-22
Dial Indicators	Dial Indicators	F-26
Dial Test Indicators	Dial Test Indicators	F-75
Indicator Calibration	i-Checker	F-87
	UDT-2 Calibration Tester	F-88
Linear Gages	High-accuracy/resolution Linear Gage LGH	G-9
Linear Scales	Linear Scales AT Series	H-13
	Linear Scales ST Series	H-19
Form Measuring Systems	SURFTEST	J-3
	CONTRACER	J-8
	FORMTRACER	J-9
	ROUNDTEST	J-21
	ROUNDTRACER	J-25
Hardness Testing Machines	Micro Vickers Hardness Testing Machine	K-4
	Vickers Hardness Testing Machine	K-6
	Rockwell Hardness Testing Machine	K-9
Hardness Testing Machines	Rebound Type Portable Hardness Tester (HH-V400)	K-14
Vision Measuring Systems	Quick Vision	M-3
	Micro-form Measuring System UMAP	M-9
	QUICK IMAGE	M-14
	QUICK SCOPE	M-15

Note: Some products mentioned above will not be accompanied with an inspection certificate as standard.

Featured Products

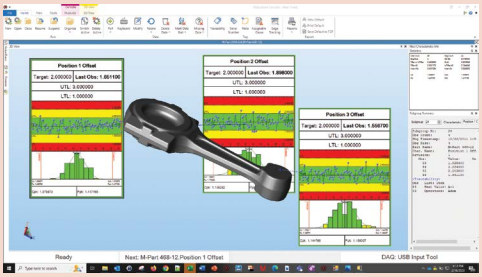

SPC Data Management Software

MeasurLink®

Refer to pages A-3 to A-10 for details.

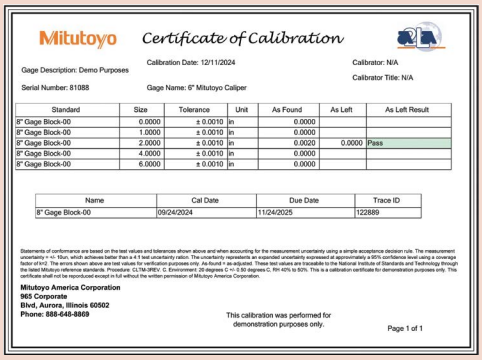

Mitutoyo *Certificate of Calibration*

Gage Description: Demo Purposes
Serial Number: 81088
Calibration Date: 12/11/2024
Gage Name: 6" Mitutoyo Caliper
Calibrator: N/A
Calibrator Title: N/A

Standard	Size	Tolerance	Unit	As Found	As Left	As Left Result
8" Gage Block-00	0.0000	± 0.0010	in	0.0000		
8" Gage Block-00	1.0000	± 0.0010	in	0.0000		
8" Gage Block-00	2.0000	± 0.0010	in	0.0020	0.0000	Pass
8" Gage Block-00	4.0000	± 0.0010	in	0.0000		
8" Gage Block-00	6.0000	± 0.0010	in	0.0000		

Name	Cal Date	Due Date	Trace ID
8" Gage Block-00	09/24/2024	11/24/2025	122889

Statements of conformance are based on the test values and tolerances shown above and when accounting for the measurement uncertainty using a simple acceptance decision rule. The measurement uncertainty = +/- 10un, which achieves better than a 4:1 test uncertainty ratio. The uncertainty represents an expanded uncertainty expressed at approximately a 95% confidence level using a coverage factor of k=2. The errors shown above are test values for verification purposes only. As found = as adjusted. These test values are traceable to the National Institute of Standards and Technology through the listed Mitutoyo reference standards. Procedure: CLTM-3PEV. C. Environment: 20 degrees C +/- 0.50 degrees C, RH 40% to 50%. This is a calibration certificate for demonstration purposes only. This certificate shall not be reproduced except in full without the written permission of Mitutoyo America Corporation.

Mitutoyo America Corporation
965 Corporate
Blvd, Aurora, Illinois 60502
Phone: 888-648-8869

This calibration was performed for demonstration purposes only.

Page 1 of 1

Gage Calibration and Tracking Software

MeasurLink® Gage Management

Refer to page A-9 for details.

Wireless Data Collection Systems

U-WAVE

Refer to pages A-15 to A-22 for details.

USB Data Cables and Interfaces

Input Tools, Multiplexers, and Data Logger/Printer

Refer to pages A-23 and A-27 for details.

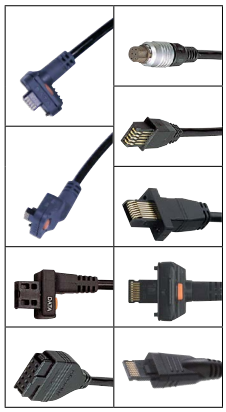

Cable Connection Guide

Connection Cables and Applicable Gage Models

Refer to pages A-29 to A-30 for details.

INDEX

Measurement Data Management

MeasurLink®	A-3-10
USB-ITPAK	A-11-14
U-WAVE Wireless	A-15-20
U-WAVE Bluetooth	A-21,22
Input Tools	A-23,24
Multiplexer - MIG-1,2,4,8USB	A-25
DP-1VA	A-26
Gage Selector 3	A-27
EC Counter	A-27
SPC Connecting Cables	A-28-30

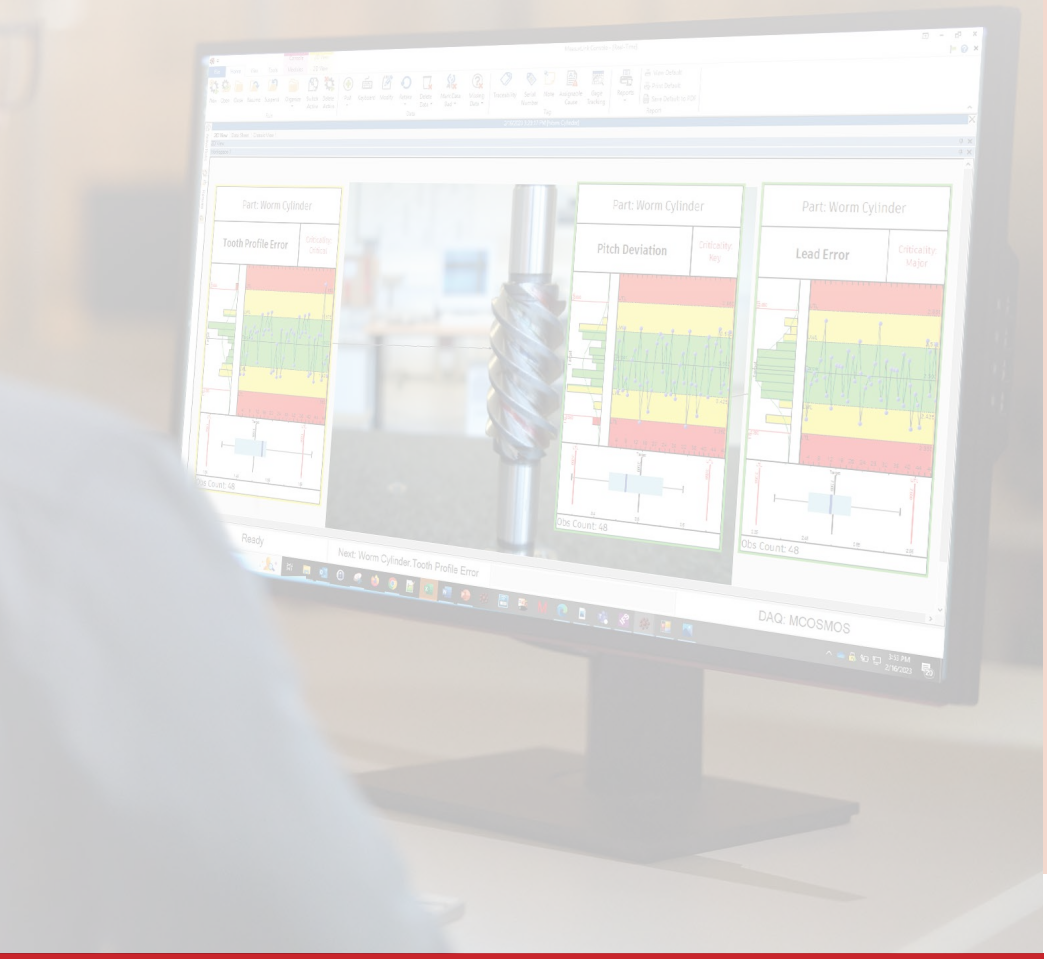

Mitutoyo

MeasurLink®

An Integrated Solution for Quality Data Management

A

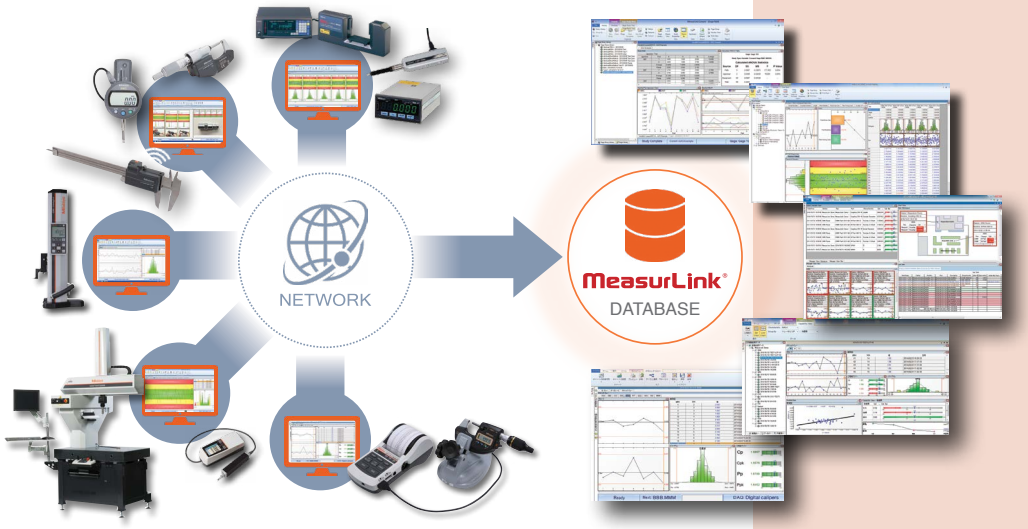

ML11

THE BIG PICTURE

Scalable Data Acquisition, Management & Analysis

MeasurLink® is the dedicated Mitutoyo Data Collection and Real-Time SPC software used in all industries to collect and analyze data to improve manufacturing processes.

Assemble a software package from any of the MeasurLink® modules to satisfy your organization's specific needs, or select the Single Floating License to share and use all modules in the MeasurLink® suite.

- **Real-Time Professional** is the data collection module for the MeasurLink suite. Collect data from nearly any measuring tool or metrology equipment. Display real time alerts, control charts, histograms, process capability indices, and more. Support for PC-based metrology equipment, such as CMMs, are through ASCII file import templates or DDE.
- **Real-Time Professional 3D** additionally supports view of the workpiece using 3D CAD data (HOOPS).
- **Process Analyzer** is a powerful supervisory tool for viewing, analyzing and reporting on all data collected at any Real-Time station on the network. Additional charting options and management-friendly reports provide insight on the manufacturing process.
- **Process Manager** enables centralized monitoring of information from all MeasurLink® data collection terminals networked together on the shop floor.
- **Report Scheduler** automatically outputs reports created by Real-Time or Process Analyzer on a user defined schedule.
- **Gage Management** plans and implements a complete calibration schedule and incorporates a powerful retrieval function in addition to recording and managing the operational state of gages.
- **Gage R&R** is an evaluation and analysis software compliant with MSA required in ISO/TS 16949.

MeasurLink® can serve the smallest shop to the largest multi-national enterprise with the most ease of use and power available in SPC/data management software today.

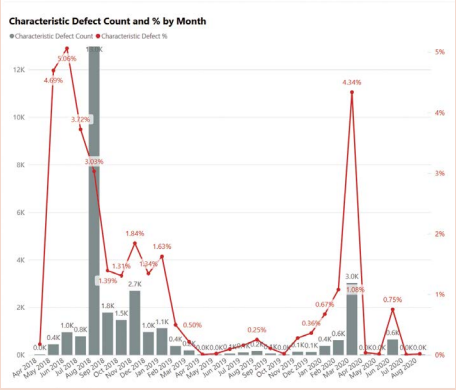

MeasurLink® supports PowerBI.
See page A-7 for details.

Refer to Bulletin No. (**2188**) for more details.

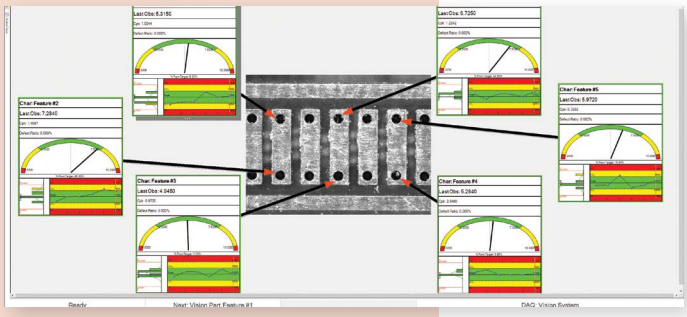

CONTINUOUS IMPROVEMENT WITH

Statistical Process Control

MeasurLink® calculates and monitors statistical metrics, and it is an integral part of Six Sigma activities. This Real-Time monitoring allows users to control the quality of the product during production and prevent costly defects:

- Live statistical data testing
- Email alerts and alarms for out-of-control processes
- Real time Cp, Cpk, Pp and Ppk calculations
- Immediate pre-control, X-Bar R and IMR charting
- Assignable cause and corrective action data entry

MeasurLink® allows companies to control the quality of their processes by identifying and reducing process variation.

CONFORMANCE TO

AS9102 Requirements

AS9100 requires a great focus on establishing and complying with design requirements. MeasurLink® supports First Article Inspection view in Real-Time or Process Analyzer to provide a clear and concise approach for completing FAI reports that align with the AS9102 requirements. This feature includes forms 1, 2, and 3 with options to export to Excel or PDF and allows users to search First Article Inspection information and production data in one location.

First Article Inspection View - 96

	A	B	C	D	E	F	G
1	1. Part Number:		2. Part Name:		3. Serial Number:	4. FAIR Number:	
2	27543-01		M-Part 468-12		SN4096	213A	
3	5. Part Revision Level:		6. Drawing Number:		7. Drawing Revision Level:	8. Additional Changes:	
4	1		576324		B	N/A	
5	9. Manufacturing Process Reference:		10. Organization Name:		11. Supplier Code:	12. Purchase Order Number:	
6	19523		Mitutoyo America Corporation		546-21	60813	
7	13. Detail Part:	X	14.Full FAI:	X	Partial FAI:		
8	Assembly FAI:		Baseline Part Number (including revision level):		N/A		
9			Reason for Partial FAI:		N/A		
10	a) If above part number is a detail part only, go to field 20						
11	b) If above part number is an assembly, go to the "INDEX" section below.						
12	INDEX of part numbers or sub-assembly numbers required to make the assembly noted above.						
13	15. Part Number:		16. Part Name:		17. Part Serial Number:	18. FAIR Number:	
14	27434-12		Coupling 256-14		137-023	209A	
15							
16	19. Signature:		John Doe			20. Date:	09/08/2022
17		X	FAI Complete		FAI Not Complete		
18	21. Reviewed By:		John Doe			22. Date:	09/12/2022
19	23. Customer Approval:		John Doe			24. Date:	09/14/2022

INTUITIVE DATA COLLECTION WITH

OCR Auto-Ballooning

Scan 2D prints of an image or PDF to automatically create new parts. Optical Character Recognition (OCR) automates the process of ballooning drawings and populating characteristic tolerances, making the process more accurate and efficient than ever before.

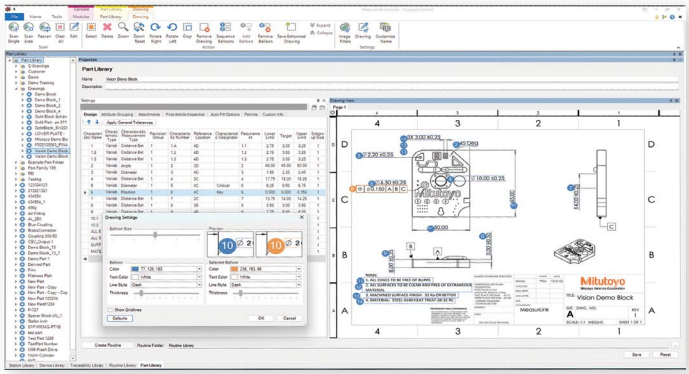

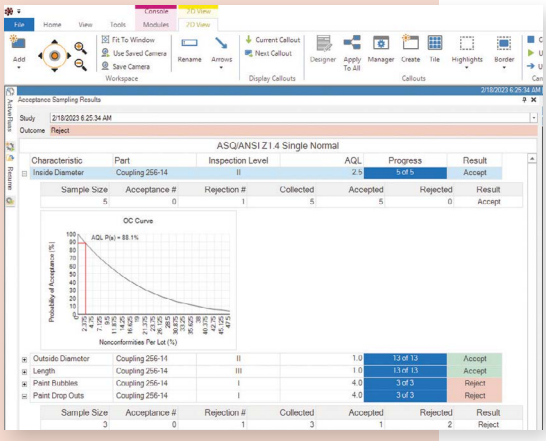

THE ADVANTAGES OF

Acceptance Sampling

MeasurLink®'s Acceptance Sampling uses C=0 or Z1.4 guidelines to determine inspection quantities. The inspection results will determine whether to accept or reject the entire material lot. Simply enter the lot size and sampling criteria to get started. This approach allows:

- Reduced cost of receiving inspection
- Increased confidence in supplier quality
- Faster reaction to supplier quality issues
- Less risk of supplier defects impacting other processes

MeasurLink®

An Integrated Solution for Quality Data Management

A

Real-Time

Data Collection Software for Operators and Inspectors

Use MeasurLink® Real-Time Standard Edition to acquire and analyze data in real-time and check variable and attribute inspection to control your process and minimize defects.

Designed to collect data at the point of manufacture, operators can be alerted of trends, cycles, and nonconformance as soon as they occur. A customizable user interface allows the user nearly infinite ways to view information specific to that process. MeasurLink® Real-Time has the ability to connect and acquire data from virtually any measuring device.

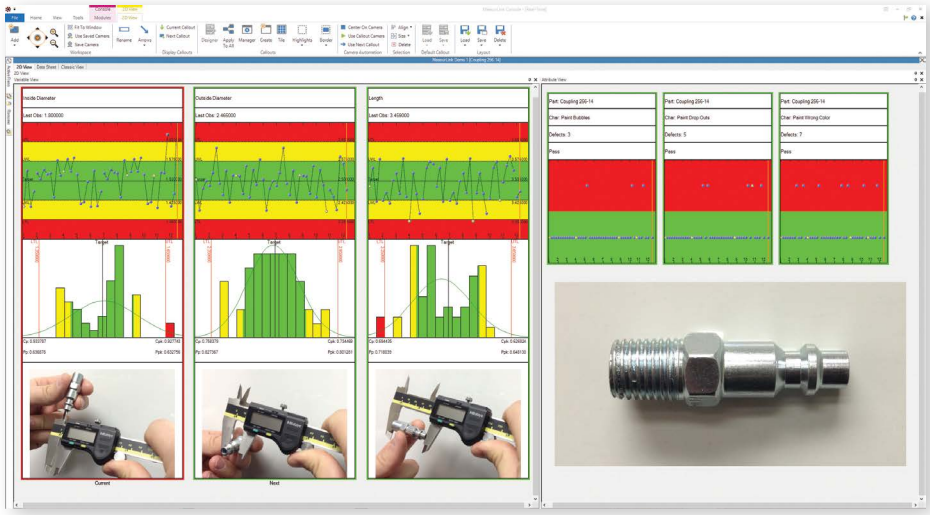

Views can be configured in many ways. Add images, prints, or videos to guide operators through inspection, or simply display a spreadsheet.

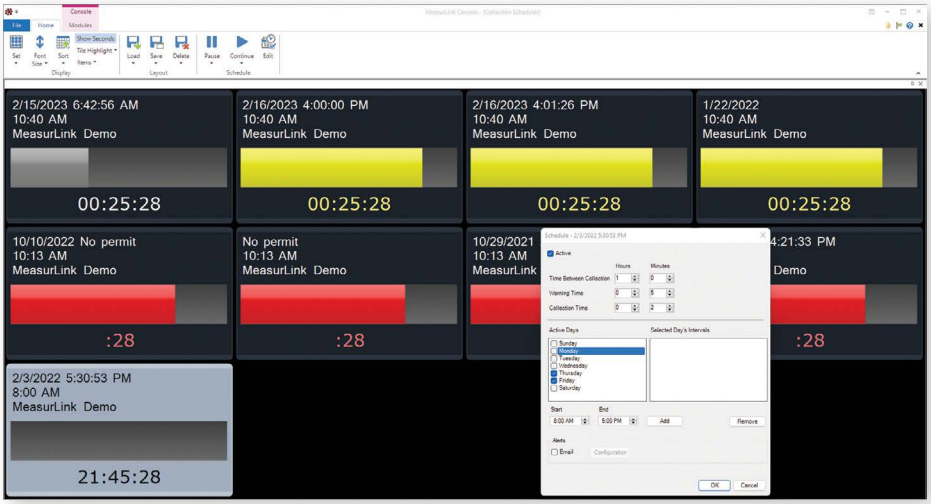

Schedule measurements by time so operators can see what is due for inspection in the easy-to-see Collection Scheduler dashboard.

Professional 3D

Includes all features of Real-Time Professional, including support for viewing 3D models during data collection.

Order No.	Description
MLV11LM	MeasurLink® V11, One Licesned Module
MLV11FL	MeasurLink® V11, One Floating License, All Modules
MLV113D	MeasurLink® V11, 3D Add-on for One Station - Requires a MeasurLink® V11 License

The single floating license is all-inclusive, it includes every module which can be used on any computer on the company network. Perfect for power users or anyone who wants to get the most improvement out of their manufacturing process. (Real-Time Professional 3D Edition is not included).

Got Questions?

Pattern Detection

Many patterns can be detected and alerted including:

- Cycles
- Trends
- Freaks
- Mixtures
- Grouping or "bunching" of measurements
- Gradual change in level
- Sudden shift in level
- Instability (abnormally large fluctuations)
- Stratification (abnormally small fluctuations)
- Interactions (two or more variables acting together)
- Systematic variation
- Tendency of one chart to follow another
- Attribute data tests

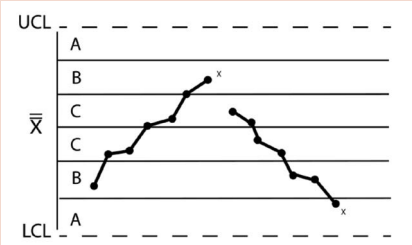

MeasurLink® Real-Time can connect and acquire data from nearly any measuring device.

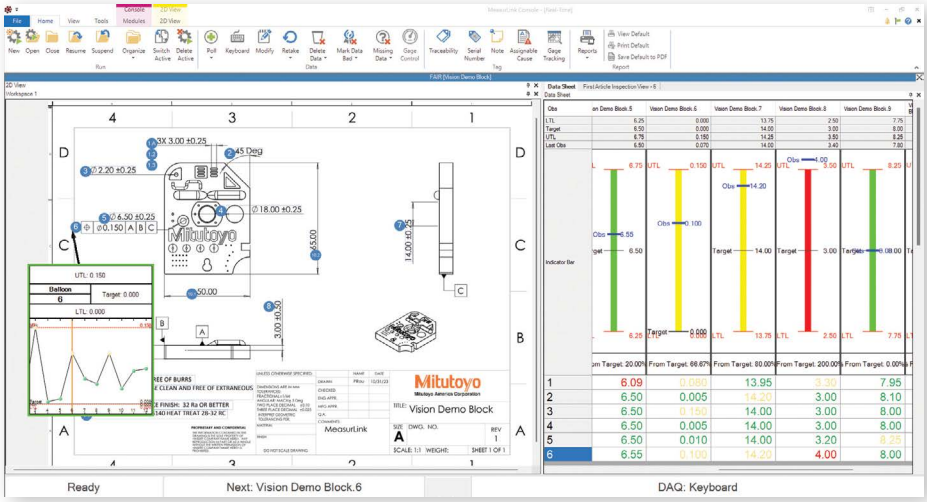

Scan a part print to bring it into MeasurLink® for easy ballooning and guidance during inspection.

- Collect more than measurement data (lot numbers, serial numbers, operators, machine lines, etc.)
- Barcode reader supported
- Assign causes to defects and provide corrective action instructions
- Configurable export options and report design
- Support for position tolerancing
- Password protected user accounts for data integrity
- 21 CFR Part 11 validation documents included
- Design and auto-trigger custom reports

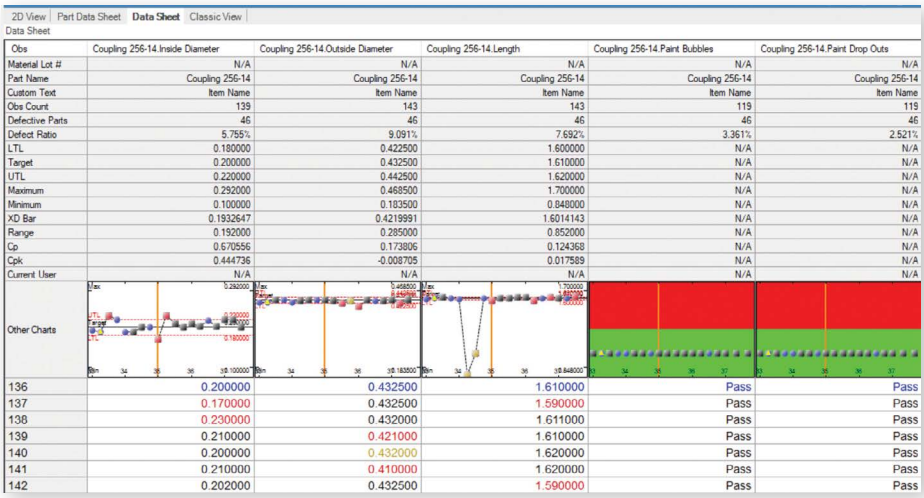

2D View | Part Data Sheet | Data Sheet | Classic View

Data Sheet

Obs	Coupling 256-14.Inside Diameter	Coupling 256-14.Outside Diameter	Coupling 256-14.Length	Coupling 256-14.Paint Bubbles	Coupling 256-14.Paint Drop Outs
Material Lot #	N/A	N/A	N/A	N/A	N/A
Part Name	Coupling 256-14	Coupling 256-14	Coupling 256-14	Coupling 256-14	Coupling 256-14
Custom Text	Item Name	Item Name	Item Name	Item Name	Item Name
Obs Count	139	143	143	119	119
Defective Parts	46	46	46	46	46
Defect Ratio	5.755%	9.091%	7.692%	3.361%	2.521%
LTL	0.180000	0.422500	1.600000	N/A	N/A
Target	0.200000	0.432500	1.610000	N/A	N/A
UTL	0.220000	0.442500	1.620000	N/A	N/A
Maximum	0.292000	0.468500	1.700000	N/A	N/A
Minimum	0.100000	0.183500	0.848000	N/A	N/A
XD Bar	0.1932647	0.4219991	1.6014143	N/A	N/A
Range	0.192000	0.285000	0.852000	N/A	N/A
Cp	0.670556	0.173806	0.124368	N/A	N/A
Cpk	0.444736	-0.008705	0.017589	N/A	N/A
Current User	N/A	N/A	N/A	N/A	N/A
Other Charts					
136	0.200000	0.432500	1.610000	Pass	Pass
137	0.170000	0.432500	1.590000	Pass	Pass
138	0.230000	0.432000	1.611000	Pass	Pass
139	0.210000	0.421000	1.610000	Pass	Pass
140	0.200000	0.432000	1.620000	Pass	Pass
141	0.210000	0.410000	1.620000	Pass	Pass
142	0.202000	0.432500	1.590000	Pass	Pass

Produce spreadsheets to easily see and generate raw data and statistics.

MeasurLink®

An Integrated Solution for Quality Data Management

A

Process Analyzer

Data Analysis Software for Engineers

Analyze data collected on all networked Real-Time stations in one place to identify problem areas, take corrective action, and improve the quality of your product. Inspection data can be merged, filtered, charted and printed to identify long-term trends and identify root causes for process improvement.

Process Analyzer is designed for viewing and manipulation of Real-Time data in a networked environment. It enables Quality Engineering to slice and dice data in meaningful ways that contribute to quality control initiatives.

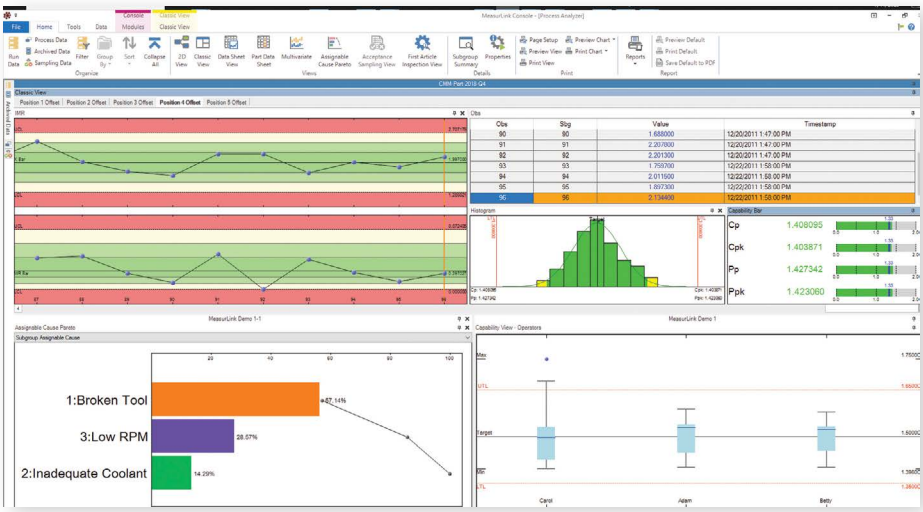

Produce interactive reports by selecting data sets of data to analyze. Several analysis tools are available, such as: Capability Analysis, Normal Probability, What-If Analysis, XBarR, Histogram, Pareto and more.

- Visualize data easier than ever with one-click analysis tools
- Conduct historical review of lots and electronic signatures
- Create custom report designs
- Pinpoint problem areas with filter tools
- Auto-generate First Article Reports (AS9102)

Have a question about your quality? Process Analyzer has the answer.

Order No.	Description
MLV11LM	MeasurLink® V11, One Licensed Module
MLV11FL	MeasurLink® V11, One Floating License, All Modules

The single floating license includes every module which can be used on any computer the company network. Perfect for power users or anyone who wants to get the most improvement out of their manufacturing process. (Real-Time Professional 3D Edition is not included).

MeasurLink® Defect Analytics for PowerBI

Interactive, Visual, Easily Sharable Across your Organization

Unlock advanced data insights from your MeasurLink® data by transforming complex data into meaningful narratives.

Customizable dashboards enable you to:

- Make data-backed decisions faster than ever before
- Quickly identify trends
- Pinpoint issues

Achieve increased operational efficiency, improved product quality, and an enhanced competitive advantage.

You can leverage the system's full capabilities on any device, providing greater flexibility and responsiveness.

Try the interactive online demo here:
https://measurlink.com/products/power-bi-measurlink

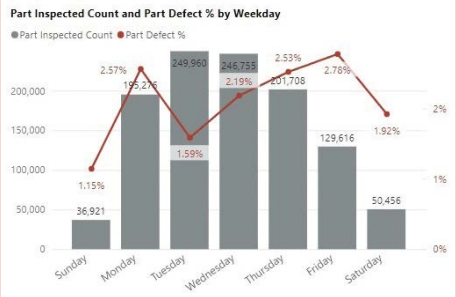

SPECIFICATIONS

Order No.	Description
MLV11BI	MeasurLink® Defect Analytics Report for Power BI

NOTE: The MeasurLink® Defect Analytics Report for Power BI is a report used in the Power BI application. This report is not included in workgroups or floating license options.

Report Scheduler

Automated Data Analysis and Reporting

This dynamic data reporting offers advanced filtering that can report on all data collected during a specified date range.

4 Easy Steps to Bring Analysis to You

1. Choose your report design
2. Set your conditions
3. Select your recipients
4. Create your schedule

A user can select which part numbers or batches they would like to report on before the measurement data exists. When the condition criteria is satisfied, users can receive a report with their analysis automatically, drastically saving them time from manually searching for and analyzing data.

For example, a user can schedule an email report to run each weekend, for defective parts for any part number, so Monday morning there will be a report on all runs added the previous week to all stake holders.

Order No.	Description
MLV11LM	MeasurLink® V11, One Licensed Module
MLV11FL	MeasurLink® V11, One Floating License, All Modules

The single floating license includes every module which can be used on any computer on the company network. Perfect for power users or anyone who wants to get the most improvement out of their manufacturing process. (Real-Time Professional 3D Edition is not included).

Where to Buy

Process Manager

Live Data Monitoring Dashboard

Monitor data as it is collected in Real-Time. Process Manager provides managers with the perfect tool to organize and maintain a shop-wide quality program at a glance. Display snapshot windows of characteristics that are currently being collected in MeasurLink® Real-Time. The data can be sorted by inspection station, capability or timestamp.

Easily see process information without walking from one inspection area to another by viewing current production across all machines. Show clients your quality operation for the entire facility.

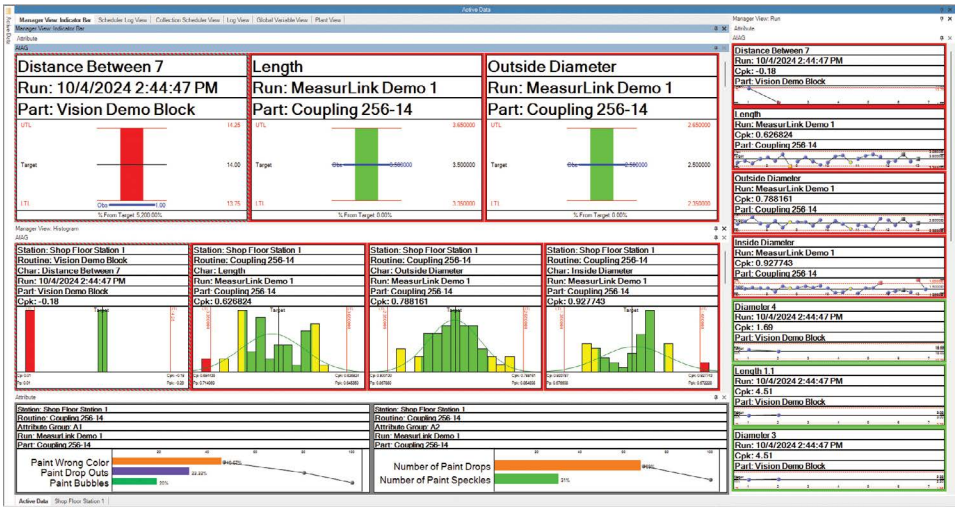

Gage R&R

Measurement System Analysis

MeasurLink® Gage R&R supports all the MSA-4 Gage R&R studies. Use the study wizard to help define the study that needs to be performed.

Data can be captured directly from hand tools, CMMs and other equipment for improved efficiency. Additionally supports ISO 9001 ISO 17025, and ISO 22000 activities.

Calculated ANOVA Statistics

Source	DF	SS	MS	F	P Value
Parts	9	53.9087	5.98985	23.113	0.00%
Appraiser	2	1.2686	0.63428	2.447	9.10%
Equipment	78	20.2145	0.25916	-	-
Total	89	75.3917			

	Std. Dev.	% Contribution
GRR	0.521	29.91%
EV	0.509	28.53%
AV	0.112	1.38%
PV	0.798	70.09%
TV	0.953	100.00%

	Within Study	Tolerance
PV	0.798	1.583
TV	0.953	1.667
% GRR	54.69%	31.27%
% EV	53.41%	30.54%
% AV	11.73%	6.71%
% PV	83.72%	94.98%

ndc 2

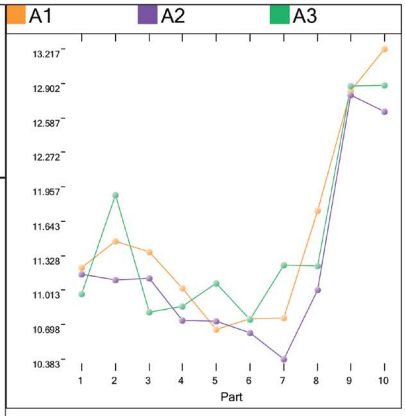

Number of Parts: 10
Number of Trials: 3
Number of Appraisers: 3

MeasurLink®

An Integrated Solution for Quality Data Management

A

Gage Management

Gage Inventory and Calibration Control

Gage Management provides a method for maintaining, organizing and managing information about gages.

Information such as measurement specifications, calibration recall dates, Gage R&R dates and general event history is provided in an intuitive user interface with complete reporting abilities. Calibration procedure setup is easy and flexible.

Mitutoyo *Certificate of Calibration*

Gage Description: Demo Purposes

Calibration Date: 12/11/2024

Calibrator: N/A

Calibrator Title: N/A

Serial Number: 81088

Gage Name: 6" Mitutoyo Caliper

Standard	Size	Tolerance	Unit	As Found	As Left	As Left Result
8" Gage Block-00	0.0000	± 0.0010	in	0.0000		
8" Gage Block-00	1.0000	± 0.0010	in	0.0000		
8" Gage Block-00	2.0000	± 0.0010	in	0.0020	0.0000	Pass
8" Gage Block-00	4.0000	± 0.0010	in	0.0000		
8" Gage Block-00	6.0000	± 0.0010	in	0.0000		

Name	Cal Date	Due Date	Trace ID
8" Gage Block-00	09/24/2024	11/24/2025	122889

Statements of conformance are based on the test values and tolerances shown above and when accounting for the measurement uncertainty using a simple acceptance decision rule. The measurement uncertainty = +/- 10un, which achieves better than a 4:1 test uncertainty ration. The uncertainty represents an expanded uncertainty expressed at approximately a 95% confidence level using a coverage factor of k=2. The errors shown above are test values for verification purposes only. As-found = as-adjusted. These test values are traceable to the National Institute of Standards and Technology through the listed Mitutoyo reference standards. Procedure: CLTM-3REV. C. Environment: 20 degrees C +/- 0.50 degrees C, RH 40% to 50%. This is a calibration certificate for demonstration purposes only. This certificate shall not be reporduced except in full without the written permission of Mitutoyo America Corporation.

Mitutoyo America Corporation
965 Corporate
Blvd, Aurora, Illinois 60502
Phone: 888-648-8869

This calibration was performed for demonstration purposes only.

Customized calibration certs can be designed per company requirements.

- Check in/check out
- Gage transfer history
- Print gage labels
- Store calibration certs
- Create calibration certs
- Create calibration procedures
- Auto email gages overdue for calibration
- Supports ISO 9001
- Reject data from uncalibrated tools when used with Real-Time
- Import gage list from legacy programs for easy transfer

Mitutoyo

Preliminary Instructions and Notes

- Calibration shall be performed in an environment that conforms to Manufacturer Specifications.
- The caliper will hereafter be referred to as the Instrument Under Test (IUT).
- Verify that the IUT is clean.
- Visually examine the IUT for any condition that could cause errors in the calibration.
- If a malfunction occurs or a defect is observed while calibration is in progress, the calibration shall be discontinued and necessary corrective action taken; if corrective action affects a measurement function previously calibrated, the function shall be recalibrated before the remainder of the procedure implemented.
- Use extreme care when removing dirt, fingerprints and other foreign substances so that cleaning solutions do not enter internal portions of the IUT.

Detailed Procedure

- [x] Examine all gaging surfaces for nicks, burrs, scratches, wear or other signs of mishandling that may affect accuracy of the instrument. Remove any positive surface imperfections utilizing a hard arkansas stone.
- [x] Apply sufficient amounts of cleaning solution to dampen a lint free cloth. Carefully clean all exposed surfaces removing all foreign substances and particulate matter.
- [x] Check O.D. jaws when in the closed position. Hold calipers to light source and visually examine for light between the jaws. Light will not be seen if jaws are parallel.
- [x] Check I.D. knife-edge jaws for wear when in the closed position. Caliper must be positioned squarely in line of sight to detect air gaps or surface imperfections between jaws.
- [ ] Verify zero setting of caliper by observing the indicated reading with jaws in the closed position. If caliper does not read 0.000, dial calipers can be easily adjusted to zero by loosening the bezel lock screw, then rotating bezel to align the zero graduation to the pointer.
- [ ] Record measurements in data grid.

Result	Standard ID	Units	(+) Tolerance	Standard Size	(-) Tolerance	Data
				1.000000		
				3.000000		
				4.000000		
				6.000000		

Record Temperature _____ Record Pressure _____

Internal calibrations can be performed and traceable to NIST by creating custom calibration procedures for calibration technicians to follow.

SPECIFICATIONS

Order No.	Description
MLV11LM	MeasurLink® V11, One Licensed Module
MLV11FL	MeasurLink® V11, One Floating License, All Modules

MeasurLink® Licensing

NEW LICENSES

Order No.	Description
MLV11LM	MeasurLink® V11, One Licensed Module
MLVL11FL	MeasurLink® V11, One Floating License, All Modules

UPGRADE LICENSES

Order No.	Description
MLV11LM-U	MeasurLink® V11, Upgrade One Licensed Module
MLVL11FL-U	MeasurLink® V11, Upgrade One Floating License, All Modules
MLV113D-U	MeasurLink® V11, Upgrade 3D Add-on for One Station - Requires a MeasurLink® V11 License

Upgrade an old version of MeasurLink for a special discount.

ADD-ON OPTIONS

Order No.	Description
MLVLFL-C	MeasurLink® V11, One Floating License, Conversion - Requires a MeasurLink® V11 License
MLV11BI	MeasurLink® Defect Analytics Report for Power BI
MLV113D	MeasurLink® V11, Upgrade 3D Add-on for One Station - Requires a MeasurLink® V11 License
64AAB934	MeasurLink® V11, Installation DVD and Flash Drive
64AAB935	MeasurLink® USB Code Meter Dongle

Bulk license and academic packages available by special quote. Please contact our sales department for details.

Find a Distributor

Product Licensing

Packages and Bundles

Mitutoyo is pleased to offer MeasurLink® without the need to purchase annual maintenance agreements. Mitutoyo offers different licensing options to support a variety of needs. Start small, go big, or anywhere in between! Workgroups are discounted packages for multi-license purchases.

Licensing Options

Fixed License

The MeasurLink license can be used for any of the licensed modules, which will be fixed to a computer. For example, Real-Time can be used on a single station to test a pilot cell, solve a specific application or monitor a critical line. The Gage R&R module can be used on a standalone station to perform Gage R&R tests. Track gage inventory and calibration schedules with the Gage Management module.

Floating License

MeasurLink®'s Floating License is an all-inclusive license. The number of floating licenses can be shared with anyone on the network and can use all modules (excluding Real-Time Professional 3D edition). Floating licenses are required for cloud or terminal server environments. A USB license dongle to manage available licenses is available as an option.

Floating License Benefits include:

- Easier maintenance of installations
- Includes all modules, no need to choose
- Cost-effective way to include more users without purchasing additional licenses
- Can be added to an existing installation or integrated during the initial installation

Database Management System (DBMS) Requirements

MeasurLink® 11 ships with Microsoft® SQL Server Express Edition 2025. This edition can be used to support a standalone or multi-machine workgroup installation. (We recommend 5 licenses or fewer when using SQL Server Express).
MeasurLink® 11 supports the following Microsoft® SQL Server Standard and Enterprise Editions: 2025, 2022, and 2019.

Operating System Requirements

All MeasurLink® 11 products are supported on all Windows 11 versions (not including IoT versions).

Hardware Requirements

These requirements are the minimum for the Windows® OS and may not provide optimum performance. In general, the more powerful the PC, the faster the response times!

- 1 gigahertz (GHz) or faster processor (review published requirements for the specific Windows 11 version in use)
- 8 gigabytes (GB) RAM (more if multitasking)
- 20 GB available hard disk space (more if also hosting the MeasurLink database on the same computer)

USB-ITPAK V3.0

Data Collection Software for Excel

A

Measurement Data Collection Software USB-ITPAK V3.0

(**IT-016U**/**IT-020U**/**USB-ITN**/**U-WAVE**/**DP-1VA LOGGER** can be used to send the data to a Microsoft® Excel® worksheet.)

- **USB-ITPAK V3.0** creates a procedure to input data from gages equipped with Digimatic output to Excel spreadsheets via **264-020**, **USB-ITN** or **U-WAVE**. This optional software facilitates the daily inspection work for mass-produced products.

V3.0 (Free version)	Full Version	Function
—	✓	Sequential measurement: Inserts measurement data into the inspection certificate (Excel)
—	✓	Simultaneous measurement: Simultaneously collects measurement data from multiple measuring instruments mounted on a jig
—	✓	Individual measurement: Collects measurement data of separately conducted inspections into a single PC
✓	✓	Simple measurement function: Automatically sorts measurement data and inserts the data into different columns in Excel
✓[1]	✓[1]	Setting of measuring instrument: Sets the calibration year and month, preset values, zero-setting, etc. for a measuring instrument
✓[1]	✓[1]	Measurement history: Records operators and measuring tools used in measurement data

Symbol: ✓[1]: Can be used only when connected with **USB-ITPAK V3.0**, **ID-CNX**/**ID-FNX** and **06AGQ001A, 06AGQ001F**/**264-020**.
✓: Can be used — Cannot be used

Note 1: **V3.0** can be downloaded from our website.
Note 2: **V3.0**, full version can be used by purchasing **V3.0** (**06AGR543**) and connecting a USB dongle to your PC.

Main Features of USB-ITPAK V3.0

- **Setting of Microsoft Excel input:**
  Designation of where to input (workbook, worksheet, cell range), cursor move (right, down), and others.
- **Selection of measuring method (3 modes available)**
  1) Sequential measurement 2) Simultaneous measurement 3) Individual measurement.
- **Control item and instruction at data input**

Control item	Mouse operation	Function key	Foot switch + USB-FSW	Data switch when using **U-WAVE**	Data switch other than **U-WAVE**
Data output request	✓*1	✓*1	✓	✓*2	✓
Data cancel	✓*1	✓*1	✓	✓ Press and hold*2	
Data skip	✓*1	✓*1	✓		
Character input (example: OK or NG etc.)			✓ Pre-registered character strings		

*1 Not available during individual measurement.
*2 Not available during simultaneous measurement in the event driven mode.

- **Number of connectable gages**

Available devices	Maximum number of connection (total of (1), (2), and (3))	Others
1) **Input Tool**/**Input Tool Direct**	For Windows 2000/XP Up to 100 units*3	• Maximum registration (total of (1), (2), and (3)) 400 units
2) **USB-FSW**	For Windows Vista/7/8/8.1/10 Up to 20 units*3	• Control/identification of connecting gage VCP (Virtual COM port) Switch from HID to VCP for (1) and (2). The VCP driver software is supplied with **USB-ITPAK**.
3) **U-WAVE-R** (Up to 100 gages connectable to each **U-WAVE-R**. **U-WAVE-T** ID: 00 to 99)	(For **U-WAVE-R**, plus 100 per unit in terms of available gages.)	

- **Data loading time**: when using **USB Input Tool** and **Input Tool Direct** cables, 0.2 s to 0.3 s per gage unit
  U-WAVE event driven mode: 0.5 s data refresh interval
- **Timer input function** (only in simultaneous measurement)
  Input interval (time): 0.1 s*4 to 24 hours at maximum
- **Measurement date/time display function** (available in sequential and simultaneous measurements)
  The display format is subject to the setting of the Excel sheet.

*3 The actual number can be less depending on the system configuration.
*4 If a shorter time is set, a priority is given to the longer time compared with the actual communication time.

Optional Accessories for USB-ITPAK

USB Foot Switch Adapter USB-FSW

This USB adapter for connecting a PC is required when using the Foot Switch (**937179T**) in **USB-ITN**.
A dedicated VCP driver for this adapter is included in **USB-ITPAK**.

Main Specification

- With **USB-ITPAK**, application of the foot switch can be set.
- Data control: "Data request","Data cancel", "Data skip"
- Character string input (e.g. GO/NG, etc.)

Note: **USB-FSW** is used for installation of the VCP driver.

Foot Switch Adapter USB-FSW

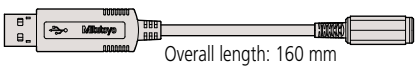

Overall length: 160 mm

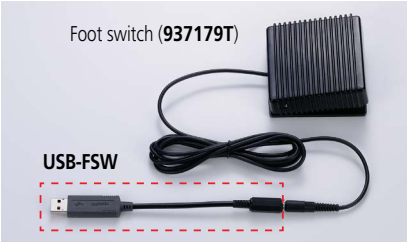

Optional Accessories

Model	**USB-ITPAK V3.0**
Order No.	**06AGR543** (USB dongle only)
Compatible OS (Windows)	Windows 10 and 11 (64 bit only)
Compatible Excel version	Excel 2010, 2013, 2016, Microsoft 365

Upgrading from **V1.0**/**V2.0** is not supported.

USB-ITPAK V3.0

Download software

USB dongle

A USB dongle must be connected to the PC running the software.

Operating Environment

Compatible OS*1	**USB-ITPAK V3.0**: Windows 10 and 11 (64 bit only)
Supported Excel versions*2	**USB-ITPAK V3.0**: 2010, 2013, 2016 Microsoft 365
Hard disk	**USB-ITPAK V3.0**: Free space of more than 15 MB
CD-ROM drive	For program installation*4
USB port*3	2 ports or more
Monitor resolution	**USB-ITPAK V3.0**: 1024x768, 256 colors or more

*1 32-bit, 64-bit OS supported
*2 Operation with Excel for MAC OS is not guaranteed.
*3 A commercially available hub can be used. (USB certified product is recommended)
*4 **V3.0** does not require a CD drive but does require an Internet connection for download.

Language Support

- Operation language (15 languages)
  Japanese, English, German, French, Spanish, Italian, Czech, Swedish, Turkish, Polish, Hungarian, Russian, Korean, Chinese (traditional/simplified)
- Operation manual (PDF file)
  Japanese, English, German

Model	**USB-FSW**
Order No.	**06ADV384**

USB-ITPAK V3.0

Data Collection Software for Excel

Example of Measurement Using the U-WAVE Series Wireless Communication System

<Data Sorting of Induvidual Measurement>

Data from Multiple Digimatic Gages (U-Wave-T, U-Wave-TM/TC) Sent to Separate Excel Sheets

Measurement data from multiple measuring instruments can easily be sorted and inserted into the respective sheets in Excel.

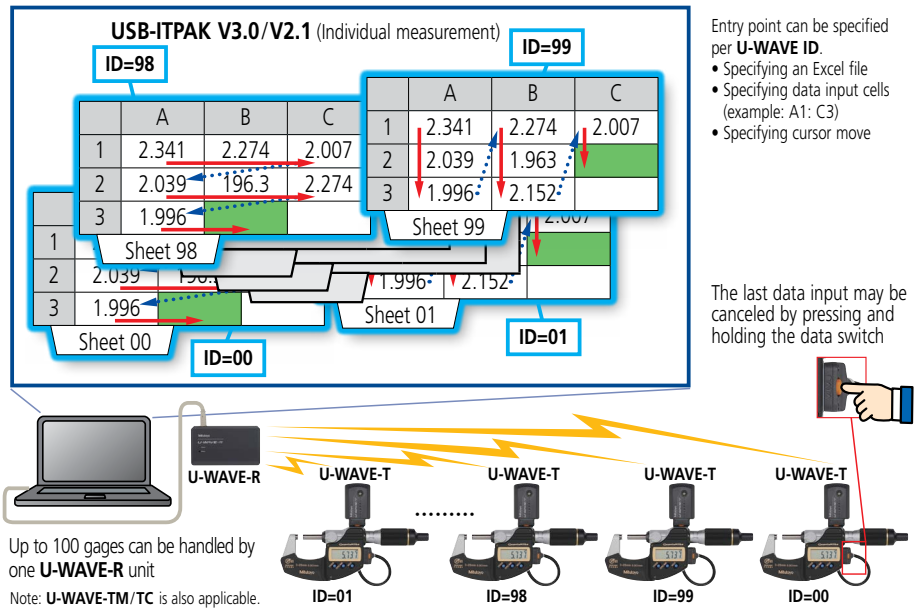

Up to 100 gages can be handled by one **U-WAVE-R** unit

Note: **U-WAVE-TM/TC** is also applicable.

<Timer Input + Measurement Date/Time Display Durring Simultaneous Measurement>

Automatically Obtains Displacement Data in a Certain Input Interval

The event-driven operation function of **U-WAVE** enables data collection at a preset time by timer.

USB-ITPAK V3.0/V2.1 simultaneous measurement + timer input (example: 5 s interval)

	A	B	C	D	E	F	G
1	Displacement 1)	Displacement 2)	Displacement 3)	Displacement 4)	Displacement 5)	Displacement 6)	Measurement date/time
2	0.281	0.162	0.121	0.051	0.011	–0.001	2013/4/1 7 30 00
3	0.279	0.152	0.133	0.064	0.018	–0.003	2013/4/1 7 30 05
4	0.265	0.149	0.142	0.089	0.021	–0.007	2013/4/1 7 30 10
5							
6							

5 s
5 s
5 s

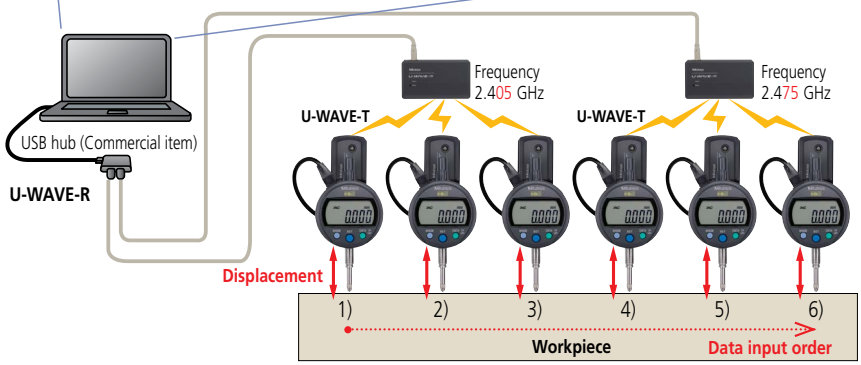

The input interval can be arbitrarily set by 0.1 second intervals up to 24 hours. If a smaller value than the data loading time is set, the actual measurement time will be the input interval.
With **U-WAVE**, an error (no data) may occur if less than 0.5 seconds is set for the input interval. This is because the data request signal is issued before the data comes in, based on the event driven data refresh interval that is set to 0.5 seconds (fixed).

Talk to Sales

Mitutoyo

USB-ITPAK V3.0

Data Collection Software for Excel

Measurement Data Management

USB-ITPAK V3.0 (IT-016U/IT-020U/USB-ITN/U-WAVE/DP-1VA LOGGER connectable)

A

A Desired Measurement Sequence to Collect Data into Excel can be Created by Using USB-ITPAK with an Input Tool or U-WAVE.

Measurement Applications of USB-ITPAK (Three examples of how **USB-ITPAK** can be deployed are shown below)

Sequential Measurement: Measurement values are collected from multiple measuring instruments as registered in the sequence

(Measurement example – see figure at right)

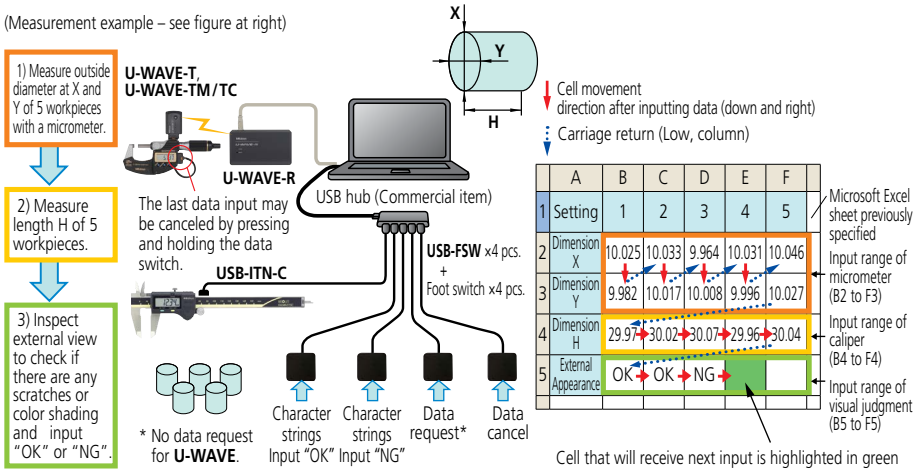

When a measuring procedure is executed, a window is displayed. "Data request*", "Data cancel*", "Data skip*", "Aborting", "Complete" can be specified.

* These operations can be allocated to the function key or foot switch (via **USB-FSW**).

Simultaneous Measurement: Measurement values are input simultaneously from several Digimatic gages

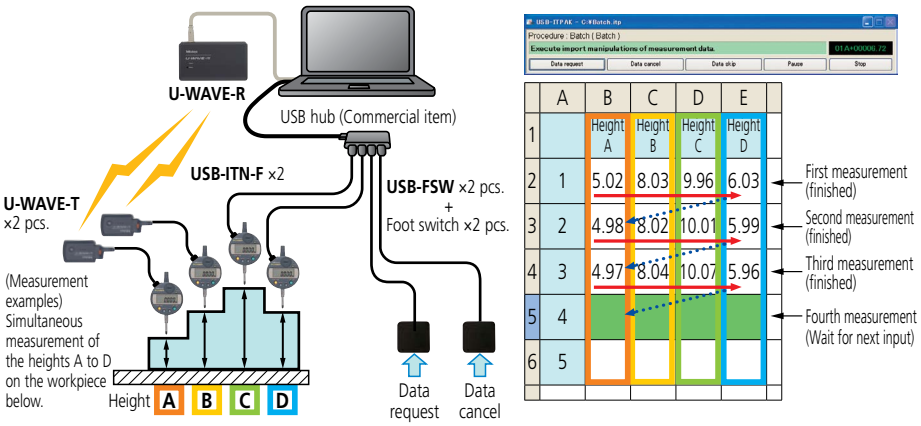

Individual Measurement: Several operators input measurement data asynchronously according to individually defined procedures from each Digimatic gage.

(Measurement example) Two operators measure 6 workpieces 3 workpieces per operator

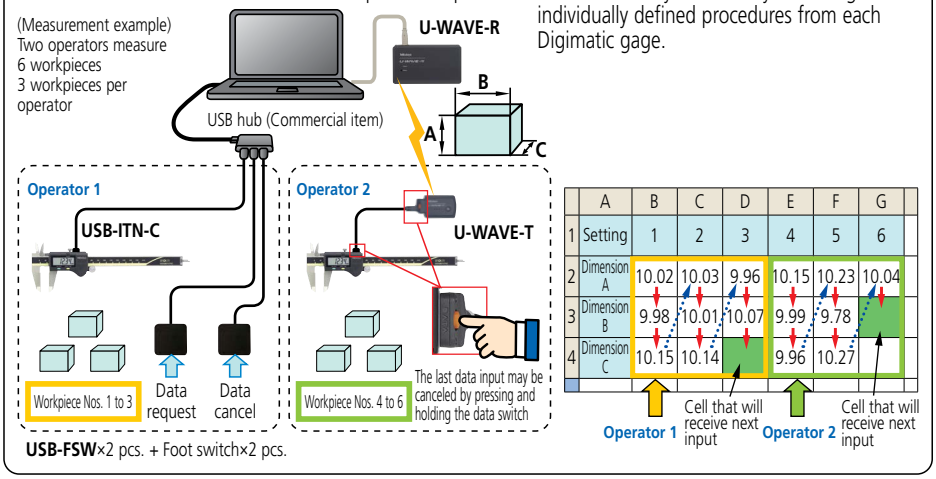

Notes on using USB-ITPAK V3.0:
Do not merge the cells in the specified range as a measurement data input.
During measurement, the Microsoft Excel worksheet cannot be modified in any way apart from entering data. If you need to modify the sheet, it is necessary to abort or finish the measurement.
U-WAVE fit *Bluetooth*® and U-WAVE Wireless cannot be used together.

USB-ITPAK V3.0

Data Collection Software for Excel

A

Bidirectional Serial Communication

With bidirectional serial communication (Digimatic S1) enabled measuring instruments, it is possible to use **USB-ITPAK V3.0** on a PC to control, configure, and collect information from the measuring instruments in addition to ordinary measurement data collection. This reduces labor and time for inspection and greatly increases efficiency.

Digimatic S1 Applicable Model Example of measurement using the **ID-CNX/ID-FNX**

Function example (1) Control of ID-C/ID-F from PC

ID-CNX/ID-FNX + USB-ITPAK V3.0

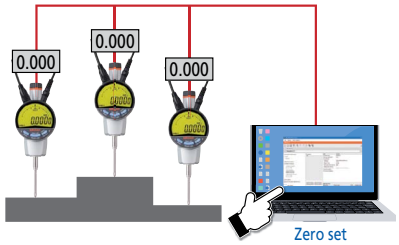

- It is possible to zero-set or preset measuring instruments collectively from **USB-ITPAK V3.0** on a PC.

Instruments not supporting bidirectional serial communication + USB-ITPAK

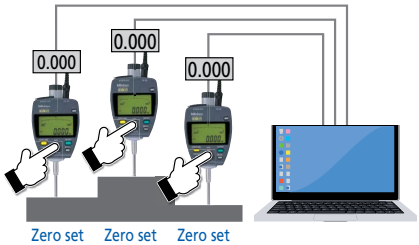

- It is necessary to manually zero-set or preset measuring instruments individually.

Function Example (2) Measuring Instrument Setting

ID-CNX/ID-FNX + USB-ITPAK V3.0

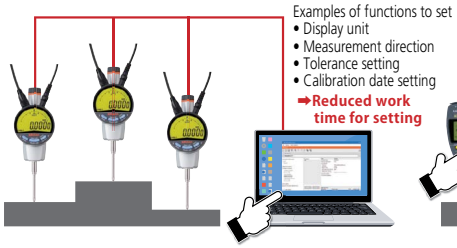

- It is possible to set the functions of measuring instruments from **USB-ITPAK V3.0**.
- The settings of functions can be saved on a PC and copied to other measuring instruments.

Instruments not supporting bidirectional serial communication + USB-ITPAK

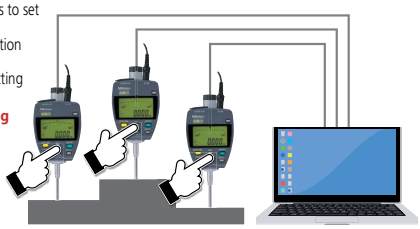

- It is necessary to manually change the settings.

Note: The above is possible only when bidirectional serial communication (Digimatic S1) enabled measuring instruments are used with USB Input Tool Direct or **264-020**. It is not possible with measuring instruments not supporting Digimatic S1 or **U-WAVE** Series.

Got Questions?

U-WAVE

Wireless Data Collection System

A

What is the U-WAVE Series?

- The **U-WAVE** Wireless Measurement Data Communication System quickly collects accurate measurement data from the on-site inspection process to help perform detailed analysis.
- Measurement results can be sent wirelessly and saved on a PC, smartphone or tablet. This is a smart system not requiring handwriting or manual input from a keyboard.

Acquire measurement data from various Digimatic gages equipped with U-WAVE. → **Instantly transfer data wirelessly to your PC, smartphone or tablet.**

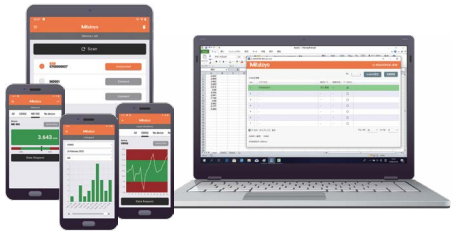

You can choose from a variety of products and applications.

Stable communication is possible up to a maximum communication distance of 16-20 m*.
Efficiency is greatly improved by being able to work without worrying about cable length or snags, etc.

- Freedom of movement
- Human error during manual input is eliminated
- Flexible layout of measurement site
- Stable wireless communication

Note: Receiver not necessary when using with **Mitutoyo *Bluetooth*® U-WAVE fit**

*May be affected by the electromagnetic environment.

The following three types are currently available.

U-WAVE Wireless

The system consists of a "**U-WAVE-R**" receiver that connects to a PC and a "**U-WAVE-T**" transmitter that connects to a measuring instrument.

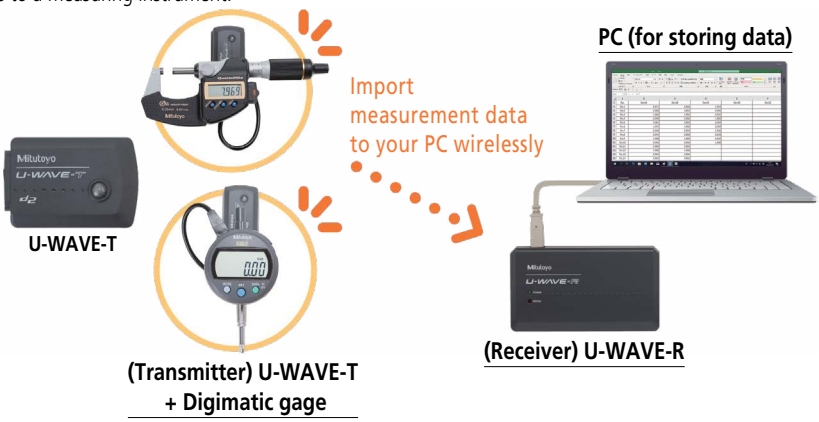

Function Comparison Table

	U-WAVE Wireless	U-WAVE Bluetooth
Communication protocol	Mitutoyo Original <based on IEEE80a2.15.4>	Bluetooth® 4.2
Communication distance	**Approx. 20 m** (line of sight)	Approx. 16 m (line of sight)
Communication frequency	2.405 to 2.475 GHz	2.402 to 2.480 GHz
Selectable frequency	Yes	Frequency hopping spread spectrum
Selectable control key	**Yes (enter, tab, left, right, up, down)**	No (simulates enter key only)
Battery life	**Approx. 400,000 transmissions**	Approx. 50,000 to 200,000 transmissions
Operating system	Windows	Windows, **iOS, Android**
U-Wave-R compatible	Required (P/N: 02AZD810D)	**No**
Maximum number of connections	**100**	7 (PC) **3 (mobile devices)**
Operation modes	Keyboard emulator or VCP	
Measurement modes	Button or event driven (data request from PC or on timed interval)	
Long button press	Cancel data command	
LED	Data confirmation and low battery warning	
Data export	Microsoft® Excel® or SPC software applications	
Durability	Dust/waterproof and shop-hardened with proprietary fiber-reinforced plastic housing	
Dedicated application/software	**U-WAVEPAK** (included with **U-WAVE** receiver) **USB-ITPAK**	**U-WAVEPAK-BW U-WAVEPAK-BM U-WAVE Navi USB-ITPAK**

Find a Distributor

U-WAVE fit

Part of the **U-WAVE** Wireless system, these transmitters are smaller and thinner, and have improved operability, being designed specifically for use with small Digimatic gages.

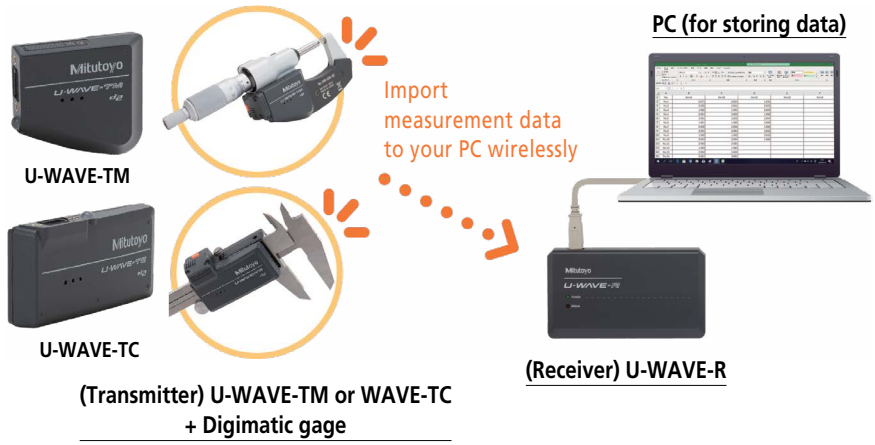

U-WAVE TIB

The all-in-one Bluetooth transmitter dedicated to the SJ-220 supports bidirectional communication.
See section J for more details

With Wireless Unit for Measuring Instrument U-WAVE-TIB installed

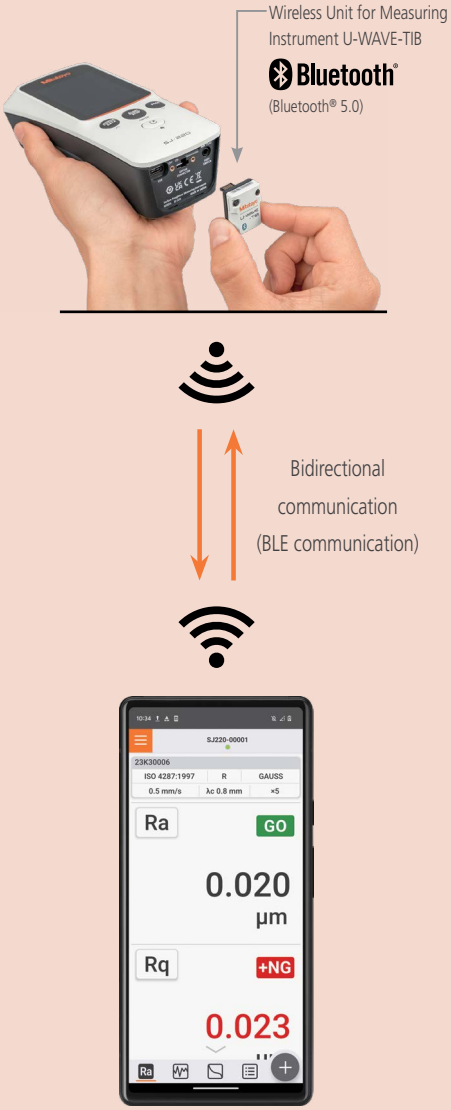

U-WAVE *Bluetooth®*

This is a ***Bluetooth***® version of **U-WAVE fit**. It can connect to a ***Bluetooth***® enabled device such as a PC, smartphone, or tablet without going through a **U-WAVE-R** or similar dedicated receiver.

Note: Connectivity of the dedicated Mitutoyo **U-WAVE fit *Bluetooth***® application and **U-WAVE-TMB/TCB** to every single Bluetooth® device is not guaranteed.

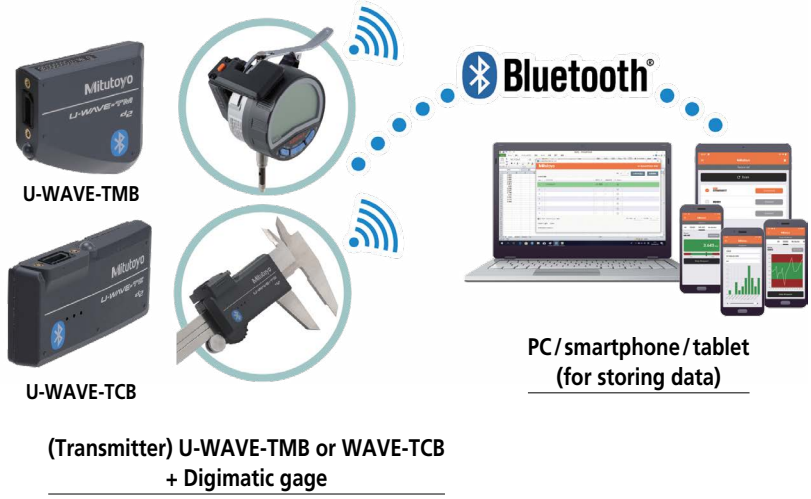

U-WAVE Wireless

Wireless Data Collection System

U-WAVE-TM/TC (U-WAVE fit)

- **U-WAVE fit** models are now smaller and thinner with improved operability, designed specifically for use with small Digimatic gages.
- The system using our proprietary transmission method features stable communication and low power consumption, resulting in improved work efficiency.
- The wireless system without cabling can keep the workplace tidy and increase workability during measurement.
- Up to 100 Digimatic gages can be registered to a single **U-WAVE-R**, and wireless communication distance is approx. 20 m. Therefore the measurement data can be managed centrally on the shop floor.
- Installing the optional **USB-ITPAK V3.0** software enables the use of Excel to improve measurement efficiency. It makes it possible to populate the data from multiple measuring instruments into separate spreadsheets or input the data collectively at the same time.

U-WAVE-TM/TC (U-WAVE fit) System Communication Specifications

- Wireless communication

Wireless specifications	Original <based on IEEE802.15.4 (2.4 GHz)>
Wireless communication distance	Approx. 20 m (line of sight)
Wireless communication speed	250 kbps
Transmission output	2.5 mW (4 dBm) or less
Modulation method	DS-SS (Direct Sequence - Spread Spectrum) Resistant to interfering signals and noise
Communication frequency	2.405-GHz band (ISM band: Universal frequency)
Used band	15 channels (2.405 to 2.475 GHz at intervals of 5 MHz) The noise search function avoids interference with other communication devices.

U-WAVE fit system configuration

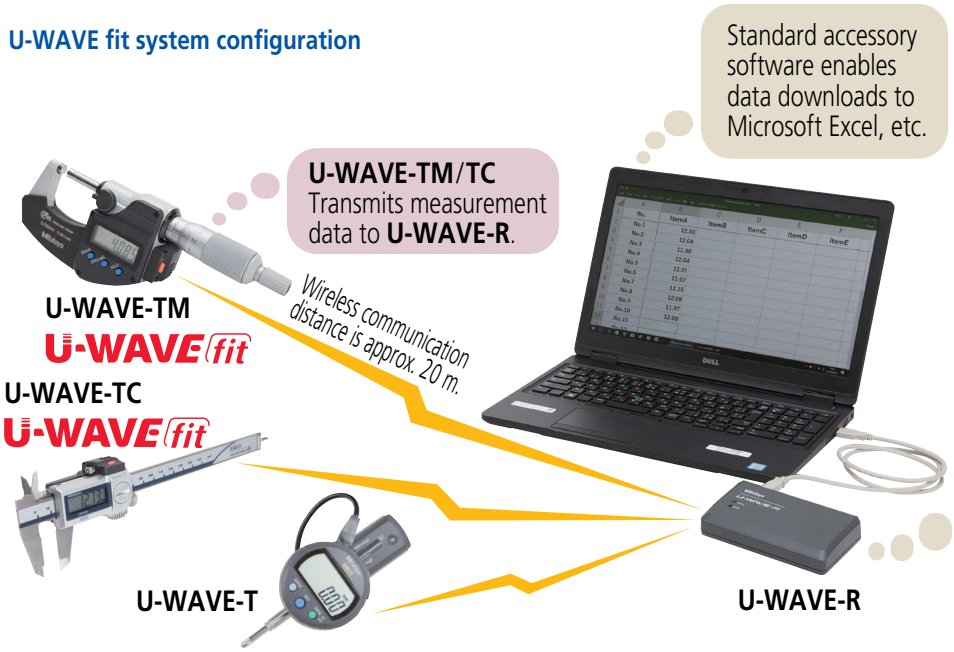

U-WAVE-R

Model	U-WAVE-R
Order No.	**02AZD810D**
Power source	USB bus power system
Number of **U-WAVE-R** units that can be connected to one PC	Up to 15
Number of **U-WAVE-T** units that can be connected	Up to 100
External dimensions (mm)	140×80×31.6
Mass (g)	130

U-WAVE-R main unit

USB2.0 cable (1 m) attached

U-WAVEPAK

Main Specifications of U-WAVEPAK

- Setup of dedicated driver software (USB and virtual COM port)
- Initial setting of ID number and frequency selection (required only once for the first time)
- Load data to Microsoft Excel or Notepad through the data interface function

U-WAVEPAK software (standard accessory)

System Environment: Compatible OS
Windows 2000 Professional (SP4 or later)
Windows XP Home Edition (SP2 or later)
Windows XP Professional (SP2 or later)*
Windows Vista*, Windows 7*, Windows 8/8.1*
Windows 10*
Windows 11 Version 1022B or later
* 32-bit, 64-bit OS supported
<Versions confirmed operational on Windows 10>
- **U-WAVEPAK Version1.020** or later

Connectability confirmed for tablet PC
- Microsoft Surface Pro 6 (the version whose operation on Windows 10 Professional is confirmed)
- Required environment: DVD drive (required for installation), USB port ×2 ports or more

Note: Cannot be connected to a device other than a PC (such as **DP-1VA LOGGER**, sequencer etc.).

U-WAVEPAK software can be downloaded here.

Need Support?

U-WAVE Wireless

Wireless Data Collection System

A

Typical Applications

U-WAVE-TM (264-622)

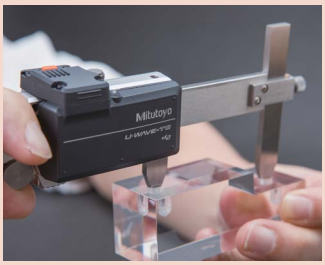

U-WAVE-TC (264-620)

Fit Transmitter/connecting unit

264-622

02AZF310

264-621

02AZF300

SPECIFICATIONS

IP67 type is resistant to water and dust ingress. Buzzer type notifies data reception by buzzer sound and LED.

Connectable measuring instruments	Micrometer		Caliper	
Model	**U-WAVE-TM** (IP67 type)	**U-WAVE-TM** (buzzer type)	**U-WAVE-TC** (IP67 type)	**U-WAVE-TC** (buzzer type)
Order No.	**264-622**	**264-623**	**264-620**	**264-621**
Protection Rating	IP67	N/A	IP67	N/A
Data reception indication	LEDs	Buzzer and LEDs	LEDs	Buzzer and LEDs
Power source	Lithium battery CR2032×1			
Battery life	Approx. 400,000 times continuous data transmission			
External dimensions (mm)	41.9×12.9×38.8		56×11.45×30.4	
Mass (g)	18			

Fixed to transmission unit and inserted into output connector of Digimatic gage.

Order No.	**02AZF310**	**02AZF300**	**02AZF960**	**02AZF700**
Protection level	IP67	N/A	IP67	N/A
Mass (g)	6			10
Connectable transmitter	**U-WAVE-TM/TC** (IP67 type)	**U-WAVE-TC** (for standard type)	**U-WAVE-TM** (for **QuantuMike***)	**ID-CNX/ID-FNX** (12.7mm type only)

Note 1: **02AZF310** ensures water-proof performance only when attached to measuring instruments of IP67 type.
For information on supported connecting units, please contact your local Mitutoyo sales office.
Note 2: Water-proof performance is ensured only when attached to measuring instruments of IP67 type.
* **02AZF960** is applicable to new models (**293-14X-40**/**293-18X-40**).

Compatibility of Measuring Tool and Unit

Digimatic gage			Connecting unit/connecting cable			Transmitter			Receiver
Digimatic Micrometers		+	Standard type	02AZF310	+		Buzzer type **U-WAVE-TM 264-623**	+	**U-WAVE-R 02AZD810D**
			QuantuMike*	02AZF960		IP67	IP67 type **U-WAVE-TM 264-622**		
Digimatic Calipers			Standard type	02AZF300			Buzzer type **U-WAVE-TC 264-621**		Design registered in Japan
			Coolant-proof type	02AZF310		IP67	IP67 type **U-WAVE-TC 264-620**		
Digimatic Indicators and Others			**ID-CNX/ID-FNX** Series (12.7 mm type only)	02AZF700			Buzzer type **U-WAVE-TM 264-623**		
			Other	Connecting cable Bracket		IP67	IP67 type **U-WAVE-TM 264-622**		
							Buzzer type **U-WAVE-T 02AZD880G**		
						IP67	IP67 type **U-WAVE-T 02AZD730G**		

* **02AZF960** is applicable to new models (**293-14X-40**/**293-18X-40**).

Mitutoyo

U-WAVE Wireless

Wireless Data Collection System

U-WAVE-T

- The system using our proprietary communication method features stable communication and low power consumption, resulting in improved work efficiency.
- It can be connected to various types of tools using optional special connection cables.

Model	**U-WAVE-T** (IP67 type)	**U-WAVE-T** (buzzer type)
Order No.*	**02AZD730G**	**02AZD880G**
Protection Rating	IP67	None
Data reception indication	LEDs	Buzzer and LEDs
Power source	Lithium battery CR2032×1	
Battery life	Approx. 400,000 transmissions	
Dimensions (mm)	44×29.6×18.5	
Mass (g)	23	

* To use this product, conformity to the applicable radio law in each country is required. Code number differs depending on the destination country. Please contact your nearest M³ Solution Center.

U-WAVE-T System Configuration

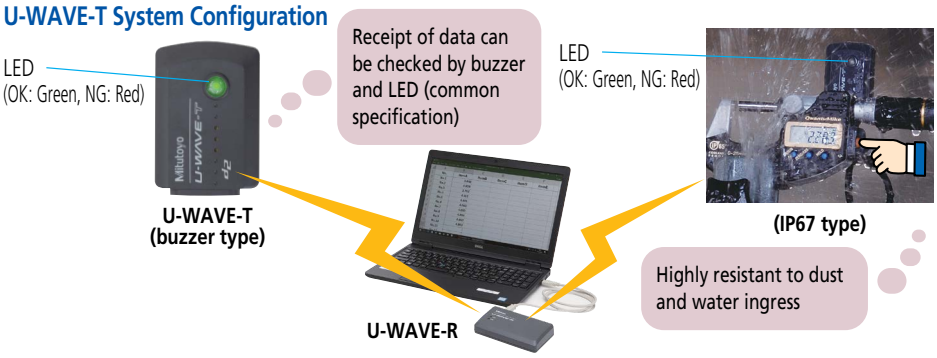

U-WAVE-T dedicated connection cable

A dedicated cable connects a Digimatic gage to **U-WAVE-T**. Check the connector (A to G, SA and SF) compatible with the Digimatic gage to be used and select either standard type (figure 1) or foot switch type (figure 2) according to your application. Refer to Pages A-28 through A-30 for connector tool type.

Type	Standard connection cable	Connection cable for foot switch
	Order No.	**Order No.**
(A) Water-proof model with output button	**02AZD790A**	**02AZE140A**
(B) Water-proof model with output button	**02AZD790B**	**02AZE140B**
(C) With data-out button	**02AZD790C**	**02AZE140C**
(D) 10-pin plain type	**02AZD790D**	**02AZE140D**
(E) 6-pin round type	**02AZD790E**	**02AZE140E**
(F) Plain type straight	**02AZD790F**	**02AZE140F**
(G) Plain type straight water-proof model	**02AZD790G**	**02AZE140G**
(SA) Water-proof straight model with data output button	**n/a**	**n/a**
(SF) Straight standard type	**02AZG011**	**02AZG021**

Standard accessory clip for cable fixing

Application example of the clip

9 types of connector

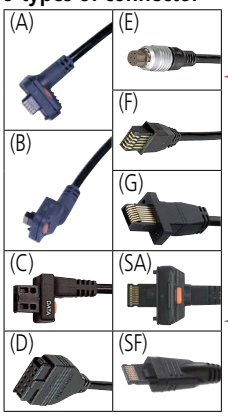

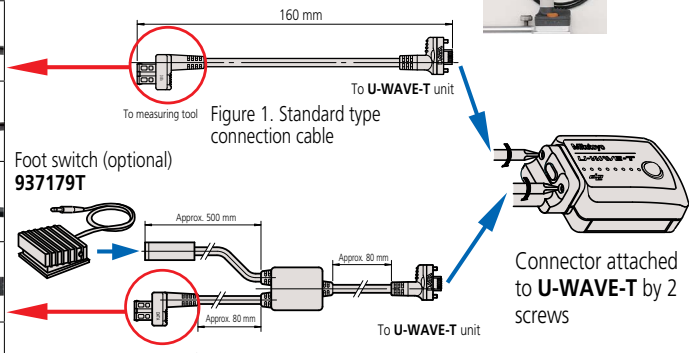

Figure 1. Standard type connection cable

Figure 2. Connection cable for foot switch

- Data format

Example of format when the Digimatic gage displays 12.34

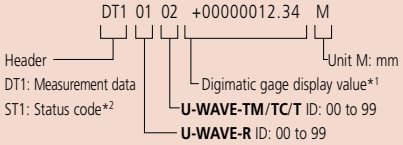

*1 Data interface function is switchable to "Measurement value only"
e.g.) 12.34

*2 Example of status code format

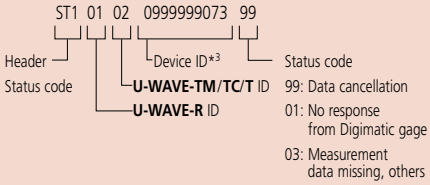

*3 Unique number assigned to **U-WAVE** at shipment

Notes on Identification of Measurement Data and Multiple Systems Operation

Following the above format, the **U-WAVE** data format starts with a 4-digit code where the first two digits represent receiver channels and the last two are transmitter channels. The large number of transmitter/receiver combinations possible with this scheme ensures that the receivers in a factory measurement system only accept data from the intended transmitters, even when several receivers are all within communication range of different transmitters using the same channel. Different frequency bands (up to 15 available) may also be used to further ensure that there are no communication problems between adjacent **U-WAVE-R** units.

U-WAVE-T (U-WAVE fit) System Communication Specifications

- Wireless communication

Wireless specifications	Original <based on IEEE802.15.4 (2.4 GHz)>
Wireless communication distance	Approx. 20 m (line of sight)
Wireless communication speed	250 kbps
Transmission output	0 mW (1 dBm) or less
Modulation method	DS-SS (Direct Sequence - Spread Spectrum) Resistant to interfering signals and noise
Communication frequency	2.405 to 2.475 GHz
Used band	15 channels (2.405 to 2.475 GHz at intervals of 5 MHz) The noise search function avoids interference with other communication devices.

Optional Accessories for U-WAVE

U-WAVE-T Mounting Bracket

Supports the **U-WAVE-T** on a Digimatic gage by detachable fastener. Batteries can be replaced without needing to detach the **U-WAVE-T** from the gage.

U-WAVE-T mounting bracket
02AZE200
Standard accessories
- Detachable fasteners: 1 set
- Mounting screw: 2 pcs.

Mounting Diagram **(02AZE200)**

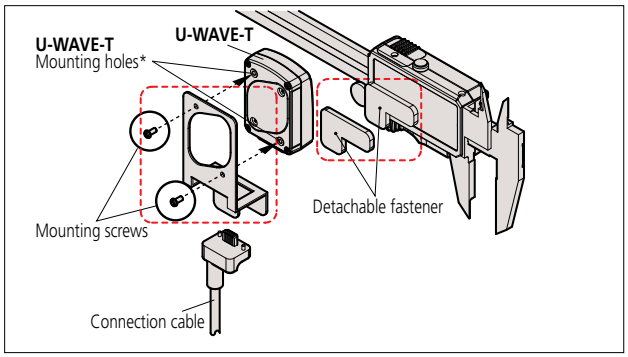

Note: In order to avoid loss of adhesion, do not allow oil or coolant to come into contact with the bonding surfaces of the detachable fasteners.

U-WAVE-TM/TMB Mounting Bracket for Digimatic Indicator

U-WAVE-TM/TMB
mounting bracket for **Digimatic indicator**
02AZF670/02AZF675
Standard accessories
- Mounting screw: 4 pcs.

Mounting bracket for ID

Mounting bracket for ID-N

Mounting Diagram **(02AZF670)**

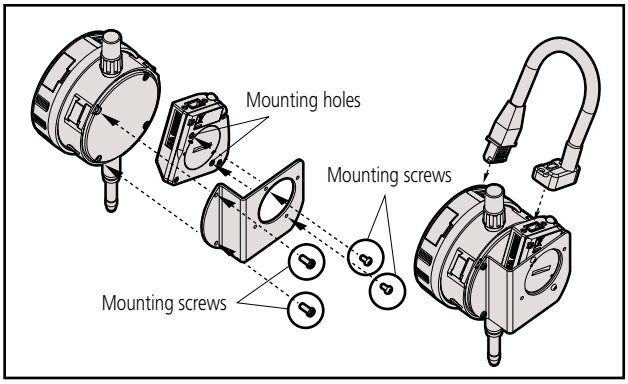

Find a Distributor

U-WAVE Bluetooth

Wireless Data Collection System

A

Wireless Measurement Data Communication System U-WAVE-TMB/TCB (U-WAVE fit Bluetooth®)

- Bluetooth® communication allows for wireless transmission of measurement data from Digimatic micrometers and calipers to PCs, smartphones, tablets and other such terminals.
- Bluetooth® communication does not require a conventional receiver unit (**U-WAVE-R**) which improves operability and reduces costs. Use in outdoor locations where PCs cannot be used can now be easily realized.
- **U-WAVEPAK-BM** (free), the measurement support application software for smartphones is available for download from app stores (Google Play, Apple Store).
- **U-WAVEPAK-BW** (free), the communication software for transferring measurement data to optional computer software (**USB-ITPAK, MeasurLink®**) is available for download from our company's website.
  https://www.mitutoyo.co.jp/eng/contact/products/u-wave/

U- WAVEPAK-BM

Get from Google Play

Download from App Store

U-WAVE fit *Bluetooth*® System Configuration

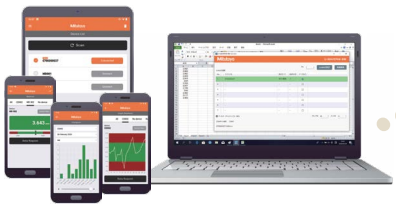

No receiver is required, and one PC can connect up to seven units of U-WAVE fit *Bluetooth*®.

For Digimatic micrometers

U-WAVE-TMB

For Digimatic calipers

U-WAVE-TCB

Example of attaching the Digimatic indicator

Measurement Navigation Application Mitutoyo U-WAVE Navi

- The application is for designing measurement procedures that use **U-WAVE fit *Bluetooth*®**.
- Allows setting of measuring points, methods (which tool to use), cautions in each measuring process. By allowing the insertion of image files into procedures, it enables anyone to measure in the same way and correctly.
- Since it also allows for entering the inspectors' names, it can be used to keep records of "when, where, who" performed the measurement.
- Workpiece information, procedures, as well as measurement results, can be managed on the application. It can also output data in CSV format.

Get from Google Play

Mitutoyo U-WAVE Navi is available for free download from Google Play.

Master how to use both applications according to your purpose.

	Mitutoyo U-WAVE Navi	U-WAVEPAK-BM
Purpose	Using the application, create a measurement procedure, display and navigate the measurement, and manage the measurement results	Measure a workpiece continuously to perform a simple trend management
Possible actions (Functions)	Create/perform a measurement procedure (including Go/No-go judgement) Navigate a measurement procedure Manage/transfer a measurement procedure Display a list of measurement results Transfer a measurement result	Judgment Data logging Graphical display of measurement result Display the histogram of measurement results Transfer a measurement result (log data)
Display language	Japanese/English (Depends on the OS settings)	English
Compatible OS	Android 7.0 or later (iOS not supported)	Android 7.0 or later/iOS 10.0 or later

U-WAVE-TMB/TCB (U-WAVE fit *Bluetooth*®) System Communication Specifications

- Wireless Communication Specifications

Wireless communication	Bluetooth® 4.2 Low Energy
Wireless communication distance	Approx. 16 m (line of sight) Approx. 10 m (in a factory environment)
Transmission output	2.5 mW (5 dBm) or less (Class2)
Modulation method	FH-SS (Frequency-hopping spread spectrum)
Communication frequency	2.4 GHz band

Note 1: Connectivity of **U-WAVE-TMB/TCB** to every single Bluetooth® device is not guaranteed.

Optional Accessories

Model	USB-ITPAK V3.0
Order No.	**06AGR543** (USB dongle only)
Compatible OS (Windows)	Windows 10 and 11 (64 bit only)
Compatible Excel version	Excel 2010, 2013, 2016, Microsoft 365

Note: Applicable only when **U-WAVEPAK-BW** is used.

USB-ITPAK V3.0

Download software

USB dongle

A USB dongle must be connected to the PC running the software

Note: Google Play and the Google Play logo are trademarks of Google LLC. Apple and the Apple logo are trademarks of Apple Inc.

Where to Buy

U-WAVE Bluetooth

Wireless Data Collection System

A

Typical Applications

U-WAVE-TMB (264-626)

U-WAVE-TCB (264-625)

Transmitter / Receiver

264-626

02AZF310

264-625

02AZF300

SPECIFICATIONS

	For Digimatic micrometers		For Digimatic calipers	
Model	**U-WAVE-TMB** (IP67 type)	**U-WAVE-TMB** (buzzer type)	**U-WAVE-TCB** (IP67 type)	**U-WAVE-TCB** (buzzer type)
Order No.	**264-626**	**264-627**	**264-624**	**264-625**
Protection level	IP67	N/A	IP67	N/A
Data reception indication	LED	LED, buzzer	LED	LED, buzzer
Power source	Lithium battery CR2032×1			
Battery life	Windows OS: Approx. 3 months, iOS/Android: Approx. 1 year			
Mass (g)	18			

Choose a connecting unit compatible with your gage.

Order No.	**02AZF310**	**02AZF300**
Protection level	IP67	N/A
Mass (g)	6	
Connectable transmission unit	**U-WAVE-TMB**/**TCB** (IP67)	**U-WAVE-TCB** (for standard type)

Note: Water-proof performance is ensured only when attached to measuring instruments of IP67 type.

Compatibility of Measuring Tool and Unit

Digimatic gage		Assembled appearance (Front/Back)	Connecting unit	Transmission unit
Micrometer	Standard		02AZF310	**264-627** **U-WAVE-TMB** (buzzer type)
	Quantu-Mike[1]		02AZF960	**264-626** **U-WAVE-TMB** (IP67 type)
Caliper	Standard	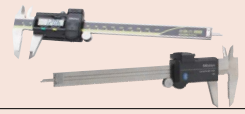	02AZF300	**264-625** **U-WAVE-TCB** (buzzer type)
	Coolant-proof type		02AZF310	**264-624** **U-WAVE-TCB** (IP67 type)
Digimatic indicator	**ID-C**, **ID-F** Series (new type only)	Type SF connector (for **ID-C** Series 12.7 mm type)	02AZF700	**264-627** **U-WAVE-TMB** (buzzer type) **264-626** **U-WAVE-TMB** (IP67 type)
	Others		Connection cable Mounting bracket	**02AZD880G** **U-WAVE-T** (buzzer type) U-WAVE **02AZD730G** **U-WAVE-T** (dust/water-proof type) U-WAVE

[1] **02AZF960** is applicable to new models (**293-14X-40**/**293-18X-40**).

Mitutoyo

USB Input Tool Direct Cable

USB Data Collection Cable

Digimatic Gage/PC Data Input Device
USB Input Tool Direct USB-ITN

A

- Converts measurement data to keyboard signals and directly inputs them to spreadsheet software such as Excel and Notepad.
- When using with optional software (refer to page A-11), you can easily create Microsoft Excel worksheets, enabling further improvement of work efficiency.

USB-ITN System Configuration

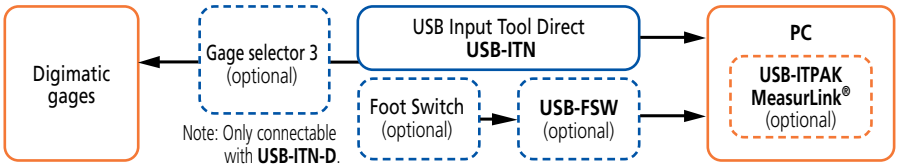

Data loading methods

- Data switch on the input tool (Type A/B/C/SF only)
- Data switch on the measuring gage
- Command transmission from a PC*

* Only available when using MeasurLink®, **USB-ITPAK V3.0**

1) Icon operation
2) Function key operation
3) Foot switch operation

One of the above operations

USB Input Tool Direct USB-ITN

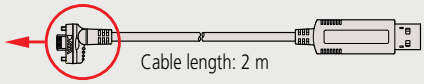

Connector is plugged into a USB port on a PC

Type	Order No.	Data switch
A	06AFM380A	✓
B	06AFM380B	✓
C	06AFM380C	✓
D	06AFM380D	–
E	06AFM380E	–
F	06AFM380F	–
G	06AFM380G	–
SA	06AGQ001A	✓
SF	06AGQ001F	–

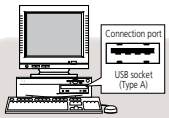

System Environment
- Hardware: PC with USB socket (Type A)
- Supporting OS (**USB-ITPAK V3.0**): Windows 10 64 bit
- Software: Programs supporting keyboard input (Excel, Word, memo pad, etc.)

Foot Switch (optional)
937179T

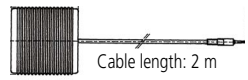

Option for USB-ITN
USB Foot Switch Adapter USB-FSW
06ADV384

Measurement Data Collection Software USB-ITPAK V3.0

(Refer to page A-11 for details)

Note 1: When using a foot switch in combination with **USB-ITN**, the optional **USB-FSW** and **USB-ITPAK V3.0/MeasurLink®** are required.
Note 2: When the measuring gage and **USB-ITN** have no data pushbuttons, the optional **USB-ITPAK V3.0/MeasurLink®** is required.
Note 3: Refer to Pages A-28 through A-30 for connector tool type.

Input data to the PC with the push of a button

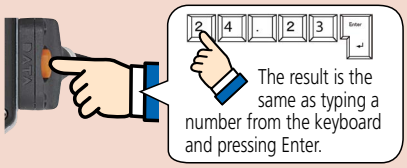

Just press the data button to send the displayed value to the PC.

Can be connected directly to a USB port on a PC with 1 cable

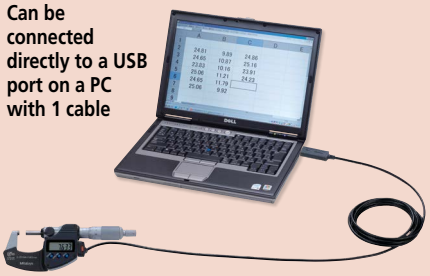

USB Input Tool Direct USB-ITN-B

Because the input tool is automatically recognized as an HID* keyboard device (a standard Windows driver) just by connecting it to a USB port, no special software is required.

* HID (Human Interface Device)

Main Specification

- Output compatibility: USB2.0 or USB1.0
- Supporting driver software: Switchable between 2 items below
  1) When using standalone: HID keyboard device*
  2) When using with **USB-ITPAK V3.0/MeasurLink®**: Virtual COM port (VCP)
- Communication speed: 12 Mbps (Full Speed)
- Power source: USB bus power
- USB2.0 certificate
- Conforms to EU EMC Directive

* Since this device is compatible with Windows standard driver software, dedicated driver software is not required.
Note: Information regarding **USB-ITPAK V3.0** can be downloaded from our website.

Got Questions?

USB and RS-232 Input Tool

Single Gage Data Collection Device

A

Measurement Data Input Tool
Input Tool SERIES IT-020U/IT-007R

- **264-020** (**IT-020U**) is an easy-to-use, expandable USB input tool with a large data switch and a foot switch connector. **264-007** (**IT-007R**) is an RS-232C communication-type input tool that can be controlled by data request commands from a PC.
- It can be connected to various types of measuring instruments using required SPC cables.(refer to pages A-29 to A-30)
- When using with optional software (refer to page A-11), you can easily create Microsoft Excel worksheets, enabling further improvement of work efficiency.

264-020

264-007

264-020/264-007 System Configuration

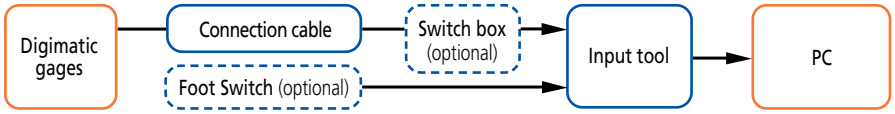

Connect the Digimatic connector to the gage

Connection cable

Refer to pages A-29 to A-30 for details.

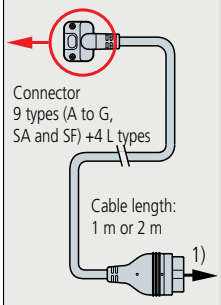

USB Keyboard Signal Conversion Model
Model: IT-020U
264-020

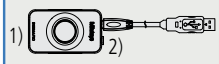

Connect the unit to a USB port of the PC

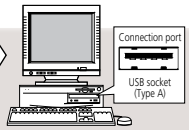

System Environment
- Hardware:
  PC with USB socket (Type A)
- Supporting OS (**USB-ITPAK V3.0**):
  Windows 10 64 bit
- Software:
  Programs supporting keyboard input (Excel, Word, memo pad, etc.)
  USB-ITPAK V3.0 (optional)

Note: Information regarding **USB-ITPAK V3.0** can be downloaded from our website.

Foot switch (optional)
937179T

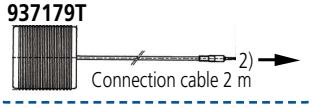

Gage selector 3 (optional)
939039

This selector can connect up to 3 measuring gages and switching is available with the slide switches without changing connection cables.
Connection cable (length: 1 m) between two input tools is a standard accessory (**936937**).

RS-232C Communication Conversion Type
Model: IT-007R
264-007

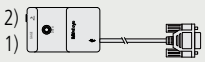

Data output is available by transmitting data request commands from the PC.

Connect the unit to a serial port of the PC

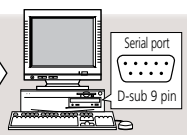

System Environment
- Hardware:
  PC or sequencer with a serial port (D-sub 9 pin)
- Software:
  A program compatible with the RS-232C communication (such as a hyper terminal) is required.

Main Specifications of 264-020

Output specification: USB2.0 or USB1.0
Supported driver software: Changeable between two types
1) Stand-alone: HID keyboard device*
2) Using **USB-ITPAK V3.0/MeasurLink®**: Virtual COM port (VCP)
Communication speed: 12 Mbps (Full Speed)
Power source: USB bus power
USB2.0 certificate
Conforms to EMC Directive
* This product is compatible with the standard driver software for Windows. No dedicated driver software is required.

The Input Tool, an HID* keyboard device (standard driver software for Windows) is **automatically recognized** when connected to a USB port.

* HID (Human Interface Device)

Specifications of IT-007R RS-232C Communication

- **Output specification: RS-232C compliant**

Communication method: Full duplex
Communication speed: 2400 bps (fixed)
Bit configuration: Start bit 1
Data length 8
(Most significant bit, 0 (fixed))
Parity, None
Stop bit 1
Flow control: None
Home position: DCE (modem definition)

- **Data format**

1) When data output

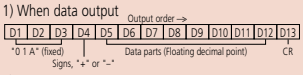

2) Error code output

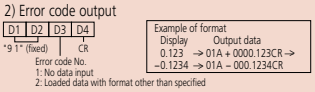

- **Data request signal**

Data can be output by transmitting a character from the PC.

- **Connector specification and power supply from the PC**

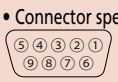

This product operates while accumulating the power supplied from the PC. A second or more input interval is required.

Pin No.	Symbol	in/out	Description of functions
1	(N.C.)	—	No connection
2	RXD	OUT	Data output from this product to the PC
3	TXD	IN	Data input from the PC to this product
4	DTR	IN	+12 V power supply from the PC*
5	GND	—	Ground
6	DSR	OUT	Not used
7	RTS	IN	+12 V power supply from the PC*
8	CTS	OUT	Not used
9	(N.C.)	—	No connection

* When connecting to a sequencer, a power supply is required.
Input voltage: Supplied in the range 6 V to 16 V
Power supply terminal: Supplied to pins 4 and 7
Note: "4" and "6", "7" and "8" are connected with each other inside this product.

Mitutoyo

Multiplexers

Multi-Gage Interface Unit

A

USB Multiplexers

- The ability to transfer data from the gage into any software such as Excel or MeasurLink®
- Simplifying multi-gage inspection stations to a single USB connection reduces the number of connections required to the PC
- Supports keyboard emulation (HID), Virtual COM Port (VCP) and RS232 connections
- MAX, MIN and TIR collection modes for a single gage or across all connected gages
- Data input from Digimatic, d2, and RS-232 devices
- Timed and continuous data streaming
- Map ports to specified spreadsheet columns or rows for organized data collection
- Date and timestamp for spreadsheets

SPECIFICATIONS

		MIG Input				MIG Output		Power	
Model No.	**Order No.**	# of Inputs	10-pin Digimatic	Serial RS232	Pass-Thru Port	USB	RS232	Power Supply	Supplies Power**
MIG-1USB	**64AAB637**	1	Y	-	-	HID/VCP	-	from USB port	-
MIG-2USB	**64AAB638**	2	Y	RS232 DB9M	Y	HID/VCP	RS232 DB9F	Power Adapter	Y
MIG-4USB	**64AAB639**	4	Y	RS232 DB9M	Y	HID/VCP	RS232 DB9F	Power Adapter	Y
MIG-8USB	**64AAB640**	8	Y	RS232 DB9M	Y	HID/VCP	RS232 DB9F	Power Adapter	Y

All MIG units include USB cable, RS-232C cable*, AC adapter*, and USB flash drive with additional drivers.
* MIG-1USB does not include RS-232C cable or AC adapter. Power is supplied by USB.
**MIG interfaces can have a feature where power can be supplied to gages or converter cables that can accept it, such as: 64PMT114, LGS Linear Gages, etc.

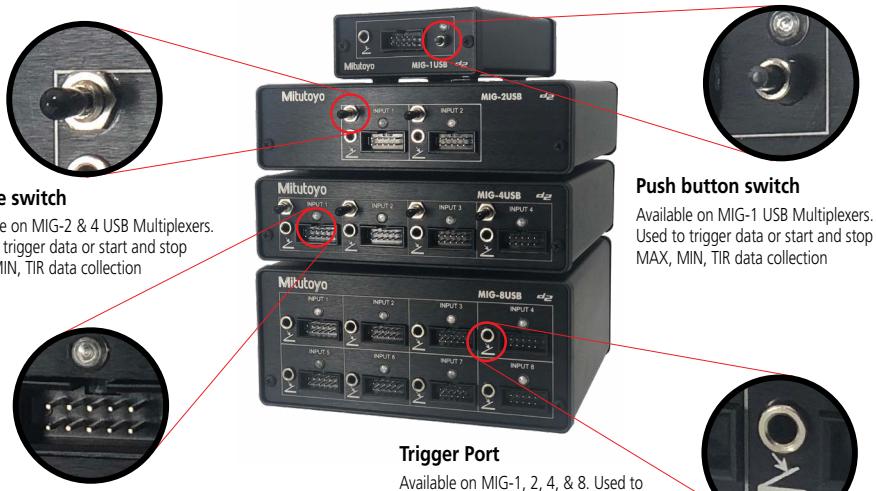

Toggle switch
Available on MIG-2 & 4 USB Multiplexers. Used to trigger data or start and stop MAX, MIN, TIR data collection

Push button switch
Available on MIG-1 USB Multiplexers. Used to trigger data or start and stop MAX, MIN, TIR data collection

10-pin Digimatic port and LED indicator
Available on MIG-1, 2, 4, & 8. LED verifies data input and MAX, MIN & TIR data collection 10-pin port accepts data from any Mitutoyo Digimatic tool with an SPC cable

Trigger Port
Available on MIG-1, 2, 4, & 8. Used to trigger data or start and stop MAX, MIN, TIR data collection with an external trigger. Can be used to trigger all data ports

Rear View

MIG-1USB

MIG-4USB

MIG-2USB

MIG-8USB

Technical Data

Data output: Via RS-232C interface / USB

Default Configuration

Data length: 8 bits
Start bit: 1 bit
Stop bit: 1 bit
Parity check: None
Baud rate: 9600

Standard Accessory

06AEG302JA: AC Adapter
RS232C: Cable (1.5m / 5ft)
USB Cable

Optional Accessories

937179T: Footswitch
12AAJ088: Footswitch – impact-resistant
64AAB644: Push button switch

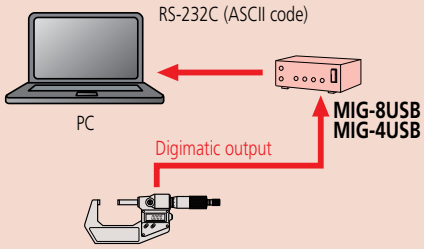

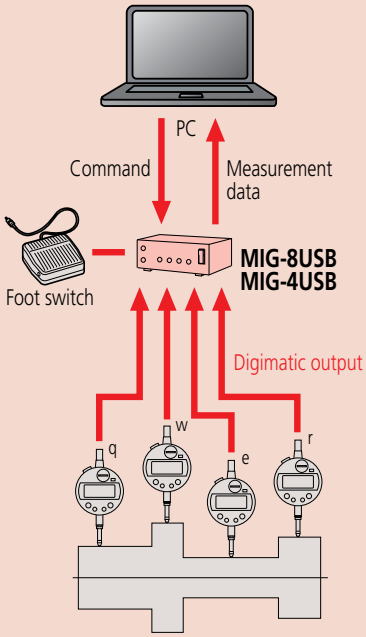

USB connection allows collected data to be easily transferred from the DP-1VA to the PC. The output is HID or VCP so data can be sent directly to Excel or data collection software such as IT-Pak or MeasurLink®.

Digimatic 2 function allows the high resolution of the gage to be output in its entirety in metric or inch.

DP-1VA Data Collection

- A gage with SPC output is connected to the DP-1VA with an SPC cable.
- The data for each part measured is printed or sent directly to a PC through a USB cable.
- This data can be triggered by the button on the gage, cable or the DP-1VA. An optional footswitch can also be used.

Data Logger:

– Data can be stored internally, printed and/or sent to a PC as it is measured or after all data has been collected.
– Up to 1,000 measurements can be stored.

Timer:

– Data collection can be triggered by a timer function. The DP-1VA can collect data unattended to measure changes over time.

Tolerance and SPC:

– Tolerances can be set in the unit and statistics can be calculated and printed directly from the DP-1VA.
– No additional software is required.

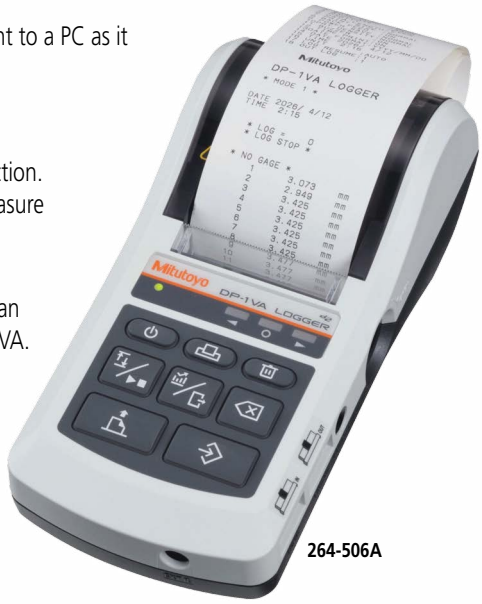

264-506A

SPECIFICATIONS

Order No.	264-506A
Data input	Digimatic, Digimatic 2, RS-232C input (for KA Counter Only)
Printing method	Thermal line printer
Character specifications	Total dot number: 384 dots/line
	Dot size: 8 dots/mm
	Normal font: 24 x 16 dots
	Large font: 36 x 24 dots
Print speed	0.8 s/line when using AC adapter
Print capacity	7,000 lines/roll with Large font
	10,000 lines/roll with Normal font
Print data	Measuring data, Go/±No-go, number of data, maximum minimum value, range, average, standard deviation, number of defective, function defective, process capability index, histogram, D-chart, control chart generation for X-bar and central limit data, data and time
Printer paper	High durability thermal paper. (one roll included)
	Width: 58mm. Roll length: 48m
Power supply	100 V 50/60 Hz AC adapter (6 V, 2 A)
	AA alkaline batteries x4 (not included)
Battery life	About 10,000 lines at 20 C
Data processing capability	Mode 0: 100,000 data entries
	Mode 1, 2: 9,999 data entries
	Mode 3: sample size 10 x subgroup 9,999 = Total number of data entries: 99,990
Tolerance judgement	5 sets
Logging of measurement data	Max 1,000 points
Timer input	0.25 s, 1 s, 5 s, 30 s, 1 min, 30 min, 60 min
Data output	USB output
	RS-232C output at TTL level
	Tolerance judgment result output (-NG, GO, +NG)
Clock precision	+/-2 min max/month
Internal battery life	10 years
Operating temperature range	0 C to 45 C with AC adapter
	10 C to 45 C with batteries
External Dimensions	94mm x 201mm x 75mm

Standard Accessory

06AEG302JA: AC Adapter

Optional Accessories

09EAA084*: RS-232C changing cable (1m, 9pin)
965516*: GO/±NG judgment cable
937179T: Footswitch
12AAJ088: Footswitch – impact-resistant
64AAB644: Push button switch
09EAA082: Paper (10 rolls)

*It is impossible to use the both RS-232C cable and GO/±NG judgment cable at the same time.

■ USB cable (A-microB) (optional)
06AFZ050

■ Foot switch (optional)
937179T

■ Push button switch
64AAB644

Gage Selector 3

3-channel Switching Box for Data Transmission

- Three Digimatic gages can be connected.
- You can specify the gage which outputs the data with the channel switch.

939039

SPECIFICATIONS

Order No.	Description
939039:	Gage Selector 3

Examples of Connections

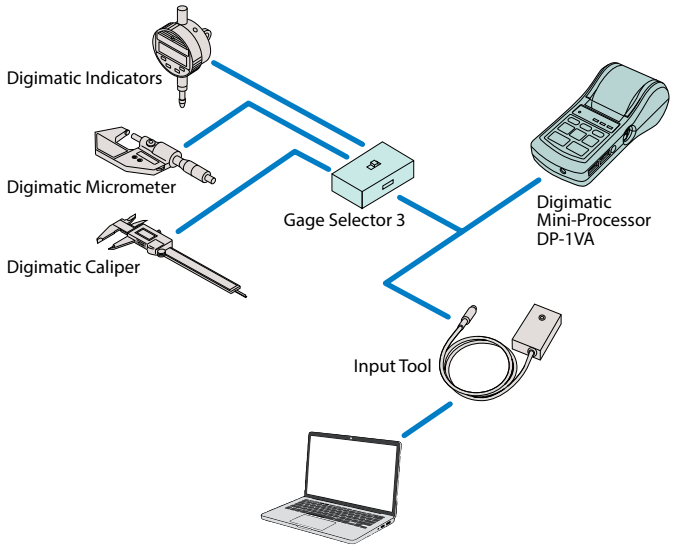

Technical Data

Connection: Up to three gages
Signal: Digimatic code format
Connection: Bidirectional
External dimensions (W x D x H): 100 x 70 x 33mm

EC Counter
SERIES 542 — Assembly-type Display Unit

- Compact panel mounting type and DIN size. It can be easily incorporated into each system.

542-007A

SPECIFICATIONS

Order No.	Description
542-007A	EC Counter

DIMENSIONS

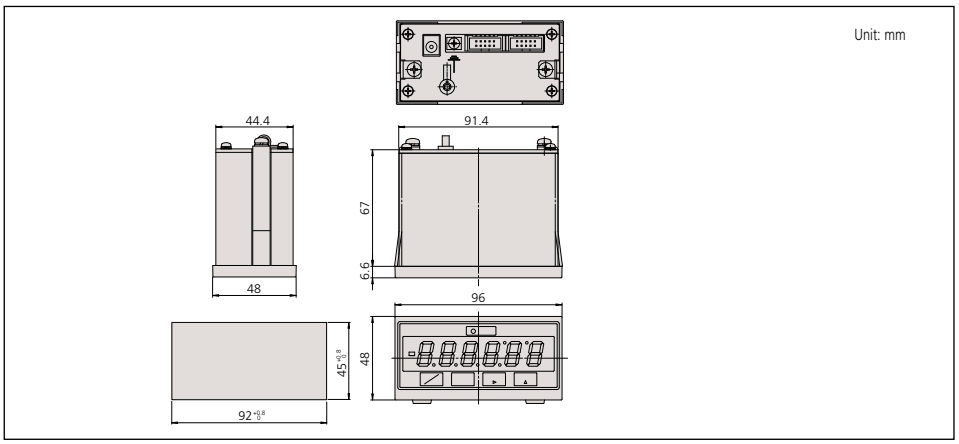

Technical Data

Applicable gage: LGD, LGS, All SPC output gages
Resolution: .00005"/.0001"/0.001mm,
.0005"/.001"/0.01mm
No. of gage input: 1
Display: 6-digit LED and a negative [-] sign
Function: Preset
Go/No-go judgment
Output (open-collector): 3-step limit signal, normal signal
External control: Preset, data hold
Power supply: Via AC adaptor
Dimensions (W x D x H): 96 x 48 x 84.6mm
Mass: 50g

Standard Accessory

06AEG302JA: AC Adapter

SPC Connecting Cables

Digimatic data cable specifications (Dimensions)

Extension Adapter - 02ADF640

Gage Connector Dimensions

Unit: mm

A) 1) **06AFM380A** 2) **05CZA624** (1 m) **05CZA625** (2 m) 3) **02AZD790A** (Standard) **02AZE140A** (FSW)

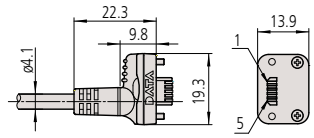

B) 1) **06AFM380B** 2) **05CZA662** (1 m) **05CZA663** (2 m) 3) **02AZD790B** (Standard) **02AZE140B** (FSW)

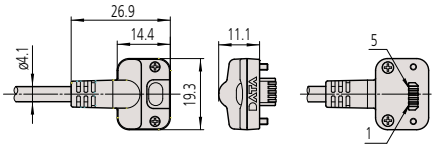

C) 1) **06AFM380C** 2) **959149** (1 m) **959150** (2 m) 3) **02AZD790C** (Standard) **02AZE140C** (FSW)

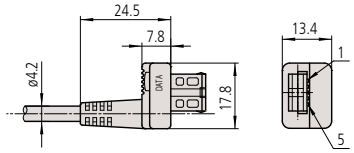

CR) 1) No applicable models 2) **04AZB512** (1 m) **04AZB513** (2 m) 3) No applicable models

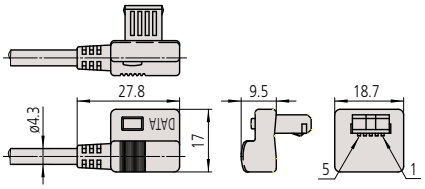

D) 1) **06AFM380D** 2) **936937** (1 m) **965014** (2 m) 3) **02AZD790D** (Standard) **02AZE140D** (FSW)

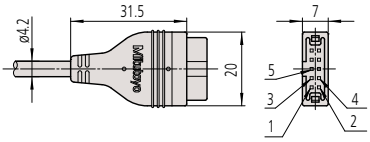

E) 1) **06AFM380E** 2) **937387** (1 m) **965013** (2 m) 3) **02AZD790E** (Standard) **02AZE140E** (FSW)

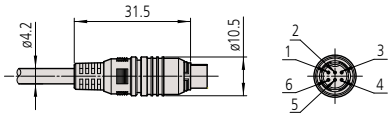

Note: (1), (2) and (3) are for connecting cables listed in A-29.

F) 1) **06AFM380F** 2) **905338** (1 m) **905409** (2 m) 3) **02AZD790F** (Standard) **02AZE140F** (FSW)

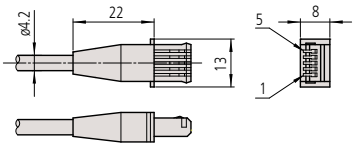

FB) 1) No applicable models 2) **905689** (1 m) **905690** (2 m) 3) No applicable models

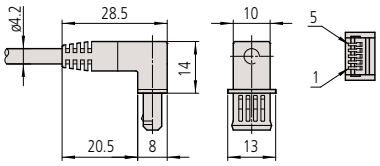

FR) 1) No applicable models 2) **905691** (1 m) **905692** (2 m) 3) No applicable models

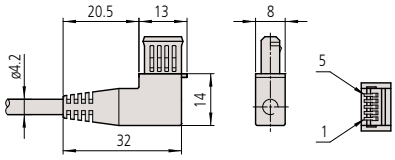

FL) and FR) is symmetrical and the same size.

G) 1) **06AFM380G** 2) **21EAA194** (1 m) **21EAA190** (2 m) 3) **02AZD790G** (Standard) **02AZE140G** (FSW)

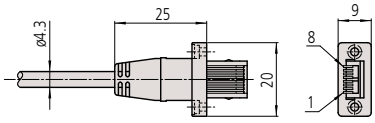

SA) 1) **06AGQ001A** 2) **06AGL111** (1 m) **06AGL121** (2 m) 3) No applicable models

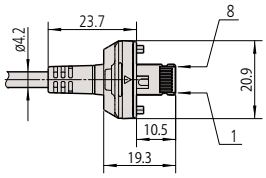

SF) 1) **06AGQ001F** 2) **06AGL011** (1 m) **06AGL021** (2 m) 3) **02AZG011** (Standard) **02AZG021** (FSW)

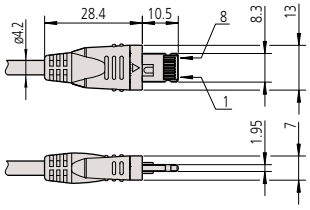

Talk to Sales

Mitutoyo

Cable Connection Guide

Connection Cables and Applicable Gage Models

A

1) USB Input Tool Direct USB-ITN	Connector type	A) Water-proof type with output button	B) Water-proof type with output button	C) Straight type with output button	CR) L-shape type with output button, cable outlet on right	D) Flat 10-pin type
	Model **Order No.**	**USB-ITN-A 06AFM380A**	**USB-ITN-B 06AFM380B**	**USB-ITN-C 06AFM380C**	No applicable models **USB-ITN-C** can be used. See figure below	**USB-ITN-D 06AFM380D**

2) 264-020/264-007/DP-1VA LOGGER/ MIG/EC Counter Connector (A to G, SA and SF) Type D on the other end for all models	Connector type		A) Water-proof type with output button	B) Water-proof type with output button	C) Straight type with output button	CR) L-shape type with output button, cable outlet on right	D) Flat 10-pin type
	Order No.	1 m	**05CZA624**	**05CZA662**	**959149**	**04AZB512**	**936937**
		2 m	**05CZA625**	**05CZA663**	**959150**	**04AZB513**	**965014**

3) U-WAVE-T	Connector type	A) Water-proof type with output button	B) Water-proof type with output button	C) Straight type with output button	CR) L-shape type with output button, cable outlet on right	D) Flat 10-pin type
	Standard	**02AZD790A**	**02AZD790B**	**02AZD790C**	No applicable models Type C can be used, but be careful of the cable when operating the thimble. (See figure below)	**02AZD790D**
	For foot switch	**02AZE140A**	**02AZE140B**	**02AZE140C**		**02AZE140D**

For connector types (circled in broken lines), select the model (A to G,SA,SF) that matches the connector shape of the Digimatic gage you are using.

Gage Connectors on Data Cable The connector dimensions are given on page A-28.	Connector type	A) Water-proof type with output button	B) Water-proof type with output button	C) Straight type with output button	CR) L-shape type with output button, cable outlet on right	D) Flat 10-pin type
	Cable connector shape on Digimatic gage side					
	Data switch	Available	Available	Available	Available	N/A

Digimatic Ports on Gage	Picture of Digimatic port		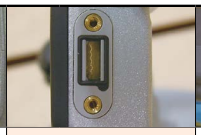			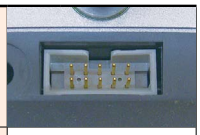
Please note that some high-precision Digimatic gages are capable of displaying the measurement result to more than 6 digits. However, according to the Digimatic output specification, the result may be output in 6 digits only. Digimatic gages whose display may exceed 6 digits • Laser Scan Micrometers • Litematic • Linear gage counter (**EH**)	Applicable models	• Digimatic caliper **500-776/500-777**, etc. **500-712-20/500-713-20**, etc. **500-712** etc. **550-301-10/550-331-10**, etc. **551-301-10/551-331-10**, etc. **552-302-10/552-303-10**, etc. **552-150-10/552-151-10**, etc. **552-155-10/552-156-10**, etc. **552-181-10/552-182-10**, etc. **573-601/573-602**, etc. • Digimatic depth gage **571-251-10/571-252-10**, etc. • Digimatic scale unit **572-600, 572-601**, etc.	• Digimatic micrometer **293-140-30/293-141-30**, etc. **293-230-30** etc. **340-251-30/340-252-30** **293-666-20/293-667-20**, etc. **227-201-20/227-203-20**, etc. **227-205-20/227-206-20**, etc. **227-221-20** etc. **227-223-20** etc. **422-230-30/422-231-30**, etc. **406-250-30/406-251-30**, etc. **343-250-30/343-251-30**, etc. **369-250-30/369-251-30**, etc. **345-250-30/345-251-30**, etc. **314-251-30/314-252-30**, etc. • Digimatic micrometer head **350-251-30/350-261-30**, etc. • Digimatic holtest **468-161/468-162**, etc. • Digimatic depth gage **329-250-30/329-251-30**, etc.	• Digimatic caliper **500-150-30/500-151-30**, etc. **500-500-10/500-501-10**, etc. **500-443** etc. **573-118-10/573-119-10**. etc. **573-116-10/573-117-10**, etc. **573-191-30/573-291-30** **573-181-30/573-182-30**, etc. • Digimatic depth gage **571-201-30/571-202-30**, etc. • Digimatic micrometer head **164-163/164-164** • Digimatic scale unit **572-203-10/572-213-10** **572-300-10/572-301-10**, etc.	• Digimatic micrometer **293-582/293-583**, etc. **389-514/389-714** 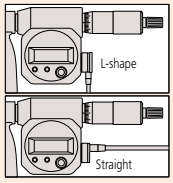 Type C straight connectors are available, but may interfere with thimble operation.	• Digimatic indicator **ID-H** **ID-F** (Note 1) • High-precision height gage **QMH-AX/BX** • Mu-checker Digital Mu Checker (Note 1) • Laser scan micrometer **LSM-9506** • Linear gage counter **EF/EH** (Note 2) **EB** (Note 1) and (Note 4), **EC-101D** (Note 1) • Litematic **VL-B/S-B** (Note 2) • Surface roughness measuring machine **SJ-210** (Note 4)/ **310/410** **SJ-500/SV-2100** (Note 3) • Hardness testing machines **HM-210/220** **HV-110/120** **HR-530** **HR-600**

Cable Connection Guide

Connection Cables and Applicable Gage Models

E) Round 6-pin type	F) Flat straight type	FB) Flat L-shape (cable outlet is back)	FR) Flat L-shape (cable outlet is right)	FL) Flat L-shape (cable outlet is left)	G) Flat straight water-proof type	SA) Water-proof straight model with output button	SF) Straight standard type
USB-ITN-E 06AFM380E	**USB-ITN-F 06AFM380F**	No applicable models **USB-ITN-F** is available.			**USB-ITN-G 06AFM380G**	**USB-ITN-SA 06AGQ001A**	**USB-ITN-SF 06AGQ001F**

E) Round 6-pin type	F) Flat straight type	FB) Flat L-shape (cable outlet is back)	FR) Flat L-shape (cable outlet is right)	FL) Flat L-shape (cable outlet is left)	G) Flat straight water-proof type	SA) Water-proof straight model with output button	SF) Straight standard type
937387	**905338**	**905689**	**905691**	**905693**	**21EAA194**	**06AGL111**	**06AGL011**
965013	**905409**	**905690**	**905692**	**905694**	**21EAA190**	**06AGL121**	**06AGL021**

E) Round 6-pin type	F) Flat straight type	FB) Flat L-shape (cable outlet is back)	FR) Flat L-shape (cable outlet is right)	FL) Flat L-shape (cable outlet is left)	G) Flat straight water-proof type	SA) Water-proof straight model with output button	SF) Straight standard type
02AZD790E	**02AZD790F**	No applicable models Use **02AZD790F** or **02AZE140F**			**02AZD790G**	No applicable models Use **02AZG011** or **02AZG021**	**02AZG011**
02AZE140E	**02AZE140F**				**02AZE140G**		**02AZG021**

Note 1: **USB-ITN** is required to use in the combination with **USB-ITPAK**, when connected to D) **ID-F**, D) digital Mu-checker, **EB**, **EC-101D**, and F) **ID-U**, **ID-SS**, **ID-SX**.
Note 2: **USB-ITN**, **USB Input Tool**, and **U-WAVE-T** cannot be used with D) **EF**/**EH** and D) **VL-B**/**S-B**.
Note 3: **USB-ITN** and **U-WAVE-T** cannot be used with D) **SJ-500**/**SV-2100**.
Note 4: **264-020** and **USB-ITN-SF** cannot be used with D) **SJ-210** and D) **EB**.

E) Round 6-pin type	F) Flat straight type	FB) Flat L-shape (cable outlet is back)	FR) Flat L-shape (cable outlet is right)	FL) Flat L-shape (cable outlet is left)	G) Flat straight water-proof type	SA) Water-proof straight model with output button	SF) Straight standard type
N/A	N/A	N/A	N/A	N/A	N/A	Available	N/A
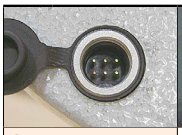		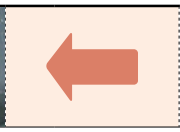	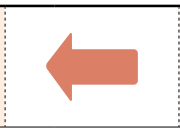	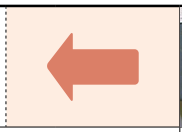			
[Hardness testing machines] **HM-102** **HM-103** **HM-320** **HM-430** **HM-411**	• Digimatic indicator **ID-CX**, **ID-C112AX**, **ID-C112RXB**, **ID-C112GXB**, **ID-U** (Note 1), **ID-SS** (Note 1), **ID-SX** (Note 1) **HDM-AX**, **HD-AX**, **HDS-HC**, **HDS-C** • ABS boremetic **568-361**/**568-362**, etc. • Digimatic bore gage **511-501**/**511-502**, etc. • Scale unit **SD-E**, **SDV-E**, **SD-F**, **SDV-F** • Hardness testing machines **HH-300** • Digimatic depth gage **Digimatic type (ID-CX)**				• Digimatic indicator **ID-N** **ID-B**	• Digimatic micrometer **QuantuMike** **(293-14X-40**/**293-18X-40)**	• Digimatic indicator **ID-CNX** **ID-FNX** • Digimatic depth gage **Digimatic type (ID-CNX)** • Digimatic thickness gage **Digimatic type (ID-CNX)** • Surface roughness measuring machine **SJ-220** • High-accuracy height gage **LH-600F**

[How to check the order No. of the connecting cable used for the measuring instrument]

• For models currently being sold
Please check the optional accessories for the applicable Digimatic gage in the general catalog.

• Regarding discontinued models not listed in the general catalog
Please contact Tech.Suppport@Mitutoyo.com

Mitutoyo

Quick Guide to Precision Measuring Instruments

Quality Control

A

Quality Control (QC)

A system used to ensure products and services are produced to meet the quality standards of the producer and the customer.

Process Quality Control

Activities to reduce variation in product quality and output by a process and maintain reductions. Process improvement and standardization are promoted through these activities.

Statistical Process Control (SPC)

Process quality control through statistical methods.

Population

The entire batch, lot, or product stream in a defined time frame. A sample of this population is used to estimate process parameters.

Lot

Collection of product produced under the same conditions.

Sample

An item (or items) of product taken out of the population to analyze and monitor the process.

Sample size

Number of items in the sample.

Bias

Value calculated by subtracting the true value from the mean of measurement values when multiple measurements are performed.

Variance / Precision

Variation in the measured values in relation to the mean for that characteristic. Standard deviation is usually used to represent the dispersion of values around the mean.

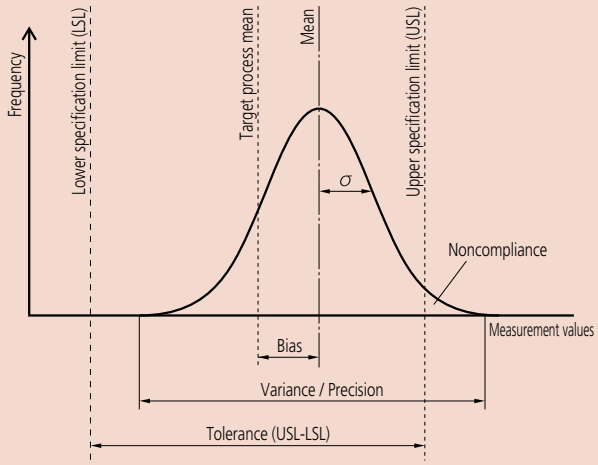

Histogram

A diagram that divides the range between the maximum and the minimum measurement values into several bins and shows the number of values (frequency) in each bin in the form of a bar graph. The histogram shows the spread, whether the center of the distribution is on target, and the shape of the data. A bell-curve-shaped distribution is ideal since it represents the normal distribution that is assumed in all statistical calculations.

Process Capability

The ability of a process to consistently produce output that meets specified requirements once any causes of variation are eliminated and the process is in a state of statistical control. Process capability compares the natural variation of the process to the allowed tolerance.

Process Capability Index (PCI or Cp)

The index value is calculated by dividing the tolerance of a target characteristic by the process capability (6 σ). The value calculated by dividing the difference between the mean ($\bar{X}$) and the standard value by 3 σ may be used to represent this index in cases of a unilateral tolerance. The process capability index assumes that a characteristic follows the normal distribution.

Note: If a characteristic follows the normal distribution, 99.74% data is within the range ±3 σ from the mean.

Bilateral tolerance

USL: Upper specification limit
LSL: Lower specification limit

Unilateral tolerance ... If only the upper limit is stipulated

$$Cp = \frac{USL-LSL}{6\sigma}$$

Unilateral tolerance ... If only the lower limit is stipulated

$$Cp = \frac{USL-\bar{X}}{3\sigma}$$

$$Cp = \frac{\bar{X}-LSL}{3\sigma}$$

Specific examples of a process capability index (Cp) (bilateral tolerance)

Cp=1

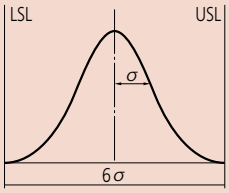

This process is barely capable. Process variation is exactly equal to the 6 sigma tolerance limits.

Cp=1.33

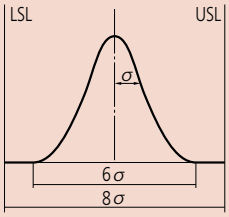

This process is generally considered capable of producing outputs that consistently meet tolerance limits. Process variation is 1 sigma less than tolerance limits.

Cp=1.67

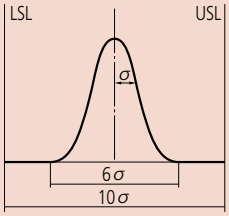

This process is easily capable of producing outputs that consistently meet tolerance limits. Process variation is 2 sigma less than tolerance limits.

Note that Cp only represents the relationship between the tolerance limits and the process variation and does not consider the position of the process mean.

Note: A process capability index that takes the difference between the process mean from the target process mean into consideration is generally called Cpk, which is the upper tolerance (USL minus the mean) divided by 3 σ (half of process capability) or the lower tolerance (the mean value minus LSL) divided by 3 σ, whichever is smaller.

Control Chart

Controls the process by separating process variation into chance cause variation and common cause variation. The control chart consists of one center line (CL) and the control limit lines statistically determined above and below it (UCL and LCL). It can be said that the process is in a state of statistical control if all points are within the upper and lower control limit lines without notable trends when the characteristic values that represent the process output are plotted. The control chart is a useful tool for controlling process output, and therefore quality.

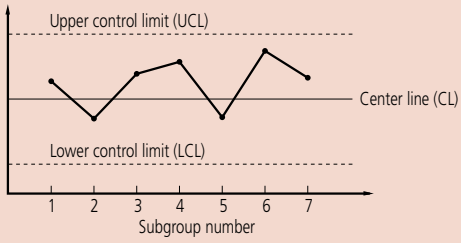

Common Cause Variation

Common cause of variation is of relatively low importance. Common cause variation is technologically or economically impossible to eliminate even if they can be identified.

$\bar{X}$-R control Chart

The process control that provides the most information on the process. The $\bar{X}$-R control chart consists of the $\bar{X}$ control chart that uses the mean of each subgroup for control to monitor abnormal bias of the process mean and the R control chart that uses the range for control to monitor abnormal variation. Usually, both charts are used together.

How to Read the Control Chart

Typical trends of successive point position in the control chart that are considered undesirable are shown below. These trends may indicate that a 'special cause' variation source is affecting the process output and that action from the process operator is required to remedy the situation. These rules only provide a guideline. Take the process-specific variation into consideration when actually making process adjustments. Assuming that the upper and the lower control limits are 3 σ away from the center line, divide the control chart into six regions at intervals of 1 σ to apply the following rules. These rules are applicable to the True, Xbar control chart. Note that these 'trend rules for action' were formulated assuming a normal distribution. Rules can be formulated to suit any other distribution.

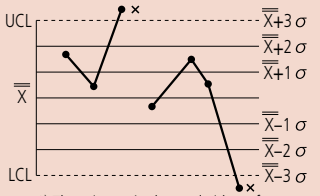

1) There is a point beyond either of the control limit lines (±3 σ).

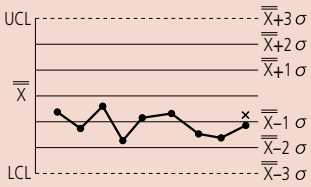

2) Nine consecutive points are to one side of the center line.

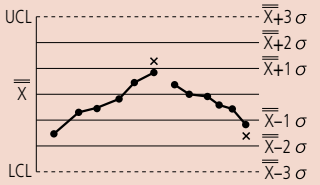

3) Six points consecutively increase or decrease.

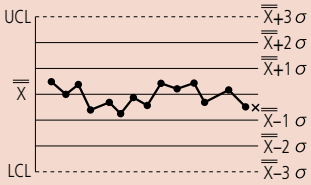

4) 14 points alternately increase and decrease.

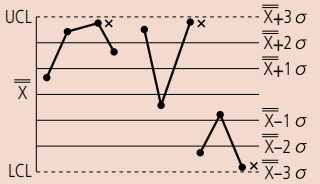

5) Two of three consecutive points are over ±2 σ from the center line on either side.

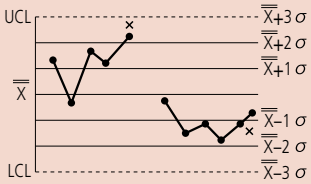

6) Four of five consecutive points are over ±1 σ from the center line on either side.

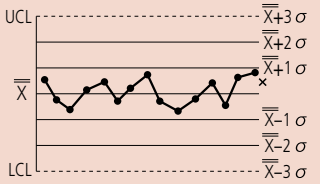

7) There are 15 consecutive points within ±1 σ from the center line.

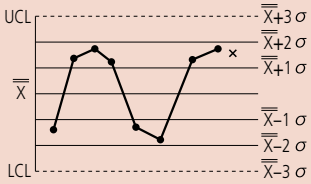

8) There are eight consecutive points over ±1 σ from the center line.

Note: This part of 'Quick Guide to Precision Measuring Instruments' (09-31 to 09-32) has been written by Mitutoyo based on its own interpretation of the JIS Quality Control Handbook published by the Japanese Standards Association.

References
- JIS Quality Control Handbook (Japanese Standards Association)

Z 8101: 1981
Z 8101-1: 1999
Z 8101-2: 1999
Z 9020: 1999
Z 9021: 1998

Mitutoyo

Featured Products

Ultra-high Accuracy Digimatic Micrometer
MDH Series
Refer to page B-3 for details.

High-speed and High-accuracy Digimatic Micrometer QuantuMike
MDE Series
Refer to page B-5 for details.

Coolant Proof Micrometers
MDC Series
Refer to page B-7 for details.

B

Micrometers

Measurement Data Network System

MeasurLink® is a measurement data management system based on databases (SQL Server). You can build a network to manage the measurement results and measuring instruments simply by combining the required functions.

MeasurLink® is a registered trademark of Mitutoyo Corporation in Japan and Mitutoyo America Corporation in the United States.

U-WAVE fit

Measurement Data Wireless Communication System

Bluetooth® communication enables wireless transfer of measurement data from Digimatic micrometers and callipers to PCs, smartphones, tablets and such other devices.

IP65

IP Codes

The code indicates the degree of protection against the ingress of foreign materials and water as defined in the IEC standard (IEC 60529). The number indicates the protection level.
(Refer to page 3)

TÜVRheinland CERTIFIED — Dust- and Water-Protected — www.tuv.com ID 0000040191

TÜV Rheinland Certification Marks

All products with the marks have passed the IP test carried out by the German accreditation organization, TÜV Rheinland.

Measuring Instruments Shipped with Inspection Certificate

Mitutoyo guarantees product quality as a leading precision measuring instrument manufacturer and ships measuring instruments with an inspection certificate that includes inspection data so that customers can use them with confidence.

ABSOLUTE™

ABSOLUTE Linear Encoder

Mitutoyo developed the unique ABSOLUTE method to retain position information after the power is turned off.
The origin is set once - thereafter the live position is displayed when the power is turned on.

DIGIMATIC S1

DIGIMATIC S1

Proprietary bidirectional serial communication protocol enables a connected PC to execute measurement data output, setting and control of a measuring instrument, and capture of information of a specific measuring instrument.

INDEX

Outside Micrometers (Digimatic)

Ultra-High Accuracy Digimatic Micrometer	B-3,4
High-Speed and High-accuracy Digimatic Micrometer QuantuMike	B-5,6
Coolant Proof Micrometers (IP65 Digimatic Micrometer)	B-7,8
Digimatic Outside Micrometers	B-9,10
Quickmike	B-11
ABSOLUTE Digimatic Micrometers	B-12
Outside Micrometers (Non-Rotating Spindle Type)	B-13
Outside Micrometers with Interchangeable Anvils	B-14,15

Outside Micrometers (Analog)

Outside Micrometers	B-16
Ratchet Thimble Micrometer	B-17
Outside Micrometers	B-18,19,20
Digit Outside Micrometers	B-21,22
Outside Micrometers with Interchangeable Anvils	B-23,24
Outside Micrometers with Anvil Extension Collars	B-25,26,27
Limit Micrometers	B-28

Special Purpose Micrometers

Caliper Type Micrometers	B-29,30
Screw Thread Micrometers	B-31
Screw Thread Micrometers (Interchangeable Anvil/Spindle Tip Type)	B-32,33
Disc Micrometers	B-34-39
Gear Tooth Micrometers (Interchangeable Ball Anvil/Spindle Tip Type)	B-41,42
Disk Micrometers (Non-Rotating Spindle Type)	B-38,39
Paper Thickness Micrometers	B-40
Gear Tooth Micrometers	B-41,42
Sheet Metal Micrometers	B-43,44,45
Tube Micrometers	B-46
Tube Micrometers (Spherical Anvil and Spindle Type)	B-47
Tube Micrometers (Spherical and Cylindrical Anvil Type)	B-48
Spline Micrometers	B-49,50
Point Micrometers	B-51,52
V-Anvil Micrometers	B-53,54
Blade Micrometers (Non-Rotating Spindle Type)	B-55,56,57
Can Seam Micrometers	B-58
Hub Micrometers	B-58
Crimp Height Micrometers	B-59,60
"Uni-Mike"	B-61
Indicator Type Micrometers	B-62
Indicating Micrometers	B-63,64
Dial Snap Meters	B-65
Snap Meters	B-66
Groove Micrometers	B-67
QUICKmini	B-68

Accessories, Options

Telescoping Gage Set	B-69
Optical Parallels	B-70
Optical Flats	B-70
Setting Standards for Outside Micrometers	B-71,72
Setting Standards for Screw Thread Micrometers	B-73
Setting Standards for V-Anvil Micrometers	B-73
3-Wire Units	B-74
Lubricant for Measuring Tools	B-75
Color-Coded Ratchet and Speeder Covers	B-75
Micrometer Stands	B-76
Tool Kits	B-77,78

Mitutoyo

Micrometers

Ultra-high Accuracy Digimatic Micrometer SERIES 293

- The flagship model, featuring unparalleled high accuracy and resolution.
- The accuracy of ±0.5 µm is achieved with our innovative 5 µinch / 0.1 µm resolution ABS (ABSOLUTE) rotary sensor and screw machining technology.
- A highly rigid frame and high-performance constant-force mechanism allow stable measurements.
- Body heat transferred to the instrument is reduced by a (removable) heat shield, minimizing the error caused by thermal expansion of the frame when performing handheld measurements.
- Measuring faces: Carbide tipped.

293-130-20

SPECIFICATIONS

	Inch/Metric	Metric
Order No.	**293-130-20**	**293-100-20**
Measuring range	0 – 1 in	0 – 25 mm
Resolution	0.000005 in/0.00002 in 0.0001 mm/0.0005 mm (switchable)	0.0001 mm/0.0005 mm (switchable)
Accuracy*	±0.00002 in	±0.5 µm
Flatness	0.000012 in	0.3 µm
Parallelism	0.000024 in	0.6 µm
Measuring surface	ø3.2 mm	
Measuring force	7 to 9 N	
Position detection method	Electromagnetic induction type ABS rotary sensor	
Mass	405 g (445 g with heat shield attached)	
Power source	Lithium battery (CR2032) ×1	
Battery life	Approx. two years when used under normal conditions	

* E_{MPE} (ISO 3611:2023 and ASME B89.1.13-2013)

MeasurLink ENABLED
Data Management Software by Mitutoyo

ABSOLUTE™

PROPRIETARY INSPECTION CERTIFICATE

Measurement Example

Recommended micrometer stand: **156-101-10**

Functions

Preset (ABS measurement system):
The measurement origin can be preset to any value within the display range for convenience in measuring.
Zero-setting (INC measurement system):
The display can be zeroed at any position of the spindle, making comparison measurement easier. Returning to the absolute-measurement mode is easily accomplished.
Hold:
The function that holds the display of value is useful when it is difficult to see the measured value at the measurement point. When the function is cancelled, the previous zero-set point or a measured value with reference to the origin is displayed.
Resolution switching:
The resolution of the display can be switched. If 0.1 µm measurement is not required, the resolution can be switched to 0.5 µm.
Function lock:
Functions such as preset or zero-set can be locked to avoid inadvertently changing the origin position.
On/off:
The power can be turned off after measurement is complete. Even after the power is turned off, the origin or last zero-set position remains in the memory.
Auto power off:
Even if the power is left on, the power turns off automatically if the micrometer is not used within a 20-minute period.
Measurement data output:
Measurement data can be output, allowing easy incorporation of this instrument into a statistical process control or measurement system.
Error alarm:
In the unlikely event of a display overflow or calculation error, an error message is displayed and measurement stops. Measurement cannot continue until the error is corrected.
Note: if the battery voltage drops below a certain point, the battery indicator will turn on before measurement becomes impossible, warning the user that the battery needs to be replaced.

Optional Output Devices

Order No.	Description
Wired	
264-020	USB Input tool (**IT-020U**)
- 05CZA662	Connecting Cable (**1m**)
- 05CZA663	Connecting Cable (**2m**)
06AFM380B	USB Input Tool Direct (**2m**)
Wireless	
264-622	Transmitter (**IP67**)
264-626	Transmitter (**IP67, Bluetooth**)
264-623	Transmitter (**Buzzer**)
264-627	Transmitter (**Buzzer, Bluetooth**)
- 02AZD790B	Connecting Cable
- 02AZE140B	Connecting Cable (**foot switch compatible**)

Note: Model uses connector type "B"

DIMENSIONS

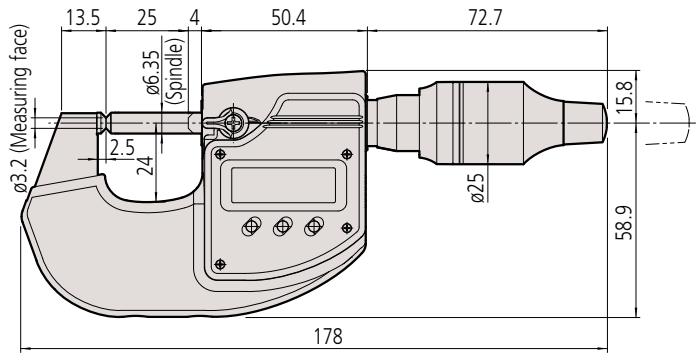

Standard Accessories

Heat shield (**04AAB969A**: **293-100-20**
04AAB969B: **293-130-20**) ×1
Spanner (**200877**) ×1
Screwdriver (**04AAB985**) ×1
Cleaning paper for measuring faces 20 sheets
Inspection certificate

Note: To install the heat shield, use the screws attached to the bottom of the micrometer frame.

Find a Distributor

Micrometers

High-Speed and High-accuracy Digimatic Micrometer QuantuMike
SERIES 293 — IP65 Micrometer with 2 mm/rev Spindle Feed

B

Features
- 4x faster spindle speed
- Preset, Zero, Hold, Function Lock, Error display
- 1-pc Rachet Thimble + Speeder
- Accuracy: ±.00005" / 0.001 µm

New Features
- Go/No-go icons: At-a-glance verification
- Calibration date alerts: Warning and due date alerts
- Approach Speed Warning: Reduce over-torquing
- Calculation: Auto-calculate corrections and more
- S1 Digimatic output: Send measurement to Excel or easily program features with software (ITPak 3.0 or MeasurLink®)
- Auto power On/Off. Key customization

293-180-40

SPECIFICATIONS

Inch / Metric

Order No.	Range (in)	Resolution	Measuring force (N)	Accuracy* (in)	Flatness (in)	Parallelism (in)	Mass (g)
293-180-40	0 - 1	0.00005 in/ 0.001 mm	7 to 12	±0.00005	0.000012	0.00004	265
293-181-40	1 - 2						325
293-182-40	2 - 3			±0.0001		0.00008	465
293-183-40	3 - 4						620

Metric

Order No.	Range (mm)	Resolution (mm)	Measuring force (N)	Accuracy* (µm)	Flatness (µm)	Parallelism (µm)	Mass (g)
293-140-40	0 - 25	0.001	7 to 12	±1	0.3	1	265
293-141-40	25 - 50						325
293-142-40	50 - 75			±2		2	465
293-143-40	75 - 100						620

- Power source: CR2032 battery (1 pc.), **64PTS301** included as standard

* E_{MPE} (ISO 3611:2023 and ASME B89.1.13-2013)

MeasurLink® ENABLED
Data Management Software by Mitutoyo

U-WAVE fit

IP65

TÜVRheinland CERTIFIED — Dust- and Water-Protected — www.tuv.com ID 1111264795

PROPRIETARY INSPECTION CERTIFICATE

DIGIMATIC S1

Measurement Example

Comparison of Time Needed to Measure a 6-Stepped Workpiece (With One Hand)

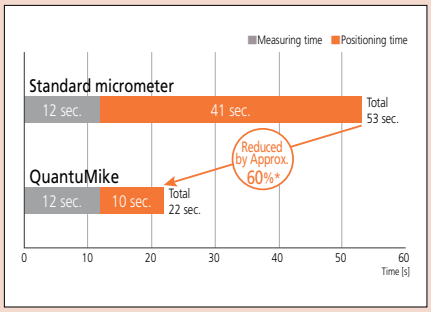

* According to Mitutoyo comparison test data for measuring time on typical workpieces.

Ratchet Thimble Mechanism

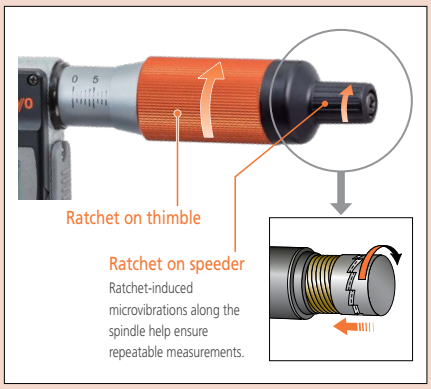

Got Questions?

Functions

Preset (ABS measurement system):
The measurement origin can be preset to any value within the display range for convenience in measuring.
Zero-setting (INC measurement system):
The display can be zeroed at any position of the spindle, making comparison measurement easier. Returning to the absolute-measurement mode is easily accomplished.
Hold:
The function that holds the display of value is useful when it is difficult to see the measured value at the measurement point. When the function is cancelled, the previous zero-set point or a measured value with reference to the origin is displayed.
Calibration alert:
This function gives an alert when the instrument is approaching its calibration date and again on the actual calibration due date, helping to ensure better measuring instrument management by preventing missed calibrations.
Approach speed warning:
Reduces variation in measurement values and improves reliability of measurements.
Tolerance judgment:
The function determines whether a measured value is within the range between the upper and lower tolerance limits and displays the result with a tolerance judgment mark.
Function lock:
Functions such as preset or zero-set can be locked to avoid inadvertently changing the origin position.
Auto power ON / OFF:
The reading on the LCD disappears after this instrument is idle for approx. 20 minutes, but the origin point is retained. Turning the spindle causes the reading on the LCD to reappear.
Key customization:
Frequently used functions can be assigned to buttons and called back easily, improving work efficiency.
Measurement data output:
Measurement data can be output, allowing easy incorporation of this instrument into a statistical process control or measurement system.
Error display:
In the unlikely event of a display overflow or calculation error, an error message is displayed and measurement stops. Measurement cannot continue until the error is corrected. Also, if the battery voltage drops below a certain point, the battery indicator will turn on before measurement becomes impossible, warning the user that the battery needs to be replaced.

Optional Output Devices

Order No.	Description
Wired	
264-020	USB Input tool (**IT-020U**)
- 06AGL111	Connecting Cable (**1m**)
- 06AGL121	Connecting Cable (**2m**)
06AGQ001A	USB Input Tool Direct (**2m**)
Wireless	
264-622	Transmitter (**IP67**)
264-626	Transmitter (**IP67, Bluetooth**)
264-623	Transmitter (**Buzzer**)
264-627	Transmitter (**Buzzer, Bluetooth**)
- 02AZF960	Connecting Unit (**Adapter**)

Note: Model uses connector type "SA"
For additional accessories refer to pages B-70 to B-76

New Digimatic S1 Output

S1 is the new Mitutoyo bidirectional output format that enables reading and writing information to the gages such as sending data, sending a zero command, calibration date warnings, and the ability to poll the serial number for smoother measurement operation. Communication supported by new Input Tools.

GO/NG icons

Displays tolerance judgment mark

Tolerance judgment function: ON

Auto-calculate

Calculates and displays correction value

Calculation function: ON

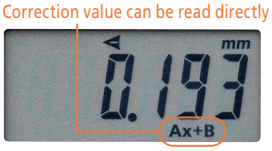

Customized key setting allows the user to easily switch between measurement values and calculation results with the press of a button.

Calibration alerts

Forewarning

Due date

DIMENSIONS

Unit: mm

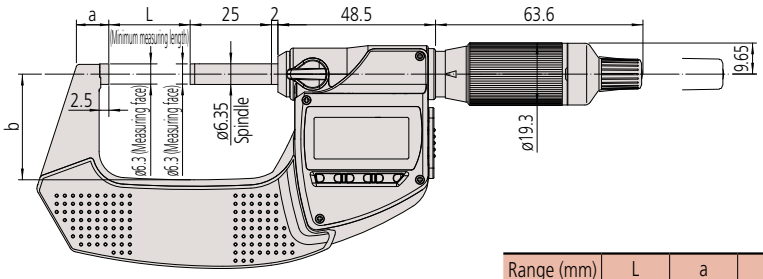

Range (mm)	L	a	b
0 - 25	0	9	25
25 - 50	25	9.8	32.5
50 - 75	50	12.6	47
75 - 100	75	14	60

Micrometers

Coolant Proof Micrometers
SERIES 293 — IP65 Digimatic Micrometer

- Accurate and highly environmentally resistant, assisting with many types of measurements.
- Ratchet thimble provides better operability for one-handed operation.
- Oil-resistant material used for all plastic parts.
- Models equipped with a Digimatic output port can form part of a statistical process control or networked measurement system.
- Measuring faces: Carbide tipped.

293-330-32

SPECIFICATIONS

Inch / Metric

Order No. Output	Order No. No output	Range (in)	Resolution	Accuracy* (in)	Parallelism (in)	Flatness (in)	Measuring force (N)	Remarks
—	**293-349-32**	0 - 1	0.0001 in /0.001 mm	±0.0001	0.00004	0.000012	7 - 12	Ratchet thimble
293-330-32	**293-340-32**		0.00005 in /0.001 mm	±0.00005			5 - 10	Ratchet stop
293-334-32	**293-344-32**						7 - 12	Ratchet thimble
293-335-32	**293-348-32**						5 - 10	Friction thimble
293-331-32	**293-341-32**	1 - 2					5 - 10	Ratchet thimble
293-336-32	—						7 - 12	Friction thimble
—	**293-345-32**						7 - 12	Ratchet thimble
293-332-32	**293-342-32**	2 - 3		±0.0001	0.00008		5 - 10	Ratchet stop
—	**293-346-32**						7 - 12	Ratchet thimble
293-333-30	**293-343-32**	3 - 4					5 - 10	Ratchet stop
—	**293-347-32**						7 - 12	Ratchet thimble

Metric

Order No. Output	Order No. No output	Range (mm)	Resolution (mm)	Accuracy* (µm)	Parallelism (µm)	Flatness (µm)	Measuring force (N)	Constant measuring force
293-230-30	**293-240-32**	0 - 25	0.001	±1	1	0.3	5 - 10	Ratchet stop
293-234-32	**293-244-30**						7 - 12	Ratchet thimble
293-231-30	**293-241-32**	25 - 50					5 - 10	Ratchet stop
293-235-32	**293-245-32**						7 - 12	Ratchet thimble
293-232-32	**293-242-32**	50 - 75		±2	2		5 - 10	Ratchet stop
293-236-30	**293-246-30**						7 - 12	Ratchet thimble
293-233-30	**293-243-32**	75 - 100					5 - 10	Ratchet stop
293-237-30	**293-247-30**						7 - 12	Ratchet thimble

- Power source: SR44 battery (1 pc.), **938882** included as standard

* E_{MPE} (ISO 3611:2023 and ASME B89.1.13-2013)

*1 **293-349-32** does not include an Inspection Certificate

DIMENSIONS

Ratchet stop

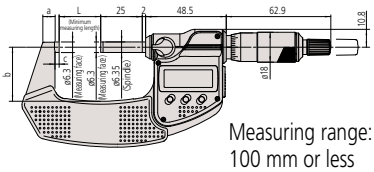

Measuring range: 100 mm or less

Ratchet thimble type

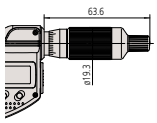

Unit: mm

Range (mm)	L	a	b	c
0 - 25	0	6.5	25	2.5
25 - 50	25	7.3	32.5	
50 - 75	50	10.1	47	
75 - 100	75	11.5	60	
0 - 25	0	6.5	25	
25 - 50	25	7.3	32.5	

MeasurLink ENABLED
Data Management Software by Mitutoyo

U-WAVE fit

IP65

Dust- and Water-Protected

TÜVRheinland CERTIFIED
www.tuv.com ID 1419032586

PROPRIETARY INSPECTION CERTIFICATE

Functions

Origin point setting (ABS measurement system):
Resets the ABS origin at the current spindle position to the minimum value of the measuring range and switches to ABS mode.

Zero-setting:
A brief press on the ZERO/ABS button sets display to zero at the current spindle position and switches to the incremental (INC) measuring mode. A longer press resets to the ABS measuring mode.

Hold:
The function that holds the display of value is useful when it is difficult to see the measured value at the measurement point. When the function is cancelled, the previous zero-set point or a measured value with reference to the origin is displayed.

Data output*:
Models equipped with this function have an output port for transferring measurement data to a Statistical Process Control (SPC) system.
* Only models with the data output function

Auto power ON / OFF:
The reading on the LCD disappears after this instrument is idle for about 20 minutes, but the reading and measurement mode are retained. Turning the spindle causes the reading to reappear.

Error alarm:
In case of an overflow on the LCD or a computing error, an error message appears on the LCD, and the measuring function stops. This prevents an instrument from giving an erroneous reading. Also, when the battery voltage drops to a certain level, the low-battery-voltage alarm indicator appears well before the micrometer becomes unusable.

Function lock:
This function allows the ORIGIN (origin point setting) function and the ZERO (zero-setting) function to be locked to prevent these points being reset accidentally.

Optional Accessories

For additional accessories refer to page B-8

Inch / Metric Micrometer Set .00005" / 0.001mm graduation model

Range	Order No.	Included in set
0 - 3" / 0 - 76.2mm (3 pcs. set)	**293-960-32**	293-330-32, 293-331-32, 293-332-32, 2 standard bars, plastic case
0 - 4" / 0 - 101.6mm (4 pcs. set)	**293-961-32**	293-330-32, 293-331-32, 293-332-32, 293-333-30, 3 standard bars, wooden box

Metric Micrometer Set

Range	Order No.	Included in set
0-50mm (2pcs. Set)	**293-966-30**	293-230-30, 293-231-30, 25mm CERA block, plastic case
0-75mm (3pcs. Set)	**293-962-32**	293-230-30, 293-231-30, 293-232-32, 2 standard bars, plastic case
0-100mm (4pcs. Set)	**293-963-32**	293-230-30, 293-231-30, 293-232-32, 293-233-30, 3 standard bars, wooden box

MeasurLink® ENABLED
Data Management Software by Mitutoyo

U-WAVE fit

IP65

Dust- and Water-Protected
TÜVRheinland CERTIFIED
www.tuv.com ID 1419032586

Functions

Refer to page B-7.

Optional Output Devices

Order No.	Description
Wired	
264-020	USB Input tool (**IT-020U**)
- 05CZA662	Connecting Cable (**1m**)
- 05CZA663	Connecting Cable (**2m**)
06AFM380B	USB Input Tool Direct (**2m**)
Wireless	
264-622	Transmitter (**IP67**)
264-626	Transmitter (**IP67, Bluetooth**)
264-623	Transmitter (**Buzzer**)
264-627	Transmitter (**Buzzer, Bluetooth**)
- 02AZF310	Connecting Unit (**Adapter**)
- 02AZE140B	Connecting Cable (**foot switch compatible**)

Note: Model uses connector type "B"
For additional accessories refer to pages B-70 to B-76

Rachet Stop (Ratchet speeder)

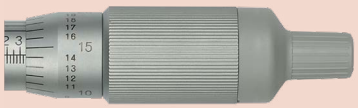

Rachet Thimble (1-piece thimble & speeder)

Friction Thimble (No ratcheting action)

Coolant Proof Micrometers
SERIES 293 — IP65 Digimatic Micrometer

- Accurate and highly environmentally resistant, assisting with many types of measurements.
- Oil-resistant material used for all plastic parts.
- Measuring faces: Carbide tipped.
- All models equipped with a Digimatic output port can form part of a statistical process control or networked measurement system.
- With SPC data output.

293-350-30

SPECIFICATIONS

Inch / Metric

Order No.	Range (in)	Resolution	Measuring force (N)	Accuracy* (in)	Parallelism (in)	Flatness (in)	Constant measuring force	Mass (g)
293-350-30	4 - 5	0.0001 in /0.001 mm	5 - 10	±0.0001	0.00012	0.000012	With ratchet stop	600
293-351-32	5 - 6							740
293-352-30	6 - 7			±0.00015				800
293-353-30	7 - 8				0.00016			970
293-354-30	8 - 9							1100
293-355-30	9 - 10			±0.0002				1270
293-356-30	10 - 11							1370
293-357-30	11 - 12				0.0002			1590

Metric

Order No.	Range (mm)	Resolution (mm)	Measuring force (N)	Accuracy* (µm)	Parallelism (µm)	Flatness (µm)	Constant measuring force	Mass (g)
293-250-30	100 - 125	0.001	5 - 10	±2	3	0.3	With ratchet stop	600
293-251-32	125 - 150							740
293-252-32	150 - 175			±3				800
293-253-30	175 - 200				4			970
293-254-32	200 - 225							1100
293-255-32	225 - 250			±4				1270
293-256-32	250 - 275							1370
293-257-32	275 - 300				5			1590

• Power source: SR44 battery (1 pc.), **938882** included as standard
Note: All digits of models over 125 mm (5 in) measuring range are presettable.
* E_{MPE} (ISO 3611:2023 and ASME B89.1.13-2013)

DIMENSIONS

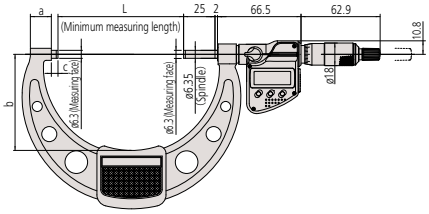

Ratchet stop type over 100 mm

Unit: mm

Range (mm)	L	a	b	c
100 - 125	100	16.7	76	5.3
125 - 150	125	18.8	90	5.7
150 - 175	150	19.1	103	6.1
175 - 200	175	18.2	115	6.3
200 - 225	200	16.8	126	6.7
225 - 250	225	18	139	5.5
250 - 275	250		152	6.5
275 - 300	275		166	

Mitutoyo

Micrometers

MeasurLink ENABLED
Data Management Software by Mitutoyo

B

Digimatic Outside Micrometers SERIES 293

- All models have a measurement data output function that is useful for measuring large workpieces. This function allows you to easily send data via an optional communication cable or wireless system and import it to spreadsheet software or use it in various applications.
- This large Digimatic micrometer series is available in various sizes up to 20" / 500mm. It features a ratchet stop for constant measuring force.
- Measuring faces: Carbide tipped.
- With SPC data output.

293-782

SPECIFICATIONS

Inch / Metric

Order No.	Range (in)	Resolution	Measuring force (N)	Accuracy* (in)	Flatness (in)	Parallelism (in)
293-782	12 - 13	0.0001 in /0.001 mm	10 - 15	±0.0003	0.000024	0.0002
293-783	13 - 14					
293-784	14 - 15					
293-785	15 - 16			±0.00035		0.00024
293-786	16 - 17					
293-787	17 - 18					
293-788	18 - 19			±0.0004		
293-789	19 - 20					0.00028

Metric

Order No.	Range (mm)	Resolution (mm)	Measuring force (N)	Accuracy* (µm)	Flatness (µm)	Parallelism (µm)
293-582	300 - 325	0.001	10 - 15	±6	0.6	5
293-583	325 - 350					
293-584	350 - 375					
293-585	375 - 400			±7		6
293-586	400 - 425					
293-587	425 - 450					
293-588	450 - 475			±8		
293-589	475 - 500					7

•Power source: SR44 battery (2 pcs.), **938882** included as standard
* *Empe* (ISO 3611:2023 and ASME B89.1.13-2013)

DIMENSIONS

Unit: mm

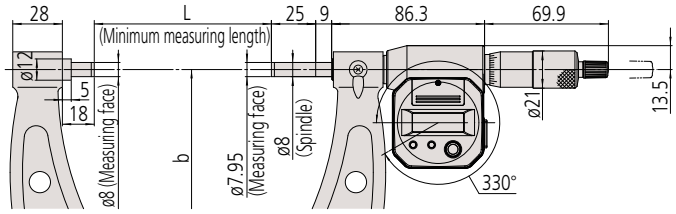

Range (mm)	L	b
300 - 325	300	187
325 - 350	325	199
350 - 375	350	212
375 - 400	375	224
400 - 425	400	236
425 - 450	425	248
450 - 475	450	261
475 - 500	475	273

Functions

Origin point setting (ABS measurement system):
Resets the ABS origin at the current spindle position to the minimum value of the measuring range and switches to ABS mode.
Zero-setting (INC measurement system):
A brief press on the ZERO/ABS button sets display to zero at the current spindle position and switches to the incremental (INC) measuring mode. A longer press resets to the ABS measuring mode.
Hold:
The function that holds the display of value is useful when it is difficult to see the measured value at the measurement point. When the function is cancelled, the previous zero-set point or a measured value with reference to the origin is displayed.
Function lock:
This function allows the PRESET (origin point setting) function and the ZERO (zero-setting) function to be locked to prevent these points being reset accidentally.
Auto power ON/OFF:
The reading on the LCD disappears after this instrument is idle for about 20 minutes, but the reading and measurement mode are retained. Turning the spindle causes the reading to reappear.
Data output:
Models equipped with this function have an output port for transferring measurement data to a Statistical Process Control (SPC) system.
Error alarm:
In case of an overflow on the LCD or a computing error, an error message appears on the LCD, and the measuring function stops. This prevents an instrument from giving an erroneous reading. Also, when the battery voltage drops to a certain level, the low-battery-voltage alarm indicator appears well before the micrometer becomes unusable.

Optional Output Devices

Order No.	Description
Wired	
264-020	USB Input tool (**IT-020U**)
- 959149	Connecting Cable (**1m**)
- 959150	Connecting Cable (**2m**)
- 04AZB512	Connecting Cable, L-Type (**1m**)
- 04AZB513	Connecting Cable, L-Type (**2m**)
06AFM380C	USB Input Tool Direct (**2m**)
Wireless	
264-622	Transmitter (**IP67**)
264-626	Transmitter (**IP67, Bluetooth**)
264-623	Transmitter (**Buzzer**)
264-627	Transmitter (**Buzzer, Bluetooth**)
- 02AZD790C	Connecting Cable
- 02AZE140C	Connecting Cable (**foot switch compatible**)

Note: Model uses connector type "C"
For additional accessories refer to pages B-70 to B-76

Digimatic Outside Micrometers
SERIES 293 — MDC-Lite

- Simple design with no data output for accuracy at a lower cost.
- Provided only with an origin-set button for easy origin setting, and an inch/mm conversion button for Inch type models.
- Equipped with Ratchet Stop or Friction Thimble for constant measuring force.
- Extended battery life of approximately 2.4 years, which helps reduce the number of battery replacements required.
- Measuring faces: Carbide tipped.
- Without SPC data output.

293-831-32

Functions

Zero-setting:
A brief press on the ORIGIN button sets display to zero at the current spindle position (zero-setting), which allows easy comparison measurement.

Auto power ON / OFF:
The reading on the LCD disappears after this instrument is idle for about 20 minutes, but the reading is retained. Turning the spindle causes the reading on the LCD to reappear.

Error display:
In case of an overflow on the LCD or a computing error, an error message appears on the LCD, and the measuring function stops. This prevents an instrument from giving an erroneous reading. Also, when the battery voltage drops to a certain level, the low-battery-voltage alarm indicator appears well before the micrometer becomes unusable.

Optional Accessories

For additional accessories refer to pages B-70 - B76

Rachet Stop (Ratchet speeder)

Friction Thimble (No ratcheting action)

SPECIFICATIONS

Inch / Metric With ratchet stop

Order No.	Range (in)	Resolution	Measuring force (N)	Accuracy* (in)	Flatness (in)	Parallelism (in)	Mass (g)
293-831-32	0 - 1	0.00005 in/0.001 mm	5 - 10	±0.0001	0.000012	0.00008	270

Inch / Metric With friction thimble

Order No.	Range (in)	Resolution	Measuring force (N)	Accuracy* (in)	Flatness (in)	Parallelism (in)	Mass (g)
293-832-32	0 - 1	0.00005 in/0.001 mm	5 - 10	±0.0001	0.000012	0.00008	270

Metric With ratchet stop

Order No.	Range (mm)	Resolution (mm)	Measuring force (N)	Accuracy* (µm)	Flatness (µm)	Parallelism (µm)	Mass (g)
293-821-30	0 - 25	0.001	5 - 10	±2	0.3	2	270

- Power source: SR44 battery (1 pc.), **938882** included as standard

* E_{MPE} (ISO 3611:2023 and ASME B89.1.13-2013)

DIMENSIONS

Unit: mm

Ratchet thimble type

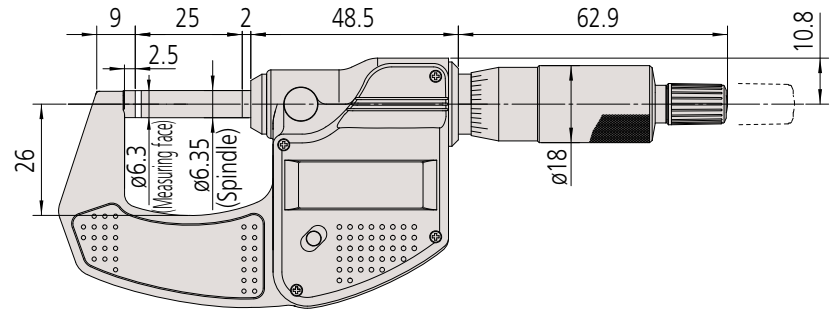

Need Repair?

Micrometers

Quickmike
SERIES 293 — IP65 ABSOLUTE Digimatic Micrometers

- The Quickmike provides a speedy spindle feed of 10 mm per thimble rotation which enables quick measurements of many different-sized features.
- Measuring faces: Carbide tipped.
- Equipped with Ratchet Stop style for constant measuring force.
- With SPC data output.

B

293-676-22

SPECIFICATIONS

Inch / Metric

Order No.	Range (in)	Resolution	Measuring force (N)	Accuracy* (in)	Flatness (in)	Parallelism (in)	Constant measuring force	Mass (g)
293-676-22	0 - 1.2	0.00005 in/ 0.001 mm	5 - 12	±0.0001	0.000012	0.00008	Yes	275
293-677-22	1 - 2.2							340
293-678-20	2 - 3.2			±0.00015				480
293-679-22	3 - 4.2					0.00012		585

Metric

Order No.	Range (mm)	Resolution (mm)	Measuring force (N)	Accuracy* (µm)	Flatness (µm)	Parallelism (µm)	Constant measuring force	Mass (g)
293-666-20	0 - 30	0.001	5 - 12	±2	0.3	2	Yes	275
293-667-20	25 - 55							340
293-668-20	50 - 80			±3				480
293-669-22	75 - 105					3		585

- Power source: SR44 battery (1 pc.), **938882** included as standard
- Standard accessories: Setting standard, 1 pc. (for models greater than 1.2 in (30mm))

* E_{MPE} (ISO 3611:2023 and ASME B89.1.13-2013)

DIMENSIONS

Unit: mm

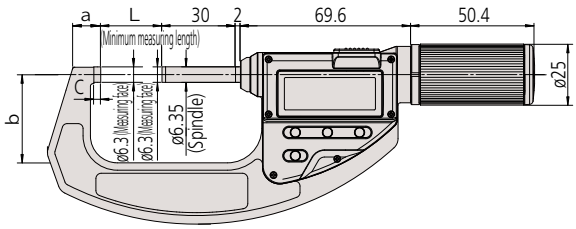

Range (mm)	L	a	b	c
0 - 30	0	9	25	2
25 - 55	25	11.3	36	2.5
50 - 80	50	13.1	47	
75 - 105	75	13.5	60	

MeasurLink ENABLED
Data Management Software by Mitutoyo

ABSOLUTE™

IP65

TÜVRheinland CERTIFIED
Dust- and Water-Protected
www.tuv.com ID 0000063013

Measurement Example

Optional Output Devices

Order No.	Description
Wired	
264-020	USB Input tool (**IT-020U**)
- 05CZA662	Connecting Cable (**1m**)
- 05CZA663	Connecting Cable (**2m**)
06AFM380B	USB Input Tool Direct (**2m**)
Wireless	
264-622	Transmitter (**IP67**)
264-626	Transmitter (**IP67, Bluetooth**)
264-623	Transmitter (**Buzzer**)
264-627	Transmitter (**Buzzer, Bluetooth**)
- 02AZD790B	Connecting Cable
- 02AZE140B	Connecting Cable (**foot switch compatible**)

Note: Model uses connector type "B"
For additional accessories refer to pages B-70 to B-76

Mechanism

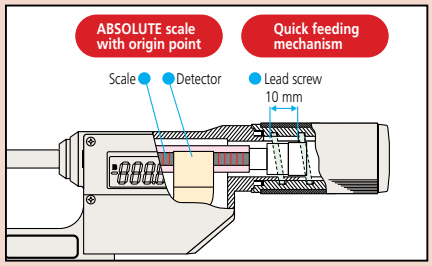

Where to Buy

ABSOLUTE Digimatic Micrometers
SERIES 227 — with Adjustable Measuring Force

- Digimatic micrometer equipped with a constant/low measuring force mechanism. The measurement-value hold function automatically retains the data at a specified measuring force. (Pressing with a larger force than the specified measuring force does not affect the measurement result.)
- Suitable for measuring flexible workpieces such as electric wire, paper, and rubber.
- Non-rotating spindle reduces workpiece deformation.
- Measuring faces: Carbide tipped.
- With SPC data output.

227-201-22

Measurement Example

Functions

Adjustable measuring force mechanism, Origin point setting, Zero setting, Hold, Function Lock, Auto power off, Measurement data output, Error display

Optional Output Devices

Order No.	Description
Wired	
264-020	USB Input tool (**IT-020U**)
- 05CZA662	Connecting Cable (**1m**)
- 05CZA663	Connecting Cable (**2m**)
06AFM380B	USB Input Tool Direct (**2m**)
Wireless	
264-622	Transmitter (**IP67**)
264-626	Transmitter (**IP67, Bluetooth**)
264-623	Transmitter (**Buzzer**)
264-627	Transmitter (**Buzzer, Bluetooth**)
- 02AZD790B	Connecting Cable
- 02AZE140B	Connecting Cable (**foot switch compatible**)

Note: Model uses connector type "B"
For additional accessories refer to pages B-70 to B-76

Adjustable Measuring Force

To preset the measuring force, adjust the measuring force setting scale on the thimble with the screwdriver supplied.

Constant Measuring Force Mechanism

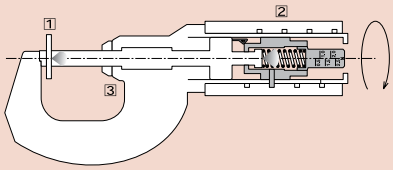

1 Measuring force is generated by the action of trapping a workpiece between the spindle face and the anvil.
2 The constant-force unit applies the specified measuring force.
3 When the preset measuring force is reached, the count on the LCD is automatically held and the hold symbol appears.
(To cancel the hold, reverse the thimble more than 1/10 revolution and press the hold button.)

SPECIFICATIONS

Inch / Metric

Order No.	Range (in)	Resolution	Accuracy* (in)	Flatness (in)	Parallelism (in)	Measuring force (N)	Accuracy of the selected measuring force*1 (N)	Repeatability of measuring force*1 (N)	Mass (g)
227-211-22	0 - 0.6	0.00005 in/ 0.001 mm	±0.0001	0.000012	0.00008	0.5, 1.0, 1.5, 2.0, 2.5	± (0.1+ the selected measuring force/10)	within 0.1	300
227-213-22	0.6 - 1.2								380
227-215-22	0 - 0.4					2, 4, 6, 8, 10	± (0.4+ the selected measuring force/10)	within 0.4	345
227-216-22	0.4 - 0.8								425
227-217-22	0.8 - 1.2								415

Metric

Order No.	Range (mm)	Resolution (mm)	Accuracy* (µm)	Flatness (µm)	Parallelism (µm)	Measuring force (N)	Accuracy of the selected measuring force*1 (N)	Repeatability of measuring force*1 (N)	Mass (g)
227-201-22	0 - 15	0.001	±2	0.3	2	0.5, 1.0, 1.5, 2.0, 2.5	± (0.1+ the selected measuring force/10)	within 0.1	300
227-203-20	15 - 30								380
227-205-22	0 - 10					2, 4, 6, 8, 10	± (0.4+ the selected measuring force/10)	within 0.4	345
227-206-22	10 - 20								425
227-207-22	20 - 30								415

- Measurement posture: horizontal orientation only (Recommended spindle inclination: within ±3°)
- Power source: SR44 battery (1 pc.), **938882** included as standard

* E_{MPE} (ISO 3611:2023 and ASME B89.1.13-2013)
*1 These values are guaranteed when micrometer is used in a horizontal orientation (within ±3 degrees)

DIMENSIONS

Unit: mm

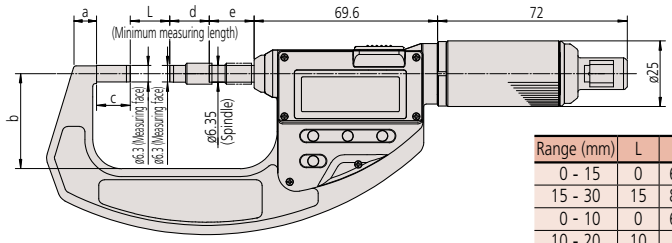

Range (mm)	L	a	b	c	d	e
0 - 15	0	6.2	25	2	15	17
15 - 30	15	8.5	36	12.8		
0 - 10	0	6.2	25	2	10	22
10 - 20	10	8.5	36	17.8		
20 - 30	20			7.8		

Micrometers

MeasurLink ENABLED
Data Management Software by Mitutoyo
U-WAVE fit

B

Outside Micrometers
SERIES 406 — Non-rotating Spindle Type

- Non-rotating spindle eliminates torque on workpiece. Therefore, it is suitable for measuring flexible workpieces such as rubber and paper or thin workpieces such as film.
- Measuring faces: Carbide tipped.
- Equipped with Ratchet Stop for constant measuring force.
- With SPC data output.

406-350-32

Measurement Example

SPECIFICATIONS

Inch / Metric

Order No.	Range (in)	Resolution	Accuracy* (in)	Flatness (in)	Parallelism (in)
406-350-32	0 - 1	0.00005 in / 0.001 mm	±0.00015	0.000012	0.00012
406-351-32	1 - 2				
406-352-32	2 - 3				
406-353-30	3 - 4		±0.0002		0.00016

Metric

Order No.	Range (mm)	Resolution (mm)	Accuracy* (μm)	Flatness (μm)	Parallelism (μm)
406-250-32	0 - 25	0.001	±3	0.3	3
406-251-30	25 - 50				
406-252-32	50 - 75				
406-253-30	75 - 100		±4		4

- Power source: SR44 battery (1 pc.), **938882** included as standard

* E_{MPE} (ISO 3611:2023 and ASME B89.1.13-2013)

Optional Output Devices

Order No.	Description
Wired	
264-020	USB Input tool (**IT-020U**)
- 05CZA662	Connecting Cable (**1m**)
- 05CZA663	Connecting Cable (**2m**)
06AFM380B	USB Input Tool Direct (**2m**)
Wireless	
264-622	Transmitter (**IP67**)
264-626	Transmitter (**IP67, Bluetooth**)
264-623	Transmitter (**Buzzer**)
264-627	Transmitter (**Buzzer, Bluetooth**)
- 02AZF310	Connecting Unit (**Adapter**)
- 02AZE140B	Connecting Cable (**foot switch compatible**)

Note: Model uses connector type "B"
For additional accessories refer to pages B-70 to B-76

DIMENSIONS

Digimatic models up to 75 mm measuring range

Unit: mm

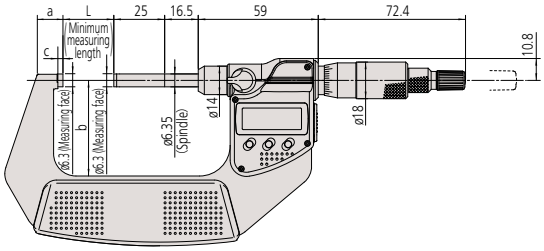

Digimatic models over 75 mm measuring range

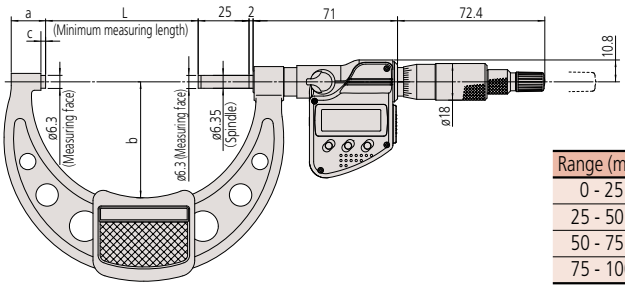

Range (mm)	L	a	b	c
0 - 25	0	9.8	32	2.5
25 - 50	25	12.6	47	
50 - 75	50	14	60	
75 - 100	75	16.9	57	2.8

Mitutoyo
Get a Quote

MeasurLink ENABLED
Data Management Software by Mitutoyo

U-WAVE fit

IP65

Dust- and Water-Protected
TÜVRheinland CERTIFIED
www.tuv.com ID 0000040191

Applicable models: 0-12" (0-300mm):
340-251-32, **340-252-32**, **340-351-32**, **340-352-32**

Technical Data

Accuracy: ±0.0002"+0.00005(L/3)", L = Max Range (Inch)
±4+(L/75)µm, L = Max Range (mm)

Measurement Example

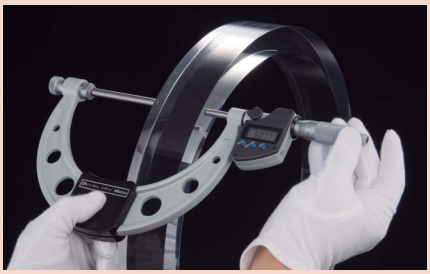

Optional Output Devices (0-12 in Models)

Order No.	Description
Wired	
264-020	USB Input tool (**IT-020U**)
- 05CZA662	Connecting Cable (**1m**)
- 05CZA663	Connecting Cable (**2m**)
06AFM380B	USB Input Tool Direct (**2m**)
Wireless	
264-622	Transmitter (**IP67**)
264-626	Transmitter (**IP67, Bluetooth**)
264-623	Transmitter (**Buzzer**)
264-627	Transmitter (**Buzzer, Bluetooth**)
- 02AZF310	Connecting Unit (**Adapter**)
- 02AZE140B	Connecting Cable (**foot switch compatible**)

Note: Model uses connector type "B"
For additional accessories refer to pages B-70 to B-76

Optional Output Devices (12-36 in Models)

Order No.	Description
Wired	
264-020	USB Input tool (**IT-020U**)
- 959149	Connecting Cable (**1m**)
- 959150	Connecting Cable (**2m**)
- 04AZB512	Connecting Cable, L-Type (**1m**)
- 04AZB513	Connecting Cable, L-Type (**2m**)
06AFM380C	USB Input Tool Direct (**2m**)
Wireless	
264-622	Transmitter (**IP67**)
264-626	Transmitter (**IP67, Bluetooth**)
264-623	Transmitter (**Buzzer**)
264-627	Transmitter (**Buzzer, Bluetooth**)
- 02AZD790C	Connecting Cable
- 02AZE140C	Connecting Cable (**foot switch compatible**)

Note: Model uses connector type "C"
For additional accessories refer to pages B-70 to B-76

Outside Micrometers
SERIES 340 — with Interchangeable Anvils

- Wide measuring range with interchangeable anvils.
- Measuring face of the spindle is carbide tipped (standard model).
- IP65 water/dust protection.
- Equipped with Ratchet Stop for constant measuring force.
- With SPC data output.

340-351-32

340-520

SPECIFICATIONS

Inch / Metric

Order No.	Range (in)	Resolution	Flatness (in)	Parallelism (in)	Interchangeable anvils	Setting Standard Qty	Setting Standard Size (in)	Micrometer head stroke (in)
340-351-32*	0 - 6	0.00005 in/ 0.001 mm	0.000024	0.00012	6 pcs.	5	1 - 5	1
340-352-32*	6 - 12	0.0001 in/ 0.001 mm	0.00004	0.0002		6	6 - 11	
340-720	12 - 18			0.00028			12 - 17	
340-721	18 - 24			0.00036			18 - 23	
340-722	24 - 30			0.0004			24 - 29	
340-723	30 - 36			0.00044			30 - 35	

Metric

Order No.	Range (mm)	Resolution (mm)	Flatness (µm)	Parallelism (µm)	Interchangeable anvils	Setting Standard Qty	Setting Standard Size (mm)	Micrometer head stroke (mm)
340-251-32*	0 - 75	0.001	0.6	2	6 pcs.	5	25 - 125	25
	75 - 150			3				
340-252-32*	150 - 300			5		6	150 - 275	
340-520	300 - 400		1.0	6	4 pcs.	4	300 - 375	
340-521	400 - 500			7			400 - 475	
340-522	500 - 600			8			500 - 575	
340-523	600 - 700			9			600 - 675	
340-524	700 - 800			10			700 - 775	
340-525	800 - 900			11			800 - 875	
340-526	900 - 1000			12			900 - 975	

* IP65 model.
- Power source for models up to 12 in.: SR44 battery (1 pc.), **938882** included as standard
  Power source for models over 12 in.: SR44 battery (2 pcs.), **938882** included as standard

Mitutoyo

Micrometers

Outside Micrometers
SERIES 340 — with Interchangeable Anvils

DIMENSIONS

Over 400 mm up to 1000 mm

Unit: mm

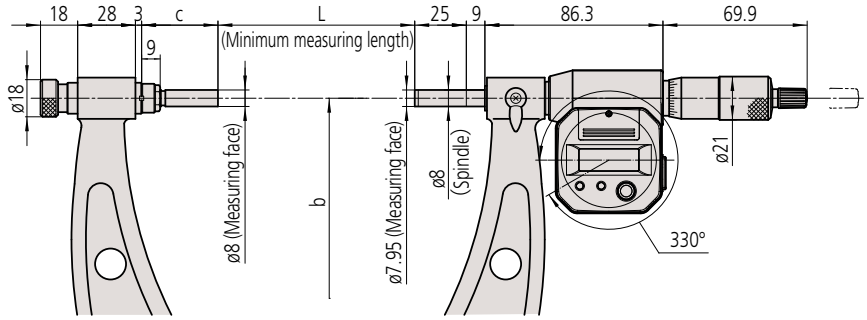

		L: Range (mm)				b
Range	300 - 400 mm models	300 - 325	325 - 350	350 - 375	375 - 400	224
Range	400 - 500 mm models	400 - 425	425 - 450	450 - 475	475 - 500	273
Range	500 - 600 mm models	500 - 525	525 - 550	550 - 575	575 - 600	332
Range	600 - 700 mm models	600 - 625	625 - 650	650 - 675	675 - 700	382
Range	700 - 800 mm models	700 - 725	725 - 750	750 - 775	775 - 800	430
Range	800 - 900 mm models	800 - 825	825 - 850	850 - 875	875 - 900	480
Range	900 - 1000 mm models	900 - 925	925 - 950	950 - 975	975 - 1000	530
c: Overall (mm)		87	62	37	12	

Need Support?

Measurement Example

Mechanism

Ratchet stop type

Friction thimble type

Micrometer with Vernier scale (graduation: 0.001 mm)

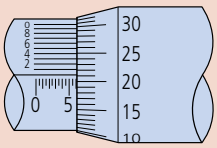

Outside Micrometers SERIES 102

- Standard analog micrometer. Thanks to a heat-insulated frame, it is resistant to heat and therefore delivers accurate measurement results.
- Measuring faces: Carbide tipped.
- Tapered frame (behind anvil) for measuring in hard-to-reach places.
- Equipped with Ratchet Stop for constant measuring force.

Ratchet stop
102-327-10

SPECIFICATIONS

Inch

Order No.	Range (in)	Graduation (in)	Measuring force (N)	Accuracy* (in)	Flatness (in)	Parallelism (in)	Constant measuring force
102-327-10	0 - 1	0.0001	5 - 10	±0.0001	0.000024	0.00008	Ratchet stop
102-329-10							Friction thimble
102-328-10	1 - 2						Ratchet stop
102-330-10							Friction thimble
102-331-10	2 - 3						Ratchet stop
102-332-10	3 - 4			±0.00015		0.00012	Ratchet stop

Metric

Order No.	Range (mm)	Graduation (mm)	Measuring force (N)	Accuracy* (µm)	Flatness (µm)	Parallelism (µm)	Constant measuring force
102-301	0 - 25	0.01	5 - 10	±2	0.6	2	Ratchet stop
102-302	25 - 50						
102-303	50 - 75						
102-304	75 - 100			±3		3	

Metric With Vernier scale

Order No.	Range (mm)	Graduation (mm)	Measuring force (N)	Accuracy* (µm)	Flatness (µm)	Parallelism (µm)	Constant measuring force
102-311	0 - 25	0.001	5 - 10	±1	0.3	1	Ratchet stop
102-313							Friction thimble
102-312	25 - 50			±2			Ratchet stop

Metric Micrometer set

Order No.	Range (mm)	Models included
102-911-40	0 - 100 (Four micrometers per set)	• **102-301** **102-302** **102-303** **102-304** • 3 micrometer standards

* E_{MPE} (ISO 3611:2023 and ASME B89.1.13-2013)

DIMENSIONS

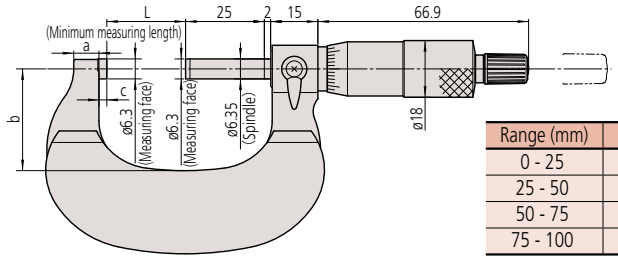

Unit: mm

Range (mm)	L	a	b	c
0 - 25	0	5	26	2.5
25 - 50	25	7.8	32	
50 - 75	50	10.6	45	
75 - 100	75	11	58	

Micrometers

Ratchet Thimble Micrometer
SERIES 102 — Outside Micrometers

- The ratchet thimble mechanism enables easy one-handed operation, useful for inspecting samples during the manufacturing process.
- Ratchet function works both from the thimble and the speeder.
- Tapered frame (behind anvil) for measuring in hard-to-reach places.
- Heat-insulated frame.
- Measuring faces: Carbide tipped.

B

102-717

Measurement Example

Internal structure

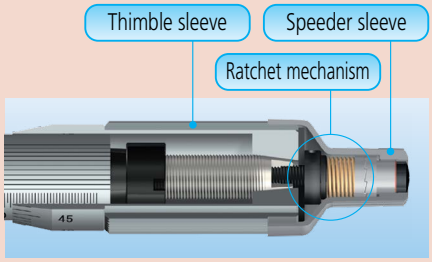

SPECIFICATIONS

Inch

Order No.	Range (in)	Graduation (in)	Measuring force (N)	Accuracy* (in)	Flatness (in)	Parallelism (in)	Mass (g)
102-717	0 - 1	0.0001	5 - 10	±0.0001	0.000024	0.00008	180
102-718	1 - 2						270

Metric

Order No.	Range (mm)	Graduation (mm)	Measuring force (N)	Accuracy* (µm)	Flatness (µm)	Parallelism (µm)	Mass (g)
102-701	0 - 25	0.01	5 - 10	±2	0.6	2	180
102-707		0.001					
102-702	25 - 50	0.01					270
102-708		0.001					

* E_{MPE} (ISO 3611:2023 and ASME B89.1.13-2013)

DIMENSIONS

Unit: mm

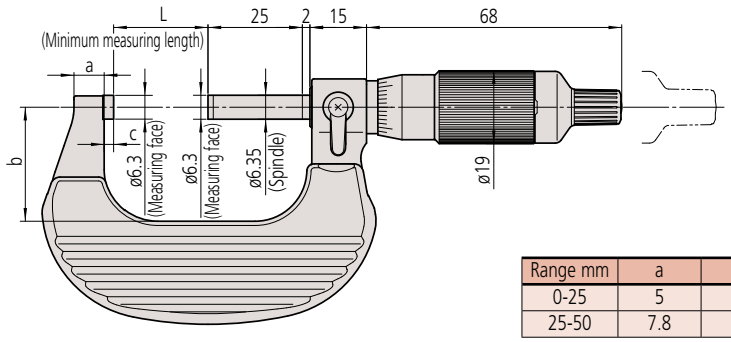

Range mm	a	b	c
0-25	5	26	2.5
25-50	7.8	30	

Need Service?

Outside Micrometers
SERIES 103

- This is a classic analog micrometer that represents the roots of our company's foundation.
- Measuring faces: Carbide tipped.

Measurement Example

103-135

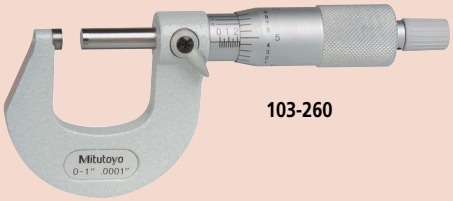

103-260

103-180

Inch Tapered Frame with Ratchet Stop

Order No.	Range (in)	Graduation (in)	Accuracy (in)	Measuring force (N)
103-259	0 - 1	.001	±.0001	5 - 10
103-260*	0 - 1	.0001	±.0001	
103-262*	1 - 2	.0001	±.0001	

* .0001" Reading is obtained with Vernier

Inch With ratchet stop

Order No.	Range (in)	Graduation (in)	Accuracy* (in)	Flatness (in)	Parallelism (in)	Measuring force (N)
103-131	0 - 1	0.0001	±0.0001	0.000024	0.00008	5 - 10
103-132	1 - 2					
103-217	2 - 3					
103-218	3 - 4		±0.00015		0.00012	
103-219	4 - 5					
103-220	5 - 6					
103-221	6 - 7		±0.0002		0.00016	
103-222	7 - 8					
103-223	8 - 9					
103-224	9 - 10		±0.00025			
103-225	10 - 11					
103-226	11 - 12				0.0002	
103-177	0 - 1	0.001	±0.0001		0.00008	
103-178	1 - 2					
103-179	2 - 3					
103-180	3 - 4		±0.00015		0.00012	
103-181	4 - 5					
103-182	5 - 6					
103-183	6 - 7		±0.0002		0.00016	
103-184	7 - 8					
103-185	8 - 9					
103-186	9 - 10		±0.00025			
103-187	10 - 11					
103-188	11 - 12				0.0002	10 - 15
103-189	12 - 13		±0.0003	0.00004		
103-190	13 - 14					
103-191	14 - 15					
103-192	15 - 16		±0.00035		0.00024	
103-193	16 - 17					
103-194	17 - 18					
103-195	18 - 19		±0.0004		0.00028	
103-196	19 - 20					
103-197	20 - 21					
103-198	21 - 22		±0.00045			
103-199	22 - 23					
103-200	23 - 24				0.00032	
103-201	24 - 25		±0.0005			
103-202	25 - 26					
103-203	26 - 27					
103-204	27 - 28		±0.00055		0.00036	
103-205	28 - 29					
103-206	29 - 30					
103-207	30 - 31		±0.0006		0.0004	
103-208	31 - 32					
103-209	32 - 33					
103-210	33 - 34		±0.00065			
103-211	34 - 35					
103-212	35 - 36				0.00044	
103-213	36 - 37		±0.0007			
103-214	37 - 38					
103-215	38 - 39					
103-216	39 - 40		±0.00075		0.00048	

Inch With friction thimble

Order No.	Range (in)	Graduation (in)	Accuracy* (in)	Flatness (in)	Parallelism (in)	Measuring force (N)
103-135	0 - 1	0.0001	±0.0001	0.000024	0.00008	5 - 10
103-136	1 - 2					

* E_{MPE} (ISO 3611:2023 and ASME B89.1.13-2013)

Micrometers

103-137

103-139-10

Metric With ratchet stop

Order No.	Range (mm)	Measuring force (N)	Graduation (mm)	Accuracy* (µm)	Flatness (µm)	Parallelism (µm)
103-129	0 - 25	5 - 10	0.001	±2	0.6	2
103-130	25 - 50					
103-139-10	50 - 75		0.01			
103-140-10	75 - 100			±3		3
103-141-10	100 - 125					
103-142-10	125 - 150					
103-143-10	150 - 175			±4		
103-144-10	175 - 200					4
103-145-10	200 - 225					
103-146-10	225 - 250			±5		
103-147-10	250 - 275					
103-148-10	275 - 300					5
103-149	300 - 325	10 - 15		±6	1	
103-150	325 - 350					
103-151	350 - 375					
103-152	375 - 400			±7		6
103-153	400 - 425					
103-154	425 - 450					
103-155	450 - 475			±8		
103-156	475 - 500					7
103-157	500 - 525					
103-158	525 - 550			±9		
103-159	550 - 575					
103-160	575 - 600					8
103-161	600 - 625			±10		
103-162	625 - 650					
103-163	650 - 675					
103-164	675 - 700			±11		9
103-165	700 - 725					
103-166	725 - 750					
103-167	750 - 775			±12		
103-168	775 - 800					10
103-169	800 - 825					
103-170	825 - 850			±13		
103-171	850 - 875					
103-172	875 - 900					11
103-173	900 - 925			±14		
103-174	925 - 950					
103-175	950 - 975					
103-176	975 - 1000			±15		12

Metric With ratchet stop

Order No.	Range (mm)	Measuring force (N)	Graduation (mm)	Accuracy* (µm)	Flatness (µm)	Parallelism (µm)
103-137	0 - 25	5 - 10	0.01	±2	0.6	2
103-138	25 - 50					
103-255	50 - 75		0.001			
103-256	75 - 100			±3		3
103-257	100 - 125					
103-258	125 - 150					

* *E*MPE (ISO 3611:2023 and ASME B89.1.13-2013)

Inch Sets

0.001 in Graduation Sets

103-904-10
- Range: 0 - 6 in (6 pcs./set)
- Models included: **103-177**, **103-178**, **103-179**, **103-180**, **103-181**, **103-182**, 5 micrometer standards

103-905-10
- Range: 0 - 12 in (12 pcs./set)
- Models included: All micrometers of **103-904-10** and **103-906** in one set, 11 micrometer standards

103-906
- Range: 6 - 12 in (6 pcs./set)
- Models included: **103-183**, **103-184**, **103-185**, **103-186**, **103-187**, **103-188**, 6 micrometer standards

0.0001 in Graduation Sets

103-929
- Range: 0 - 3 in (3 pcs./set)
- Models included: **103-177**, **103-178**, **103-179**

103-930
- Range: 0 - 4 in (4 pcs./set)
- Models included: **103-177**, **103-178**, **103-179**, **103-180**

103-907-40
- Range: 0 - 6 in (6 pcs./set)
- Models included: **103-135**, **103-136**, **103-217**, **103-218**, **103-219**, **103-220**

103-909
- Range: 6 - 12 in (6 pcs./set)
- Models included: **103-221**, **103-222**, **103-223**, **103-224**, **103-225**, **103-226**

103-908-40
- Range: 0 - 12 in (12 pcs./set)
- Models included: **103-135**, **103-136**, **103-217**, **103-218**, **103-219**, **103-220**, **103-221**, **103-222**, **103-223**, **103-224**, **103-225**, **103-226**

Outside Micrometers
SERIES 103

DIMENSIONS

103-137 and 103-138, Models 75 mm to 300 mm Unit: mm

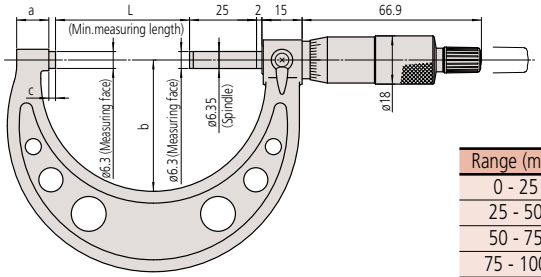

Range (mm)	L	a	b	c
0 - 25	0	9	28	2.5
25 - 50	25	10	38	
50 - 75	50	12	49	
75 - 100	75	14	60	
100 - 125	100	16.7	79	5.3
125 - 150	125	18.8	94	5.7
150 - 175	150	19.1	106	6.1
175 - 200	175	18.2	118	6.3
200 - 225	200	16.8	130	6.7
225 - 250	225	18	143	5.5
250 - 275	250		156	6.5
275 - 300	275		169	

DIMENSIONS

Models 325 mm to 1000 mm Unit: mm

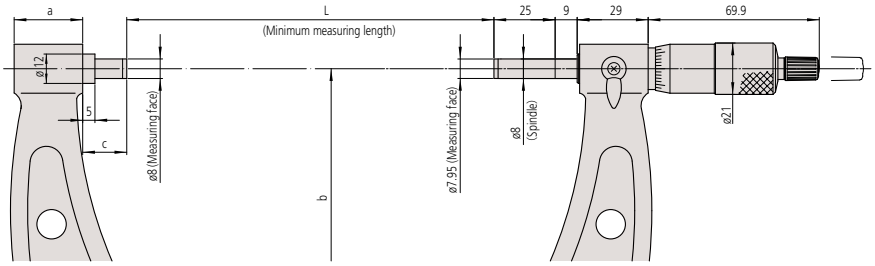

Range (mm)	L	a	b	c
300 - 325	300	28	187	18
325 - 350	325		199	
350 - 375	350		212	
375 - 400	375		224	
400 - 425	400		236	
425 - 450	425		248	
450 - 475	450		261	
475 - 500	475		273	
500 - 525	500		307	40
525 - 550	525			15
550 - 575	550		332	40
575 - 600	575			15
600 - 625	600		355	40
625 - 650	625			15

Range (mm)	L	a	b	c
650 - 675	650	28	382	40
675 - 700	675			15
700 - 725	700		405	40
725 - 750	725			15
750 - 775	750		430	40
775 - 800	775			15
800 - 825	800		455	40
825 - 850	825			15
850 - 875	850		480	40
875 - 900	875			15
900 - 925	900		505	40
925 - 950	925			15
950 - 975	950		530	40
975 - 1000	975			15

Metric Sets

103-927-10
- Range: 0 - 75 mm (3 pcs./set)
- Models included: **103-137**, **103-138**, **103-139-10**

103-913-50
- Range: 50 - 150 mm (6 pcs./set)
- Models included:
  103-137, **103-138**, **103-139-10**, **103-140-10**, **103-141-10**, **103-142-10**

103-914-50
- Range: 50 - 300 mm (12 pcs./set)
- Models included:
  103-137, **103-138**, **103-139-10**, **103-140-10**, **103-141-10**, **103-142-10**, **103-143-10**, **103-144-10**, **103-145-10**, **103-146-10**, **103-147-10**, **103-148-10**

103-915-10
- Range: 150 - 300 mm (6 pcs./set)
- Models included:
  103-143-10, **103-144-10**, **103-145-10**, **103-146-10**, **103-147-10**, **103-148-10**

Need Calibration?

Micrometers

Digit Outside Micrometers SERIES 193

- Mechanical digit counter with .001 in counter resolution. The .0001 in graduations are obtained by using the Vernier scale.
- Measuring faces: Carbide tipped.

B

193-211

Measurement Example

193-923
- Range: 0 - 3 in

193-902
- Range: 0 - 100 mm

SPECIFICATIONS

Inch With friction thimble

Order No.	Range (in)	Accuracy* (in)	Flatness (in)	Parallelism (in)	Graduation (in)
193-211	0 - 1	±0.0001	0.000024	0.00008	0.0001*[1]
193-212	1 - 2				

Inch With ratchet stop

Order No.	Range (in)	Accuracy* (in)	Flatness (in)	Parallelism (in)	Graduation (in)
193-213	2 - 3	±0.0001	0.000024	0.00008	0.0001*[1]
193-214	3 - 4	±0.00015		0.00012	

Metric With ratchet stop

Order No.	Range (mm)	Accuracy* (µm)	Flatness (µm)	Parallelism (µm)	Graduation (mm)
193-111	0 - 25	±2	0.6	2	0.001*[1]
193-112	25 - 50				
193-113	50 - 75				
193-114	75 - 100	±3		3	
193-101	0 - 25	±2		2	0.01
193-102	25 - 50				
193-103	50 - 75				
193-104	75 - 100	±3		3	

Inch Micrometer set

Order No.	Range (in)	Models included	Flatness (in)	Parallelism (in)
193-923	0 - 3 (3 pcs./set)	• **193-211**, **193-212**, **193-213** • 2 micrometer standards	0.000024	0.00008

Metric Micrometer set

Order No.	Range (mm)	Models included	Flatness (µm)	Parallelism (µm)
193-901	0 - 75 (3 pcs./set)	• **193-101**, **193-102**, **193-103** • 2 micrometer standards	0.6	2
193-902	0 - 100 (4 pcs./set)	• **193-101**, **193-102**, **193-103**, **193-104** • 3 micrometer standards		3

* *E*MPE (ISO 3611:2023 and ASME B89.1.13-2013)
*1 Reading is obtained with Vernier.

Find a Distributor

Digit Outside Micrometers
SERIES 193

DIMENSIONS

Unit: mm

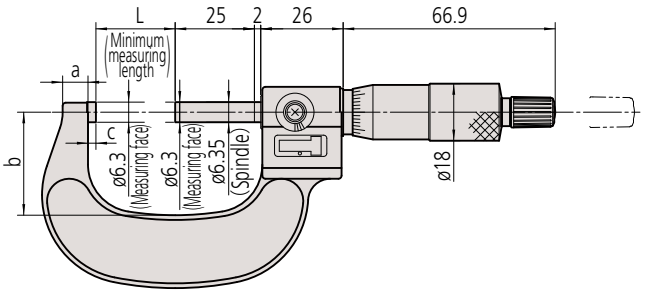

Range (mm)	L	a	b	c
0 - 25	0	5	26	2.5
25 - 50	25	8	32.5	2
50 - 75	50	9	45	
75 - 100	75		57	

DIMENSIONS

Unit: mm

193-211

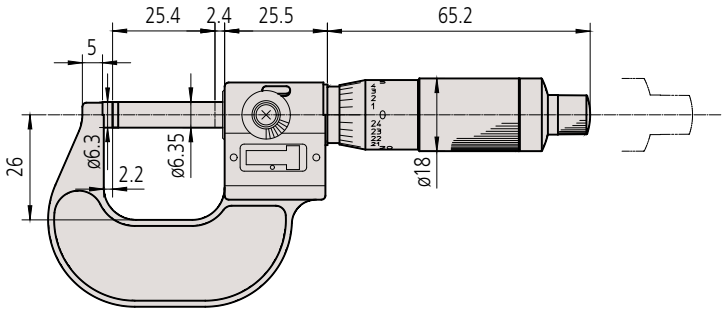

193-212

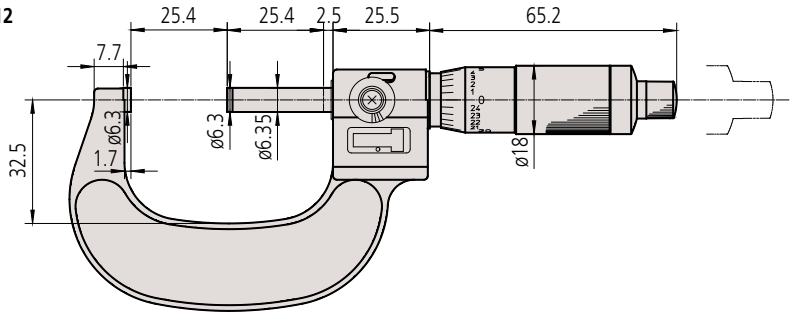

Micrometers

Outside Micrometers
SERIES 104 — with Interchangeable Anvils

- Wide measuring range with interchangeable anvils.
- Measuring face of the spindle is carbide tipped (standard model).
- Equipped with Ratchet Stop for constant measuring force.

104-138

Technical Data

Accuracy: ±[0.0002+0.00005(L/3)] in
L = Max Range (Inch)

SPECIFICATIONS

Inch

Order No.	Range (in)	Graduation (in)	Flatness (in)	Parallelism (in)	Interchangeable anvils	Setting Standard Qty	Setting Standard Size (in)	Micrometer head stroke (in)
Analog								
104-165	0 - 2	0.0001	0.000024	0.00008	1 pc.	1	1	1
104-149	0 - 4	0.001		0.00012	4 pcs.	3	1 - 3	
104-137	0 - 6				6 pcs.	5	1 - 5	
104-162	2 - 6				4 pcs.	4	2 - 5	
104-150	4 - 8			0.00016			4 - 7	
104-138	6 - 12			0.0002	6 pcs.	6	6 - 11	
104-151	8 - 12				4 pcs.	4	8 - 11	
104-152	12 - 16		0.00004	0.00024			12 - 15	
104-201	12 - 18				6 pcs.	6	12 - 17	
104-153	16 - 20			0.00028	4 pcs.	4	16 - 19	
104-202	18 - 24			0.00032	6 pcs.	6	18 - 23	
104-154	20 - 24				4 pcs.	4	20 - 23	
104-155	24 - 28			0.00036			24 - 27	
104-203	24 - 30				6 pcs.	6	24 - 29	
104-156	28 - 32			0.0004	4 pcs.	4	28 - 31	
104-204	30 - 36			0.00044	6 pcs.	6	30 - 35	
104-157	32 - 36				4 pcs.	4	32 - 35	
104-158	36 - 40			0.00048			36 - 39	
104-205	36 - 42				6 pcs.	6	36 - 41	

Metric

Order No.	Range (mm)	Graduation (mm)	Flatnessr (µm)	Parallelism (µm)	Interchangeable anvils	Setting Standard Qty	Setting Standard Size (mm)	Micrometer head stroke (mm)
Analog								
104-171*	0 - 50	0.01	0.6	2	1 pc.	1	25	25
104-139A	0 - 100			3	4 pcs.	3	25 - 75	
104-135A	0 - 150				6 pcs.	5	25 - 125	
104-161A	50 - 150				4 pcs.	4	50 - 125	
104-140A	100 - 200			4			100 - 175	
104-136A	150 - 300			5	6 pcs.	6	150 - 275	
104-141A	200 - 300				4 pcs.	4	200 - 275	
104-142A	300 - 400		1.0	6			300 - 375	
104-143A	400 - 500			7			400 - 475	
104-144A	500 - 600			8			500 - 575	
104-145A	600 - 700			9			600 - 675	
104-146A	700 - 800			10			700 - 775	
104-147A	800 - 900			11			800 - 875	
104-148A	900 - 1000			12			900 - 975	

* The frame is fitted with a heat shield.

Got Questions?

Outside Micrometers
SERIES 104 — with Interchangeable Anvils

DIMENSIONS

Unit: mm

104-135A

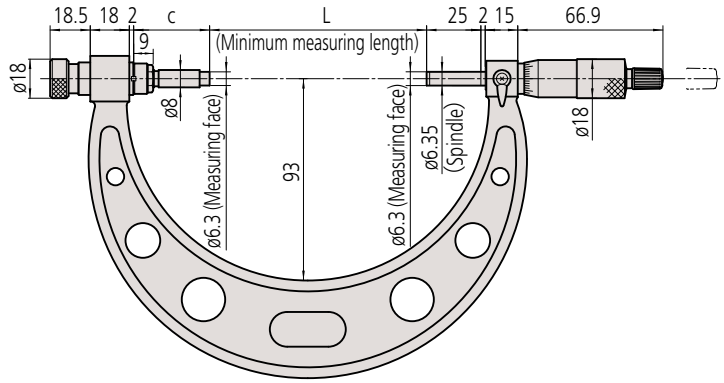

Interchangeable Anvil

		L: Range (mm)					
Range	0 - 150 mm models	0 - 25	25 - 50	50 - 75	75 - 100	100 - 125	125 - 150
Range	150 - 300 mm models	150 - 175	175 - 200	200 - 225	225 - 250	250 - 275	275 - 300
	c: Overall length (mm)	135	110	85	60	35	10
	Interchangeable anvil	M1	M2	M3	M4	M5	M6

		L: Range (mm)			
Range	300 - 400 mm models	300 - 325	325 - 350	350 - 375	375 - 400
Range	400 - 500 mm models	400 - 425	425 - 450	450 - 475	475 - 500
Range	500 - 600 mm models	500 - 525	525 - 550	550 - 575	575 - 600
Range	600 - 700 mm models	600 - 625	625 - 650	650 - 675	675 - 700
Range	700 - 800 mm models	700 - 725	725 - 750	750 - 775	775 - 800
Range	800 - 900 mm models	800 - 825	825 - 850	850 - 875	875 - 900
Range	900 - 1000 mm models	900 - 925	925 - 950	950 - 975	975 - 1000
	c: Overall length (mm)	87	62	37	12
	Interchangeable anvil	M3	M4	M5	M6

Micrometers

Outside Micrometers
SERIES 105 — with Anvil Extension Collars

- Adjustable measuring range with extension collars.
- 2 in/50 mm spindle stroke.
- Measuring faces: Carbide tipped.
- Equipped with Ratchet Stop for constant measuring force.

B

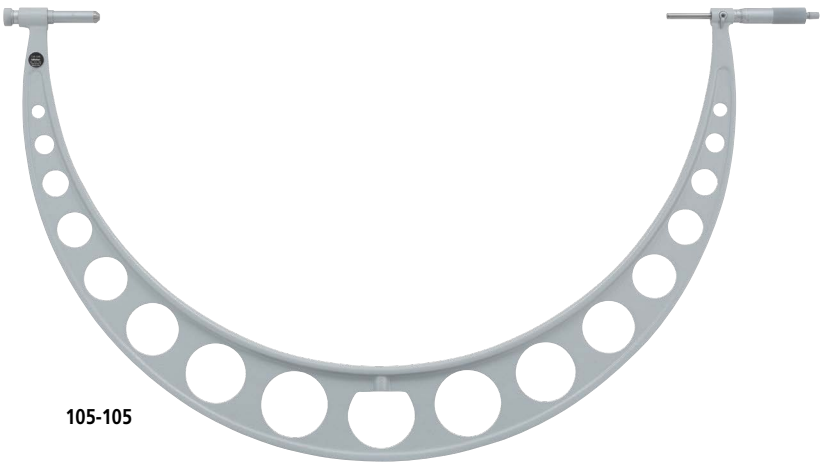

105-105

Technical Data
Accuracy: ±(6+L/75)µm, L=max. range (mm)

Extension Collar

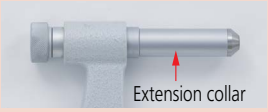

Measuring range 700 to 750 mm with **105-105**

Measuring range 750 to 800 mm with **105-105**

SPECIFICATIONS

Metric

Order No.	Range (mm)	Graduation (mm)	Extension Collars	Setting Standard	Flatness (µm)	Parallelism (µm)
105-103	500 - 600	0.01	1 pc. (50 mm)	2 pcs.	1.3	8
105-104	600 - 700					9
105-105	700 - 800					10
105-106	800 - 900					11
105-107	900 - 1000					12

Get a Quote

Outside Micrometers
SERIES 105 — with Anvil Extension Collars

- Square and round pipes are combined to create a lightweight, rigid frame.
- Wide measuring range with anvil extension collars.
- 2 in/50 mm spindle stroke.
- Includes workpiece stopper.
- Measuring faces: Carbide tipped.
- Equipped with Ratchet Stop for constant measuring force.

Technical Data
Accuracy: ±(6+L/75)µm, L=max. range (mm)

Measurement Example

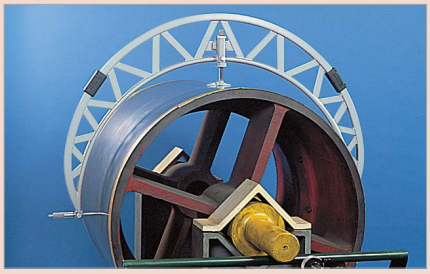

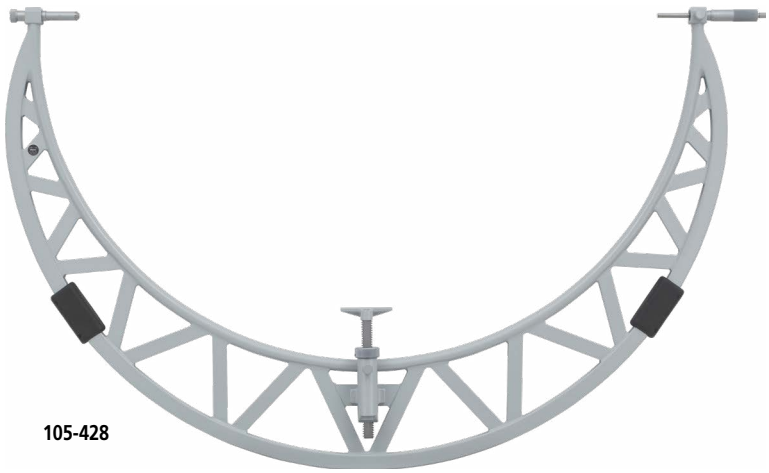

105-428

SPECIFICATIONS

Inch

Order No.	Range (in)	Graduation (in)	Extension Collars	Setting Standard (pcs.)	Flatness (in)	Parallelism (in)
105-428	40 - 44	0.001	1 pc. (2 in)	2	0.000052	0.00052
105-429	44 - 48					0.00056
105-430	48 - 52					0.00060
105-431	52 - 56					0.00064
105-432	56 - 60					0.00068
105-433	60 - 64					0.00072

Metric

Order No.	Range (mm)	Graduation (mm)	Extension Collars	Setting Standard (pcs.)	Flatness (µm)	Parallelism (µm)
(every 100 mm)						
105-408	1000 - 1100	0.01	1 pc. (50 mm)	2	1.3	13
105-409	1100 - 1200					14
105-410	1200 - 1300					15
105-411	1300 - 1400					16
105-412	1400 - 1500					17
105-413	1500 - 1600					18
(every 200 mm)						
105-418	1000 - 1200	0.01	2 pcs. (50 mm, 100 mm)	4 (every 50 mm)	1.3	14
105-419	1200 - 1400					16
105-420	1400 - 1600					18
105-421	1600 - 1800					20
105-422	1800 - 2000					22

B

DIMENSIONS

Over 1200 mm up to 2000 mm

Unit: mm

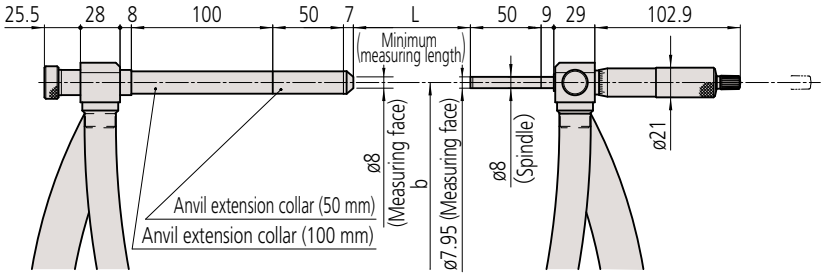

b: distance to workpiece stop

Range (mm)	L	b
1000 - 1200	1000	500 - 600
1200 - 1400	1200	600 - 700
1400 - 1600	1400	700 - 800
1600 - 1800	1600	800 - 900
1800 - 2000	1800	900 - 1000

Got Questions?

Limit Micrometers
SERIES 113

- Can be used as a Go/No-go gage by setting the upper and lower limits.
- Provided with a standard bar for the 113-103
- Measuring faces: Carbide tipped.

Measurement Example

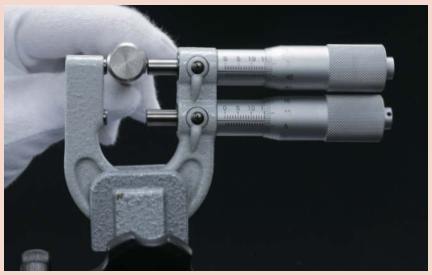

113-102

SPECIFICATIONS

Metric

Order No.	Range (mm)	Graduation (mm)	Accuracy* (µm)	Flatness (µm)	Parallelism (µm)
113-102	0 - 25	0.01	±3	0.6	3
113-103	25 - 50				

* E_{MPE} (ISO 3611:2023 and ASME B89.1.13-2013)

DIMENSIONS

Unit: mm

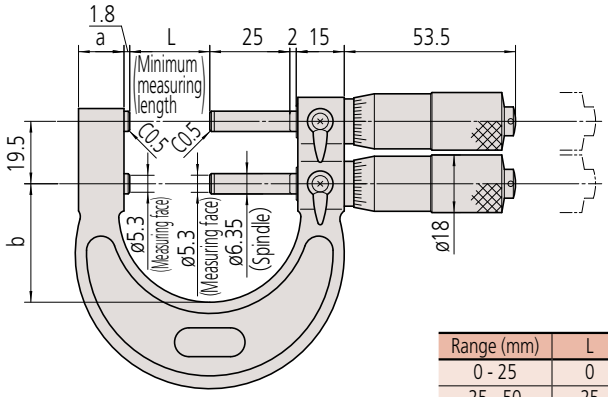

Range (mm)	L	a	b
0 - 25	0	14.2	23
25 - 50	25		37

Micrometers

MeasurLink ENABLED
Data Management Software by Mitutoyo
U-WAVE fit

B

Caliper Type Micrometers SERIES 343

- Effective for measuring workpiece features where access is difficult with a standard micrometer.
- Measuring faces: Carbide tipped.
- Equipped with Ratchet Stop for constant measuring force.
- With SPC data output.
- Includes standard bar (except 0-1 in and 0-25mm models)

343-350-32

Measurement Example

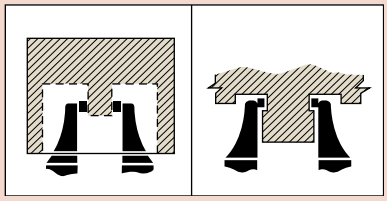

SPECIFICATIONS

Inch / Metric

Order No.	Range (in)	Graduation (in)	Accuracy* (in)	Flatness (in)	Parallelism (in)
343-350-32	0 - 1	0.00005 in / 0.001 mm	±0.00025	0.000012	0.00012
343-351-32	1 - 2		±0.0003		
343-352-32	2 - 3		±0.00035		0.00016
343-353-32	3 - 4		±0.0004		

Metric

Order No.	Range (mm)	Resolution (mm)	Accuracy* (µm)	Flatness (µm)	Parallelism (µm)
343-250-32	0 - 25	0.001	±5	0.3	3
343-251-32	25 - 50		±6		
343-252-30	50 - 75		±7		4
343-253-30	75 - 100		±8		

- Power source: SR44 battery (1 pc.), **938882** included as standard

* E_{MPE} (ISO 3611:2023 and ASME B89.1.13-2013)

Optional Output Devices

Order No.	Description
Wired	
264-020	USB Input tool (**IT-020U**)
- 05CZA662	Connecting Cable (**1m**)
- 05CZA663	Connecting Cable (**2m**)
06AFM380B	USB Input Tool Direct (**2m**)
Wireless	
264-622	Transmitter (**IP67**)
264-626	Transmitter (**IP67, Bluetooth**)
264-623	Transmitter (**Buzzer**)
264-627	Transmitter (**Buzzer, Bluetooth**)
- 02AZF310	Connecting Unit (**Adapter**)
- 02AZE140B	Connecting Cable (**foot switch compatible**)

Note: Model uses connector type "B"
For additional accessories refer to pages B-70 to B-76

DIMENSIONS

Digimatic
Measuring range up to 100 mm

Unit: mm

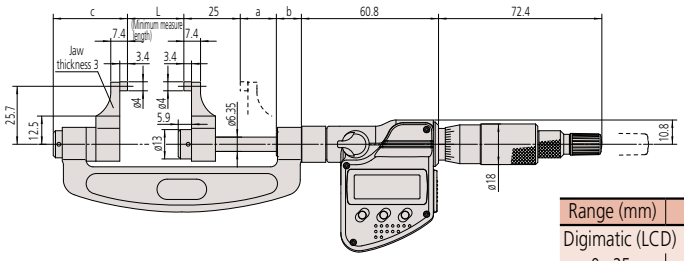

Range (mm)	L	a	b	C
Digimatic (LCD)				
0 - 25	0	16	11.1	32.9
25 - 50	25			
50 - 75	50			
75 - 100	75			

Caliper Type Micrometers SERIES 143

- Effective for measuring workpiece features where access is difficult with a standard micrometer.
- Measuring faces: Carbide tipped.
- Equipped with Ratchet Stop for constant measuring force.
- Includes standard bar (except 0-1 in and 0-25mm models).

143-121

SPECIFICATIONS

Inch

Order No.	Range (in)	Graduation (in)	Accuracy* (in)	Flatness (in)	Parallelism (in)
143-121	0 - 1	0.001	±0.00025	0.000012	0.00012
143-122	1 - 2		±0.0003		
143-123	2 - 3		±0.00035		

Metric

Order No.	Range (mm)	Graduation (mm)	Accuracy* (µm)	Flatness (µm)	Parallelism (µm)
143-101	0 - 25	0.01	±5	0.3	3
143-102	25 - 50		±6		
143-103	50 - 75		±7		4
143-104	75 - 100		±8		
143-105	100 - 125		±9		5
143-106	125 - 150				
143-107	150 - 175		±10		
143-108	175 - 200				
143-109	200 - 225		±11		6
143-110	225 - 250				
143-111	250 - 275		±12		
143-112	275 - 300				7

* E_{MPE} (ISO 3611:2023 and ASME B89.1.13-2013)

DIMENSIONS

Analog
Measuring range up to 300 mm

Unit: mm

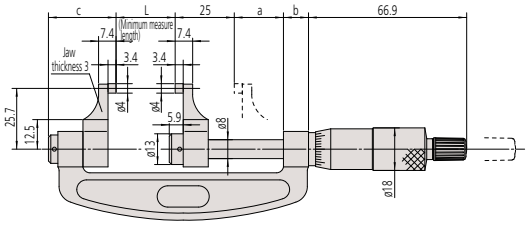

Range (mm)	L	a	b	C
Analog				
0 - 25	0	20.8	10.6	28.6
25 - 50	25			
50 - 75	50			
75 - 100	75			
100 - 125	100			
125 - 150	125			
150 - 175	150			
175 - 200	175			
200 - 225	200	16.3	15	32.5
225 - 250	225			
250 - 275	250			
275 - 300	275			

Need Repair?

Micrometers

Screw Thread Micrometers
SERIES 125 — Fixed Anvil/Spindle Tip Type

- Directly indicates screw pitch diameter (no need for calculation).
- Fixed anvil type. Select the right model to meet the specifications of your screw thread.
- Equipped with Ratchet Stop for constant measuring force.
- Supplied with a setting standard for adjusting zero point for metric (unified) 60° threads (except 0-25 mm model).

125-103

Technical Data

Accuracy: ±[0.0002+0.00005(L/3)] in
L = Max Range (Inch)

Measurement Example

SPECIFICATIONS

Metric

Order No.	Range (mm)	Graduation (mm)	Thread to be measured (Metric/Unified)
125-101	0 - 25	0.01	0.4 - 0.5 mm/64 - 48 TPI
125-102			0.6 - 0.9 mm/44 - 28 TPI
125-103			1 - 1.75 mm/24 - 14 TPI
125-104			2 - 3 mm/13 - 9 TPI
125-105			3.5 - 5 mm/8 - 5 TPI
125-106	25 - 50		0.4 - 0.5 mm/64 - 48 TPI
125-107			0.6 - 0.9 mm/44 - 28 TPI
125-108			1 - 1.75 mm/24 - 14 TPI
125-109			2 - 3 mm/13 - 9 TPI
125-110			3.5 - 5 mm/8 - 5 TPI
125-111	50 - 75		0.6 - 0.9 mm/44 - 28 TPI
125-112			1 - 1.75 mm/24 - 14 TPI
125-113			2 - 3 mm/13 - 9 TPI
125-114			3.5 - 5 mm/8 - 5 TPI
125-115			5.5 - 7 mm/4.5 - 3.5 TPI
125-116	75 - 100		0.6 - 0.9 mm/44 - 28 TPI
125-117			1 - 1.75 mm/24 - 14 TPI
125-118			2 - 3 mm/13 - 9 TPI
125-119			3.5 - 5 mm/8 - 5 TPI
125-120			5.5 - 7 mm/4.5 - 3.5 TPI

DIMENSIONS

Unit: mm

125-101, 125-106

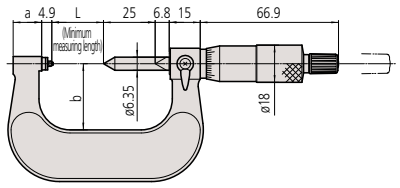

Range (mm)	L	a	b
0 - 25	0	13.8	25
25 - 50	25		32

125-111, 125-116

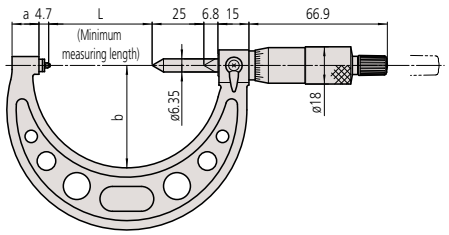

Range (mm)	L	a	b
50 - 75	50	12	49
75 - 100	75	14	63

Where to Buy

MeasurLink ENABLED
Data Management Software by Mitutoyo

U-WAVE fit

IP65

Dust- and Water-Protected
TÜVRheinland CERTIFIED
www.tuv.com ID 0000040191

Applicable models: **series 326**

Optional Output Devices

Order No.	Description
Wired	
264-020	USB Input tool (**IT-020U**)
- 05CZA662	Connecting Cable (**1m**)
- 05CZA663	Connecting Cable (**2m**)
06AFM380B	USB Input Tool Direct (**2m**)
Wireless	
264-622	Transmitter (**IP67**)
264-626	Transmitter (**IP67, Bluetooth**)
264-623	Transmitter (**Buzzer**)
264-627	Transmitter (**Buzzer, Bluetooth**)
- 02AZF310	Connecting Unit (**Adapter**)
- 02AZE140B	Connecting Cable (**foot switch compatible**)

Note: Model uses connector type "B"
For additional accessories refer to pages B-70 to B-76

Technical Description

- Anvils/spindle tips

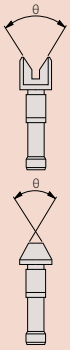

- Allowable error of the angle of anvils and spindle tips

Type	Metric (Unified)	Whitworth (Unified)	Half angle error α
Pitch (mm), Nominal designation of threads per inch		W1	±30'
	M1 (U1)	W2	±30'
		W3	±20'
	M2 (U2)	W4	±20'
		W5	±15'
	M3 (U3)	W6	±15'
	M4 (U4)	W7	±10'
		W8	±10'
	M5 (U5)	W9	±10'
	M6 (U6)	W10	±10'

Note: This chart indicates the difference between the angle made by anvil's contact faces and spindle's axes and the half angle with error α. Metric/Unified θ=60°, Whitworth θ=55°

Screw Thread Micrometers
SERIES 326, 126 — Interchangeable Anvil/Spindle Tip Type

- This is a screw thread micrometer with changeable anvil and spindle tips. It enables direct reading of screw pitch diameter. Both analog and digital types are available.
- Interchangeable anvil and spindle tips are optional. Select the right model to meet the specifications of your screw thread.
- Equipped with Ratchet Stop for constant measuring force.
- Supplied with a setting standard for adjusting zero point for metric (unified) 60° threads (except 0 -1 in / 0 - 25mm models).
- With SPC data output.

B

326-351-32

SPECIFICATIONS

Inch / Metric

Order No.	Range (in)	Resolution	Accuracy
326-351-32	0 - 1	0.00005 in/ 0.001 mm	±.0002"
326-352-32	1 - 2		
326-353-32	2 - 3		
326-354-32	3 - 4		±.00025"

Metric

Order No.	Range (mm)	Resolution (mm)	Accuracy
326-251-32	0 - 25	0.001	±4μm
326-252-32	25 - 50		
326-253-32	50 - 75		
326-254-32	75 - 100		±5μm

- Power source: SR44 battery (1 pc.), **938882** included as standard

Anvil-spindle tip set:

Applications	Set Order No.	Tip Information		
		Threads Per Inch	Pitch (mm)	**Individual Order No.**
Metric Screw, Unified screw (60° threads)	**126-800**	64-48 (M1)	0.4-0.5	**126-801**
		44-28 (M2)	0.6-0.9	**126-802**
		24-14 (M3)	1-1.75	**126-803**
		13-9 (M4)	2-3	**126-804**
		8-5 (M5)	3.5-5	**126-805**
		4.5-3.5 (M6)	5.5-7	**126-806**
Whitworth Screw (55° threads)	**126-810**	60-48	-	**126-811**
		48-40	-	**126-812**
		40-32	-	**126-813**
		32-24	-	**126-814**
		24-18	-	**126-815**
		18-14	-	**126-816**
		14-10	-	**126-817**
		10-7	-	**126-818**
		7-4.5	-	**126-819**
		4.5-3.5	-	**126-820**

Features: 60 degree or 55 degree V-anvil and conical spindle (interchangeable) are optional, which are made of high-grade special steel, hardened and precision ground.

Storage box included.

Measurement Example

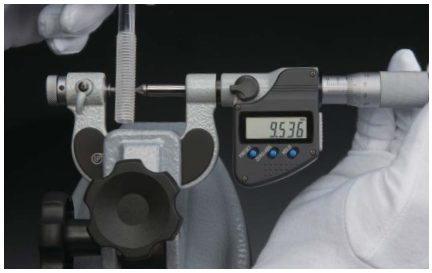

Interchangeable anvils/spindle tips (optional)

Mitutoyo

Micrometers

Screw Thread Micrometers
SERIES 126 — Interchangeable Anvil/Spindle Tip Type

- This is a screw thread micrometer with changeable anvil and spindle tips. It enables direct reading of screw pitch diameter. Both analog and digital types are available.
- Interchangeable anvil and spindle tips are optional. Select the right model to meet the specifications of your screw thread.
- Equipped with Ratchet Stop for constant measuring force.
- Supplied with a setting standard for adjusting zero point for metric (unified) 60° threads (except 0 -1 in / 0 - 25mm models).

B

126-137

SPECIFICATIONS

Inch

Order No.	Range (in)	Graduation (in)	Accuracy
126-137	0 - 1	0.001	±.0002"
126-138	1 - 2		
126-139	2 - 3		
126-140	3 - 4		±.00025"
126-141	4 - 5		
126-142	5 - 6		
126-143	6 - 7		±.0003"
126-901*	0 - 1		±.0002"
126-902*	1 - 2		
126-903*	2 - 3		
126-904*	3 - 4		±.00025"
126-905*	4 - 5		
126-906*	5 - 6		

* Includes **126-800** anvil kit

Metric

Order No.	Range (mm)	Graduation (mm)	Accuracy
126-125	0 - 25	0.01	±4µm
126-126	25 - 50		
126-127	50 - 75		
126-128	75 - 100		±5µm
126-129	100 - 125		
126-130	125 - 150		
126-131	150 - 175		±6µm
126-132	175 - 200		
126-133	200 - 225		
126-134	225 - 250		±7µm
126-135	250 - 275		
126-136	275 - 300		

DIMENSIONS

Unit: mm

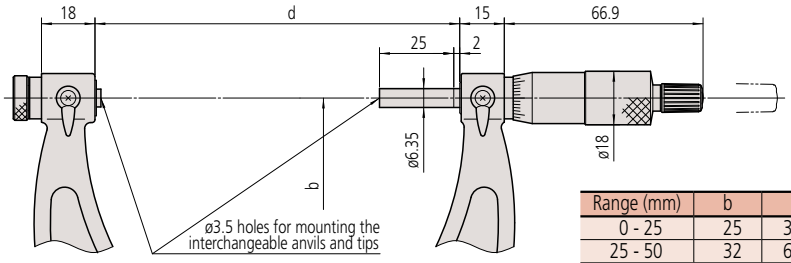

Range (mm)	b	d
0 - 25	25	39
25 - 50	32	64
50 - 75	45	89.5
75 - 100	65	115.1
100 - 125	79	140.1
125 - 150	93	165.1
150 - 175	105	190
175 - 200	118	214
200 - 225	131	240
225 - 250	144	265
250 - 275	156	290
275 - 300	169	314

Need Support?

MeasurLink ENABLED
Data Management Software by Mitutoyo

U-WAVE fit

IP65

Dust- and Water-Protected
TÜVRheinland CERTIFIED
www.tuv.com ID 0000040191

Measurement Example

Optional Output Devices

Order No.	Description
Wired	
264-020	USB Input tool (**IT-020U**)
- 05CZA662	Connecting Cable (**1m**)
- 05CZA663	Connecting Cable (**2m**)
06AFM380B	USB Input Tool Direct (**2m**)
Wireless	
264-622	Transmitter (**IP67**)
264-626	Transmitter (**IP67, Bluetooth**)
264-623	Transmitter (**Buzzer**)
264-627	Transmitter (**Buzzer, Bluetooth**)
- 02AZF310	Connecting Unit (**Adapter**)
- 02AZE140B	Connecting Cable (**foot switch compatible**)

Note: Model uses connector type "B"
For additional accessories refer to pages B-70 to B-76

Disc Micrometers
SERIES 323 — Rotating Spindle Type

- Measures "root tangent length" of spur gears and helical gears.
- Equipped with Ratchet Stop for constant measuring force.
- With SPC data output.
- .028"/ 0.7mm (1mm: models over 100mm) edge thickness to enter narrow recesses.
- With standard bar (except 0 -1 in / 0 - 25mm models)

323-350-32

SPECIFICATIONS

Inch / Metric

Order No.	Range (in)	Resolution (in)	Accuracy* (in)	Flatness (in)	Parallelism (in)	Anvil dia. (in)	Measurable module
323-350-32	0 - 1	0.00005 in/ 0.001 mm	±0.0002	0.00004	0.0002	ø0.787	0.5 - 6
323-351-32	1 - 2						
323-352-32	2 - 3		±0.0003		0.0003		
323-353-32	3 - 4						

Metric

Order No.	Range (mm)	Resolution (mm)	Accuracy* (µm)	Flatness (µm)	Parallelism (µm)	Anvil dia. (mm)	Measurable module
323-250-32	0 - 25	0.001	±4	1	4	ø20	0.5 - 6
323-251-30	25 - 50						
323-252-30	50 - 75		±6		6		
323-253-32	75 - 100						

- Power source: SR44 battery (1 pc.), **938882** included as standard

* E_{MPE} (ISO 3611:2023 and ASME B89.1.13-2013)

DIMENSIONS

Digimatic models up to 75 mm measuring range

Unit: mm

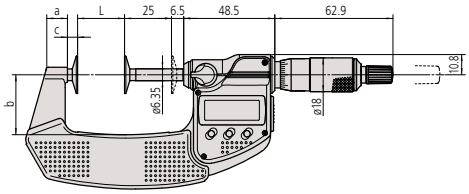

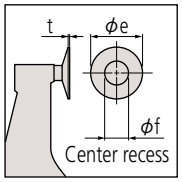

Digimatic models up to 100 mm measuring range

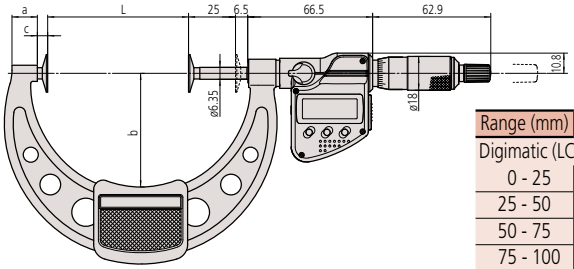

Range (mm)	L	a	b	c	e	f	t
Digimatic (LCD)							
0 - 25	0	9.2	25	4.5	20	8	0.7
25 - 50	25	11	31	5.4			
50 - 75	50	12.2	50	5.5			
75 - 100	75	14	60				

Mitutoyo

Micrometers

Disc Micrometers
SERIES 223, 123 — Rotating Spindle Type

- Can be used for making root tangent measurements on spur gears and helical gears.
- Equipped with Ratchet Stop for constant measuring force.

B

123-125

223-125

SPECIFICATIONS

Inch

Order No.	Range (in)	Graduation (in)	Accuracy* (in)	Flatness (in)	Parallelism (in)	Anvil dia. (in)	Measurable module
Mechanical counter model							
223-125	0 - 1	0.001	±0.0002	0.00004	0.0002	ø0.787	0.5 - 6
Analog							
123-125	0 - 1	0.001	±0.0002	0.00004	0.0002	ø0.787	0.5 - 6
123-126	1 - 2						
123-127	2 - 3		±0.0003		0.0003		
123-128	3 - 4						

Metric

Order No.	Range (mm)	Graduation (mm)	Accuracy* (µm)	Flatness (µm)	Parallelism (µm)	Anvil dia. (mm)	Measurable module
Mechanical counter model							
223-101	0 - 25	0.01	±4	1	4	ø20	0.5 - 6
223-102	25 - 50						
Analog							
123-101	0 - 25	0.01	±4	1	4	ø20	0.5 - 6
123-113*1							
123-102	25 - 50						
123-114*1							
123-103	50 - 75		±6		6		
123-115*1							
123-104	75 - 100						
123-116*1							
123-105	100 - 125		±7	1.6	7	ø30	0.7 - 11
123-106	125 - 150						
123-107	150 - 175		±8		8		
123-108	175 - 200						
123-109	200 - 225						
123-110	225 - 250		±9		9		
123-111	250 - 275						
123-112	275 - 300						

*E_{MPE} (ISO 3611:2023 and ASME B89.1.13-2013)
*1 The measuring discs have carbide tips.

Need Service?

Disc Micrometers
SERIES 223, 123

DIMENSIONS

Analog models up to 50 mm measuring range

Unit: mm

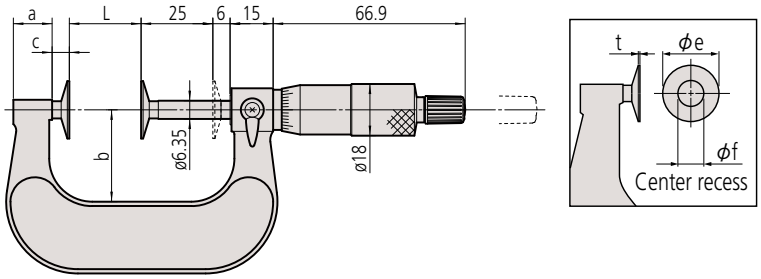

Analog models over 50 mm measuring range

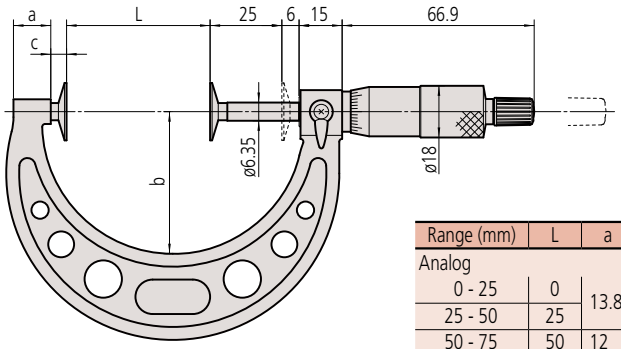

Range (mm)	L	a	b	c	e	f	t
Analog							
0 - 25	0	13.8	25	5.7	20	8 (9.8)	0.7 (0.7)
25 - 50	25		32				
50 - 75	50	12	49	5.5			
75 - 100	75	14	63				
100 - 125	100	12	79	6	30	12	1
125 - 150	125	14.5	94				
150 - 175	150	15.2	106				
175 - 200	175	14.5	118				
200 - 225	200	13.5	130				
225 - 250	225		143				
250 - 275	250	14.5	156				
275 - 300	275		169				

Note: Data in ( ) applies to those with carbide-faced disks.

Mitutoyo

Micrometers

Disc Micrometers
SERIES 369 — Non-rotating Spindle Type

- Can be used for making root tangent measurements on spur gears and helical gears.
- Non-rotating spindle eliminates torque on workpiece.
- Measurable range of gear pitch: 0.5 to 6 module.
- Equipped with Ratchet Stop for constant measuring force.

Digimatic
369-350-32

MeasurLink ENABLED
Data Management Software by Mitutoyo

U-WAVE fit

IP65 ABSOLUTE™

Applicable models: **369-411-20/412-20**

Measurement Example

Optional Output Devices

Order No.	Description
Wired	
264-020	USB Input tool (**IT-020U**)
- 05CZA662	Connecting Cable (**1m**)
- 05CZA663	Connecting Cable (**2m**)
06AFM380B	USB Input Tool Direct (**2m**)
Wireless	
264-622	Transmitter (**IP67**)
264-626	Transmitter (**IP67, Bluetooth**)
264-623	Transmitter (**Buzzer**)
264-627	Transmitter (**Buzzer, Bluetooth**)
- 02AZF310	Connecting Unit (**Adapter**)
- 02AZE140B	Connecting Cable (**foot switch compatible**)

Note: Model uses connector type "B"
For additional accessories refer to pages B-70 to B-76

SPECIFICATIONS

Inch / Metric

Order No.	Range (in)	Resolution	Anvil dia. (in)	Accuracy* (in)	Flatness (in)	Parallelism (in)	Measuring force (N)
With SPC data output							
369-350-32	0 - 1	0.00005 in/ 0.001 mm	ø0.787	±0.0002	0.00004	0.0002	3 - 8
369-351-32	1 - 2						
369-352-32	2 - 3			±0.0003		0.0003	
369-353-30	3 - 4						

Metric

Order No.	Range (mm)	Resolution (mm)	Anvil dia. (mm)	Accuracy* (µm)	Flatness (µm)	Parallelism (µm)	Measuring force (N)
With SPC data output							
369-250-32	0 - 25	0.001	ø20	±4	1	4	3 - 8
369-251-32	25 - 50						
369-252-32	50 - 75			±6		6	
369-253-32	75 - 100						

- Power source: SR44 battery (1 pc.), **938882** included as standard

* E_{MPE} (ISO 3611:2023 and ASME B89.1.13-2013)

DIMENSIONS

Digimatic models up to 75 mm Unit: mm

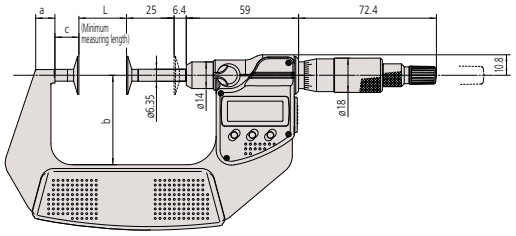

Digimatic models over 75 mm

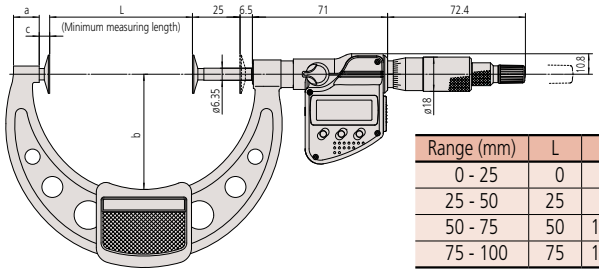

Range (mm)	L	a	b	c
0 - 25	0	7	32	12.9
25 - 50	25	9.8	47	
50 - 75	50	11.2	60	
75 - 100	75	13.5		5.5

Optional Output Devices

Order No.	Description
Wired	
264-020	USB Input tool (**IT-020U**)
- 05CZA662	Connecting Cable (**1m**)
- 05CZA663	Connecting Cable (**2m**)
06AFM380B	USB Input Tool Direct (**2m**)
Wireless	
264-622	Transmitter (**IP67**)
264-626	Transmitter (**IP67, Bluetooth**)
264-623	Transmitter (**Buzzer**)
264-627	Transmitter (**Buzzer, Bluetooth**)
- 02AZD790B	Connecting Cable
- 02AZE140B	Connecting Cable (**foot switch compatible**)

Note: Model uses connector type "B"
For additional accessories refer to pages B-70 to B-76

Disc Micrometers
SERIES 369, 227 — Non-rotating Spindle Type

- Can be used for making root tangent measurements on spur gears and helical gears.
- Heat-insulated frame, tapered (on the anvil side) for hard-to-reach places.
- Non-rotating spindle eliminates torque on workpiece.
- Measurable range of gear pitch: 0.5 to 6 module (**series 227**: 0.4 to 3 module).
- Equipped with Ratchet Stop for constant measuring force.

Quickmike type
369-421-22

SPECIFICATIONS

Inch / Metric

Order No.	Range (in)	Resolution	Anvil dia. (in)	Accuracy* (in)	Flatness (in)	Parallelism (in)	Measuring force (N)
QuickMike type							
369-421-22	0 - 1.2	0.00005 in/ 0.001 mm	ø0.787	±0.0002	0.00004	0.0002	3 - 8
369-422-22	1 - 2.2						

Metric

Order No.	Range (mm)	Resolution (mm)	Anvil dia. (mm)	Accuracy* (µm)	Flatness (µm)	Parallelism (µm)	Measuring force (N)
QuickMike type							
369-411-20	0 - 30	0.001	ø20	±4	1	4	3 - 8
369-412-22	25 - 55						
QuickMike type adjustable measuring force							
227-221-22	0 - 15	0.001	ø14.3	±4	1	3	0.5 - 2.5
227-223-22	0 - 10						2 - 10

- Power source: SR44 battery (1 pc.), **938882** included as standard

* E_{MPE} (ISO 3611:2023 and ASME B89.1.13-2013)

DIMENSIONS

Quickmike type

Unit: mm

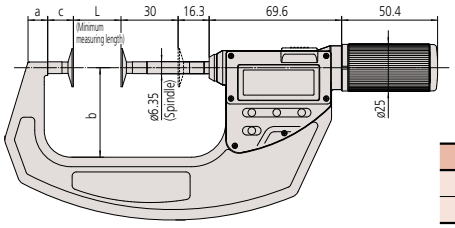

Range (mm)	L	a	b	c
0 - 30	0	8.5	36	13.5
25 - 55	25	10.3	47	

Quickmike adjustable measuring force type

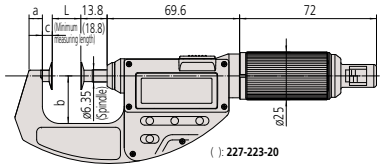

Range (mm)	L	a	b	c
0 - 15	0	6.2	25	5.2
0 - 10				

Need Calibration?

Micrometers

Disc Micrometers
SERIES 169 — Non-rotating Spindle Type

- Can be used for making root tangent measurements on spur gears and helical gears.
- Non-rotating spindle eliminates torque on workpiece.
- Measurable range of gear pitch: 0.5 to 6 module.
- Equipped with Ratchet Stop for constant measuring force.

B

169-203-10

SPECIFICATIONS

Inch

Order No.	Range (in)	Graduation (in)	Anvil dia. (in)	Accuracy* (in)	Flatness (in)	Parallelism (in)	Measuring force (N)
Analog							
169-203-10	0 - 1	0.001	ø0.787	±0.0002	0.00004	0.0002	3 - 8
169-204-10	1 - 2						
169-206-10	2 - 3			±0.0003		0.0003	
169-208-10	3 - 4						

Metric

Order No.	Range (mm)	Graduation (mm)	Anvil dia. (mm)	Accuracy* (µm)	Flatness (µm)	Parallelism (µm)	Measuring force (N)
Analog							
169-201-10	0 - 25	0.01	ø20	±4	1	4	3 - 8
169-202-10	25 - 50						
169-205-10	50 - 75			±6		6	
169-207-10	75 - 100						

* *E*MPE (ISO 3611:2023 and ASME B89.1.13-2013)

DIMENSIONS

Analog models up to 50 mm

Unit: mm

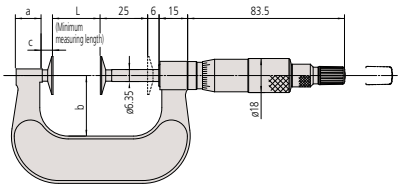

Analog models over 50 mm

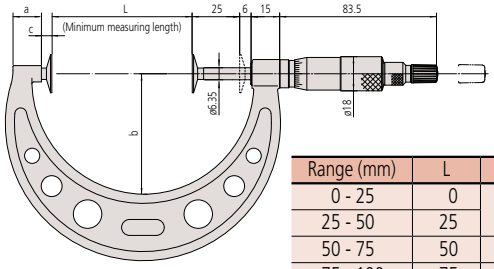

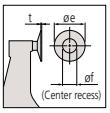

Range (mm)	L	a	b	c	e	f	t
0 - 25	0	13.8	25	5.7	20	8	0.7
25 - 50	25		32				
50 - 75	50	12	49	5.5			
75 - 100	75	14	63				

Find a Distributor

Paper Thickness Micrometers
SERIES 169 — Non-rotating Spindle Type

- For paper thickness measurement.
- Non-rotating spindle eliminates torque on workpiece.
- Anvil diameter: ø14.3 mm (without recess)
- Equipped with Ratchet Stop for constant measuring force. (8.02±0.8 N)

Measurement Example

169-103-10

SPECIFICATIONS

Inch

Order No.	Range (in)	Graduation (in)	Accuracy* (in)	Flatness (in)	Parallelism (in)
169-103-10	0 - 1	0.001	±0.0002	0.00004	0.00015

Metric

Order No.	Range (mm)	Graduation (mm)	Accuracy* (µm)	Flatness (µm)	Parallelism (µm)
169-101-10	0 - 25	0.01	±4	1	3

* E_{MPE} (ISO 3611:2023 and ASME B89.1.13-2013)

DIMENSIONS

Unit: mm

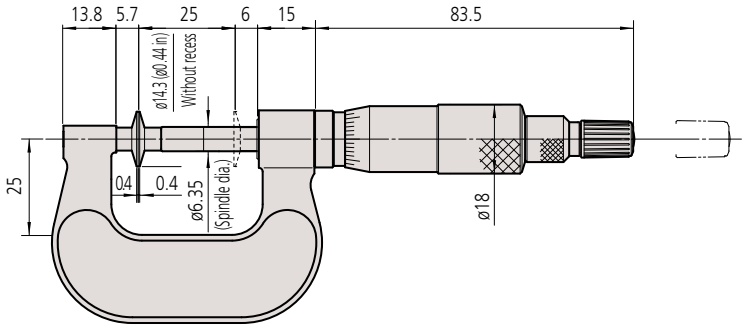

( ): inch model

Micrometers

Gear Tooth Micrometers
SERIES 324 — Interchangeable Ball Anvil/Spindle Tip Type

- This specialized micrometer series measures gear over-pin diameters. Attach optional ball probes to each measuring face before use.
- With SPC data output.
- Interchangeable ball anvils/spindle tips for various gear modules (0.5 to 5.25) are optional.

B

324-351-32

SPECIFICATIONS

Inch/Metric

Order No.	Range (in)	Resolution	Accuracy
324-351-32	0 - 1	0.00005 in/ 0.001 mm	±.0002"
324-352-32	1 - 2		
324-353-32	2 - 3		
324-354-30	3 - 4		±.00025"

Metric

Order No.	Range (mm)	Resolution (mm)	Accuracy
324-251-30	0 - 25	0.001	±4μm
324-252-32	25 - 50		
324-253-30	50 - 75		
324-254-30	75 - 100		±5μm

- Power source: SR44 battery (1 pc.), **938882** included as standard

DIMENSIONS

Digimatic models up to 50 mm

Unit: mm

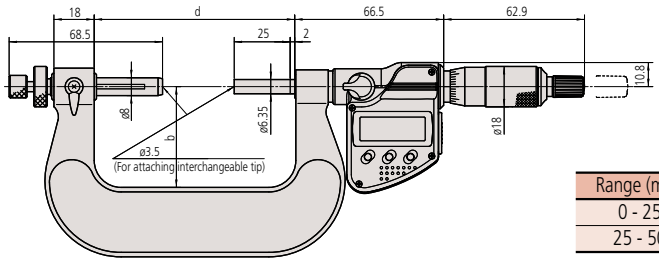

Range (mm)	b	d
0 - 25	32	64
25 - 50	45	89.5

Digimatic models over 50 mm up to 100 mm

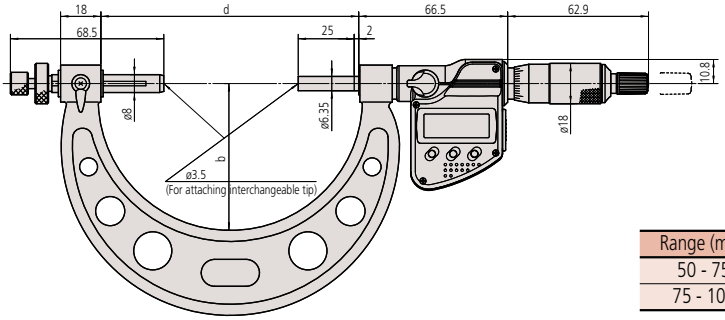

Range (mm)	b	d
50 - 75	65	115.1
75 - 100	79	140.1

MeasurLink ENABLED
Data Management Software by Mitutoyo

U-WAVE fit

IP65

Dust- and Water-Protected
TÜVRheinland CERTIFIED
www.tuv.com ID 0000040191

Measurement Example

Optional Output Devices

Order No.	Description
Wired	
264-020	USB Input tool (**IT-020U**)
- 05CZA662	Connecting Cable (**1m**)
- 05CZA663	Connecting Cable (**2m**)
06AFM380B	USB Input Tool Direct (**2m**)
Wireless	
264-622	Transmitter (**IP67**)
264-626	Transmitter (**IP67, Bluetooth**)
264-623	Transmitter (**Buzzer**)
264-627	Transmitter (**Buzzer, Bluetooth**)
- 02AZF310	Connecting Unit (**Adapter**)
- 02AZE140B	Connecting Cable (**foot switch compatible**)

Note: Model uses connector type "B"
For additional accessories refer to pages B-70 to B-76

Gear Tooth Micrometers
SERIES 124 — Interchangeable Ball Anvil/Spindle Tip Type

- Intended for making over-pin diameter measurements on gears using precision ball anvils/spindle tips (optional).
- Equipped with Ratchet Stop for constant measuring force.
- Interchangeable ball anvils/spindle tips for various gear modules (0.5 to 5.25) are optional.

124-173

Optional Accessories

- Interchangeable ball anvil/spindle tip set

Order No.	Diameter* (mm)	Gear module	Dia. pitch
124-801	0.8	0.5 - 0.55	50
124-802	1.0	0.6 - 0.65	45
124-803	1.191 (3/64 in)	0.7 - 0.8	35 - 30
124-821	1.5	0.9 - 1	28 - 26
124-804	1.588 (1/16 in)	0.9 - 1	28 - 26
124-805	2.0	1.25	22
124-806	2.381 (3/32 in)	1.5	17
124-822	2.5	1.5	17
124-807	3.0	1.75	15
124-808	3.175 (1/8 in)	—	14
124-823	3.5	2	13
124-809	3.969 (5/32 in)	2	13
124-810	4.0	2.25	11
124-824	4.5	2.5	10
124-811	4.763 (3/16 in)	2.5	10
124-812	5.0	2.75	9
124-813	5.556 (7/32 in)	3.0 - 3.25	8
124-814	6.0	3.5	7
124-815	6.35 (1/4 in)	3.75	7
124-816	7.0	4.0	6.5
124-817	7.144 (9/32 in)	4.25	6
124-818	7.938 (5/16 in)	4.5	5.5
124-819	8.0	4.75	5.5
124-820	8.731 (11/32 in)	5.0 - 5.25	5

*Carbide-tipped for 2mm and smaller

SPECIFICATIONS

Metric

Order No.	Range (mm)	Graduation (mm)	Accuracy
124-173	0 - 25	0.01	±4µm
124-174	25 - 50		
124-175	50 - 75		
124-176	75 - 100		±5µm
124-177	100 - 125		
124-178	125 - 150		
124-179	150 - 175		±6µm
124-180	175 - 200		
124-181	200 - 225		
124-182	225 - 250		±7µm
124-183	250 - 275		
124-195	275 - 300		

DIMENSIONS

Analog models up to 50 mm

Unit: mm

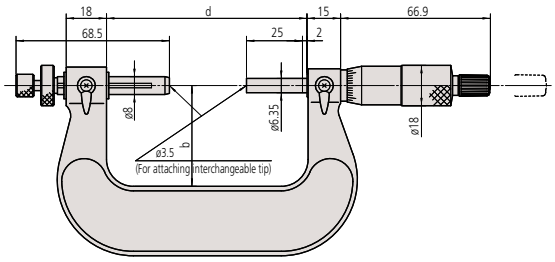

Range (mm)	b	d
0 - 25	32	64
25 - 50	45	89.5

Analog models over 50 mm up to 300 mm

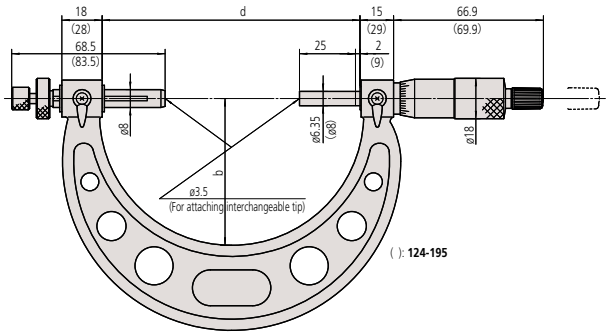

Range (mm)	b	d
50 - 75	65	115.1
75 - 100	79	140.1
100 - 125	93	165.1
125 - 150	105	190
150 - 175	118	214
175 - 200	131	240
200 - 225	144	265
225 - 250	156	290
250 - 275	169	314
275 - 300	187	352

Got Questions?

Micrometers

Sheet Metal Micrometers SERIES 389

- The U-shaped micrometer is ideal for measuring the thickness of sheet metal at a considerable distance from the edge.
- IP65 water/dust protection (except for **389-514** and **389-714**).
- Measuring faces: Carbide tipped.
- Profile of measuring faces: Flat-Flat, Spherical-Flat and Spherical-Spherical.
- Equipped with Ratchet Stop for constant measuring force.

389-351-32

MeasurLink ENABLED
Data Management Software by Mitutoyo

U-WAVE fit

IP65

Dust- and Water-Protected

Applicable models: **series 389**
(excluding **389-514** and **389-714**)

SPECIFICATIONS

Inch / Metric

Order No.	Range (in)	Resolution	Accuracy* (in)	Flatness (in)	Parallelism (in)	Throat depth (in)	Measuring surfaces
Digimatic							
389-351-32	0 - 1	0.00005 in/ 0.001 mm	±0.0002	0.000024	0.00012	6	F-F
389-361-32							S-F
389-371-32							S-S
389-714			±0.00025	0.00004		12	F-F
389-352-32	1 - 2		±0.0002	0.000024		6	
389-362-32							S-F
389-372-32							S-S

Metric

Order No.	Range (mm)	Resolution (mm)	Accuracy* (µm)	Flatness (µm)	Parallelism (µm)	Throat depth (mm)	Measuring surfaces
Digimatic							
389-251-32	0 - 25	0.001	±4	0.6	3	150	F-F
389-261-30							S-F
389-271-32							S-S
389-514			±5	1		300	F-F
389-252-30	25 - 50		±4	0.6		150	
389-262-30							S-F
389-272-32							S-S

- Power source for **389-2XX**, **3XX**: SR44 battery (1 pc.), **938882** included as standard
- Power source for **389-514**, **714**: SR44 battery (2 pcs.), **938882** included as standard

* *E*MPE (ISO 3611:2023 and ASME B89.1.13-2013)

DIMENSIONS

389-514, 389-714

Unit: mm

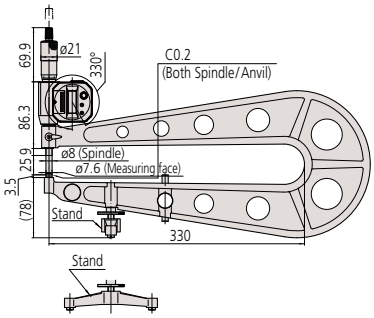

Optional Output Devices (6 in Throat Models)

Order No.	Description
Wired	
264-020	USB Input tool (**IT-020U**)
- 05CZA662	Connecting Cable (**1m**)
- 05CZA663	Connecting Cable (**2m**)
06AFM380B	USB Input Tool Direct (**2m**)
Wireless	
264-622	Transmitter (**IP67**)
264-626	Transmitter (**IP67, Bluetooth**)
264-623	Transmitter (**Buzzer**)
264-627	Transmitter (**Buzzer, Bluetooth**)
- 02AZF310	Connecting Unit (**Adapter**)
- 02AZE140B	Connecting Cable (**foot switch compatible**)

Note: Model uses connector type "B"
For additional accessories refer to pages B-70 to B-76

Optional Output Devices (12 in Throat Models)

Order No.	Description
Wired	
264-020	USB Input tool (**IT-020U**)
- 959149	Connecting Cable (**1m**)
- 959150	Connecting Cable (**2m**)
- 04AZB512	Connecting Cable, L-Type (**1m**)
- 04AZB513	Connecting Cable, L-Type (**2m**)
06AFM380C	USB Input Tool Direct (**2m**)
Wireless	
264-622	Transmitter (**IP67**)
264-626	Transmitter (**IP67, Bluetooth**)
264-623	Transmitter (**Buzzer**)
264-627	Transmitter (**Buzzer, Bluetooth**)
- 02AZD790C	Connecting Cable
- 02AZE140C	Connecting Cable (**foot switch compatible**)

Note: Model uses connector type "C"
For additional accessories refer to pages B-70 to B-76

Standard, Flat-Flat (F-F)

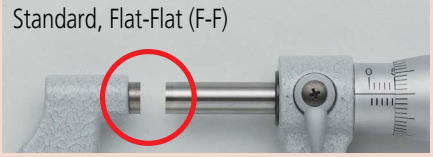

Spherical-Flat (S-F)

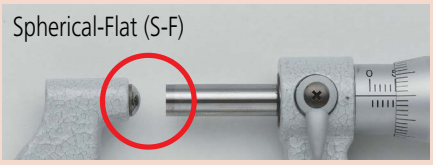

Spherical-Spherical (S-S)

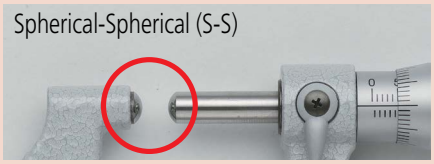

Sheet Metal Micrometers SERIES 118

- The U-shaped micrometer is ideal for measuring the thickness of sheet metal at a considerable distance from the edge.
- Measuring faces: Carbide tipped.
- Profile of measuring faces: Flat-Flat, Spherical-Flat and Spherical-Spherical.
- Equipped with Ratchet Stop for constant measuring force.

Standard, Flat-Flat (F-F)

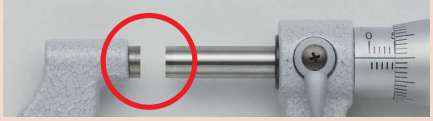

Spherical-Flat (S-F)

Spherical-Spherical (S-S)

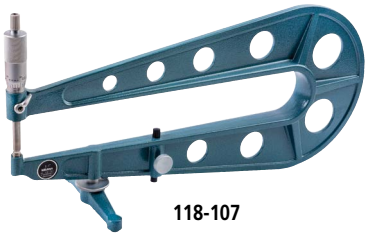

118-107

118-129

118-101

SPECIFICATIONS

Inch

Order No.	Range (in)	Graduation (in)	Accuracy* (in)	Flatness (in)	Parallelism (in)	Throat depth (in)	Measuring surfaces
Analog							
118-129	0 - 1	0.0001	±0.0002	0.000024	0.00012	6	F-F
118-116							S-F
118-120							S-S
118-107		0.001	±0.00025	0.00004		12	F-F
118-112	1 - 2		±0.0002	0.000024		6	

Metric

Order No.	Range (mm)	Graduation (mm)	Accuracy* (µm)	Flatness (µm)	Parallelism (µm)	Throat depth (mm)	Measuring surfaces
Analog							
118-101	0 - 25	0.01	±4	0.6	3	100	F-F
118-102						150	
118-114							S-F
118-118							S-S
118-103			±5	1		300	F-F
118-110	25 - 50		±4	0.6		150	
118-126							S-S

* E_{MPE} (ISO 3611:2023 and ASME B89.1.13-2013)

DIMENSIONS

Analog models

Unit: mm

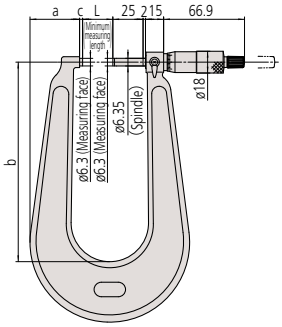

Order No.	L	a	b	c
118-101	0	34	110	2.5
118-102		43	160	
118-114				
118-118				
118-110	25	41	165	

Talk to Sales

Micrometers

Sheet Metal Micrometer — Dial Reading Model SERIES 119

- Large diameter dial model enables easy and quick measurement of sheet metal thickness.
- Adjustable anvil.
- Measuring faces: Carbide tipped.
- Equipped with Ratchet Stop for constant measuring force.

B

119-202

Measurement Example

SPECIFICATIONS

Metric

Order No.	Range (mm)	Graduation (mm)	Accuracy* (µm)	Throat depth (mm)
119-202	0 - 25	0.01	±4	50

* E_{MPE} (ISO 3611:2023 and ASME B89.1.13-2013)

DIMENSIONS

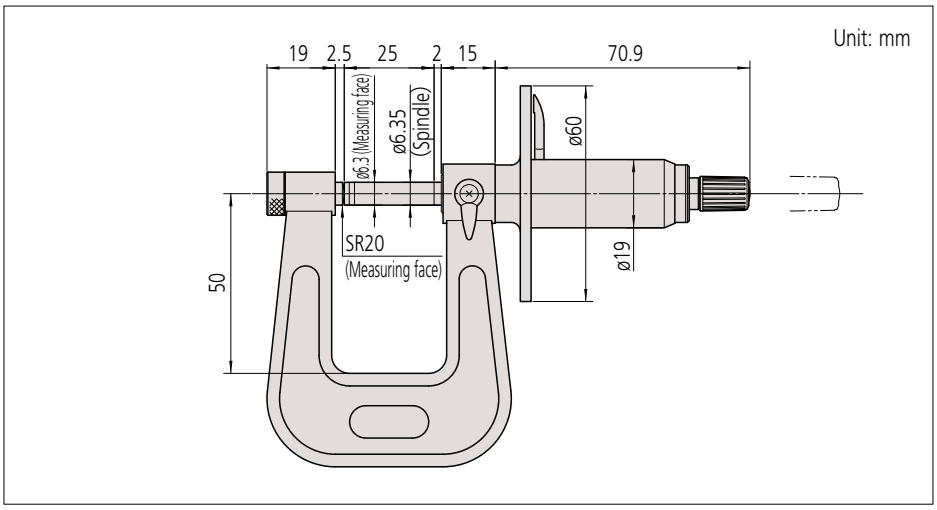

Need Repair?

IP65 Dust- and Water-Protected TÜVRheinland CERTIFIED www.tuv.com ID 0000040191

Applicable models: **series 395**

Micrometers

Tube Micrometers
SERIES 395, 115, 295 — Spherical Anvil and Flat Spindle Type

- The spherical anvil-type micrometer is convenient for measuring wall thickness of cylindrical workpieces. The spherical anvil comes into contact with a workpiece at a point instead of a surface area, thus increasing measurement accuracy.
- IP65 water/dust protection (series 395).
- Equipped with Ratchet Stop for constant measuring force.

Measurement Example

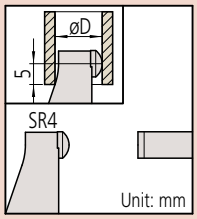

Other than **115-101**

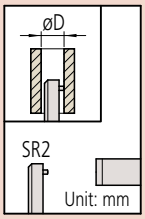

115-101

395-351-32

SPECIFICATIONS

Inch / Metric

Order No.	Range (in)	Resolution	Accuracy* (in)	øD (in)	Flatness (in)
Digimatic					
395-351-32	0 - 1	0.00005 in/ 0.001 mm	±0.0001	ø0.59	0.000012
395-352-32	1 - 2				
395-353-32	2 - 3			ø0.75	
395-354-32	3 - 4		±0.00015	ø0.79	

Metric

Order No.	Range (mm)	Resolution (mm)	Accuracy* (µm)	øD (mm)	Flatness (µm)
Digimatic					
395-251-30	0 - 25	0.001	±2	ø15	0.3
395-252-30	25 - 50				
395-253-30	50 - 75			ø19	
395-254-32	75 - 100		±3	ø20	

- Power source: SR44 battery (1 pc.), **938882** included as standard

* E_{MPE} (ISO 3611:2023 and ASME B89.1.13-2013)

Optional Output Devices

Order No.	Description
Wired	
264-020	USB Input tool (**IT-020U**)
- 05CZA662	Connecting Cable (**1m**)
- 05CZA663	Connecting Cable (**2m**)
06AFM380B	USB Input Tool Direct (**2m**)
Wireless	
264-622	Transmitter (**IP67**)
264-626	Transmitter (**IP67, Bluetooth**)
264-623	Transmitter (**Buzzer**)
264-627	Transmitter (**Buzzer, Bluetooth**)
- 02AZF310	Connecting Unit (**Adapter**)
- 02AZE140B	Connecting Cable (**foot switch compatible**)

Note: Model uses connector type "B"
For additional accessories refer to pages B-70 to B-76

115-153

295-153

SPECIFICATIONS

Inch

Order No.	Range (in)	Graduation (in)	Accuracy* (in)	øD (in)	Flatness (in)
Analog					
115-153	0 - 1	0.0001	±0.00015	ø0.40	0.000024
Mechanical counter model					
295-153	0 - 1	0.0001	±0.00015	ø0.40	0.000024

* E_{MPE} (ISO 3611:2023 and ASME B89.1.13-2013)

Metric

Order No.	Range (mm)	Graduation (mm)	Accuracy* (µm)	øD (mm)	Flatness (µm)
Analog					
115-101	0 - 15	0.01	±3	ø5.5	0.6
115-115	0 - 25			ø10	
115-116	25 - 50			ø11	
115-117	50 - 75			ø17	
115-118	75 - 100		±4	ø18	
Mechanical counter model					
295-115	0 - 25	0.01	±3	ø10	0.6

DIMENSIONS

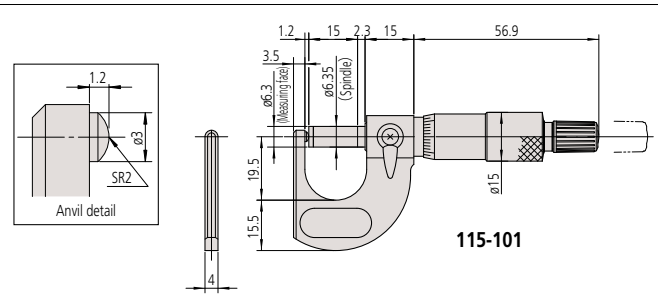

Micrometers

Tube Micrometers
SERIES 395, 115, 295 — Spherical Anvil and Spindle Type

- Designed to measure workpieces with concave-concave surfaces. The spherical anvil and spindle respectively come into contact with the workpiece at a point, thus increasing measurement accuracy.
- IP65 water/dust protection (series 395).
- Equipped with Ratchet Stop for constant measuring force.

395-371-32

SPECIFICATIONS

Inch / Metric

Order No.	Range (in)	Resolution	Accuracy* (in)	øD (in)
Digimatic				
395-371-32	0 - 1	0.00005 in/ 0.001 mm	±0.0001	ø0.59
395-372-32	1 - 2			
395-373-32	2 - 3			ø0.75
395-374-32	3 - 4		±0.00015	ø0.79

Metric

Order No.	Range (mm)	Resolution (mm)	Accuracy* (µm)	øD (mm)
Digimatic				
395-271-32	0 - 25	0.001	±2	ø15
395-272-32	25 - 50			
395-273-32	50 - 75			ø19
395-274-32	75 - 100		±3	ø20

- Power source: SR44 battery (1 pc.), **938882** included as standard

* E_{MPE} (ISO 3611:2023 and ASME B89.1.13-2013)

115-253

295-253

SPECIFICATIONS

Inch

Order No.	Range (in)	Graduation (in)	Accuracy* (in)	øD (in)
Analog				
115-253	0 - 1	0.0001	±0.00015	ø0.40
115-242	1 - 2	0.001		ø0.44
115-243	2 - 3			ø0.67
Mechanical counter model				
295-253	0 - 1	0.0001	±0.00015	ø0.40

* E_{MPE} (ISO 3611:2023 and ASME B89.1.13-2013)

Metric

Order No.	Range (mm)	Graduation (mm)	Accuracy* (µm)	øD (mm)
Analog				
115-201	0 - 15	0.01	±3	ø5.5
115-215	0 - 25			ø10
115-216	25 - 50			ø11
115-217	50 - 75			ø17
115-218	75 - 100		±4	ø18
Mechanical counter model				
295-215	0 - 25	0.01	±3	ø10

DIMENSIONS

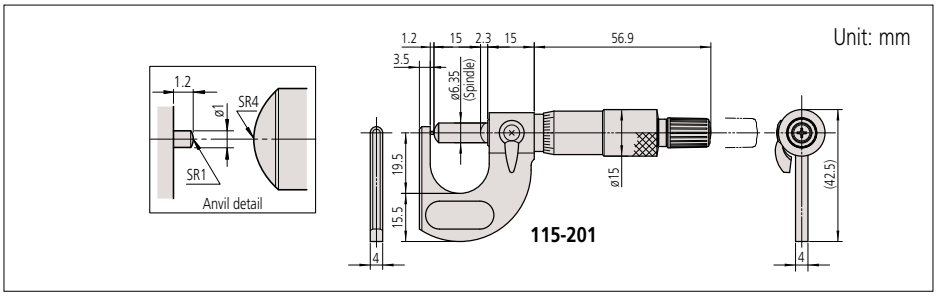

MeasurLink ENABLED
Data Management Software by Mitutoyo

U-WAVE fit

IP65

Dust- and Water-Protected
TÜVRheinland CERTIFIED
www.tuv.com ID 0000040191

Applicable models: **series 395**

Measurement Example

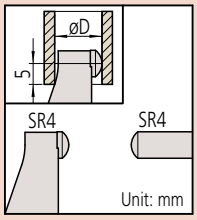

Other than **115-201**

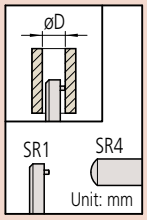

115-201

Optional Output Devices

Order No.	Description
Wired	
264-020	USB Input tool (**IT-020U**)
- 05CZA662	Connecting Cable (**1m**)
- 05CZA663	Connecting Cable (**2m**)
06AFM380B	USB Input Tool Direct (**2m**)
Wireless	
264-622	Transmitter (**IP67**)
264-626	Transmitter (**IP67, Bluetooth**)
264-623	Transmitter (**Buzzer**)
264-627	Transmitter (**Buzzer, Bluetooth**)
- 02AZF310	Connecting Unit (**Adapter**)
- 02AZE140B	Connecting Cable (**foot switch compatible**)

Note: Model uses connector type "B"
For additional accessories refer to pages B-70 to B-76

Find a Distributor

MeasurLink ENABLED
Data Management Software by Mitutoyo
U-WAVE fit

IP65
Dust- and Water-Protected
TÜVRheinland CERTIFIED
www.tuv.com ID 0000040191

Applicable models: **series 395**

Measurement Example

Type A (pin) | Type B (spherical)

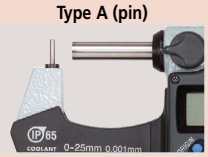

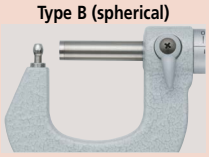

Type C (cylindrical) | Type D (cylindrical)

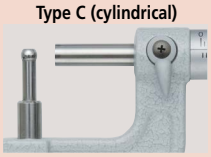

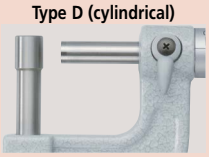

Optional Output Devices

Order No.	Description
Wired	
264-020	USB Input tool (**IT-020U**)
- 05CZA662	Connecting Cable (**1m**)
- 05CZA663	Connecting Cable (**2m**)
06AFM380B	USB Input Tool Direct (**2m**)
Wireless	
264-622	Transmitter (**IP67**)
264-626	Transmitter (**IP67, Bluetooth**)
264-623	Transmitter (**Buzzer**)
264-627	Transmitter (**Buzzer, Bluetooth**)
- 02AZF310	Connecting Unit (**Adapter**)
- 02AZE140B	Connecting Cable (**foot switch compatible**)

Note: Model uses connector type "B"
For additional accessories refer to pages B-70 to B-76

Anvil Shape

Unit: mm

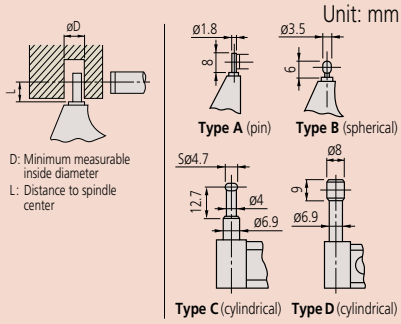

Anvil	øD	L
Type A	ø2.0	4
Type B	ø3.6	
Type C	ø4.8	12
Type D	ø8.2	22

Tube Micrometers
SERIES 395, 115, 295 — Spherical and Cylindrical Anvil Type

- Designed to measure the wall thickness of various tubing.
- Spindle face: Carbide tipped
- IP65 water/dust protection (series 395).
- Equipped with Ratchet Stop for constant measuring force.

395-363-32

SPECIFICATIONS

Inch / Metric

Order No.	Range (in)	Resolution	Accuracy* (in)	Remarks
Digimatic				
395-362-32	0 - 1	0.00005 in / 0.001 mm	±0.00015	Type B
395-363-32				Type C
395-364-32				Type D

Metric

Order No.	Range (mm)	Resolution (mm)	Accuracy* (µm)	Remarks
Digimatic				
395-261-32	0 - 25	0.001	±3	Type A
395-262-32				Type B
395-263-32				Type C
395-264-32				Type D

- Power source: SR44 battery (1 pc.), **938882** included as standard

* E_{MPE} (ISO 3611:2023 and ASME B89.1.13-2013)

DIMENSIONS

Unit: mm

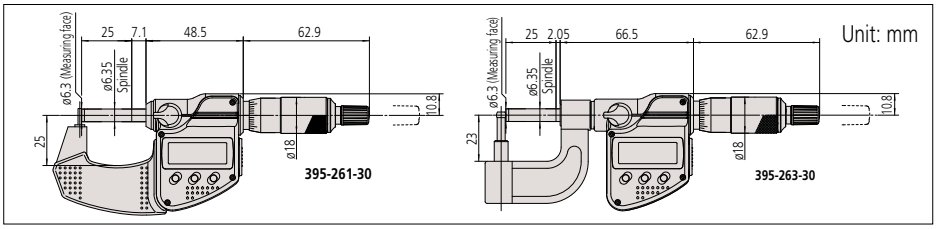

SPECIFICATIONS

Inch

Order No.	Range (in)	Graduation (in)	Accuracy* (in)	Remarks
Analog				
115-305	0 - 1	0.001	±0.00015	Type A
115-313		0.0001		Type C
115-314				Type D

* E_{MPE} (ISO 3611:2023 and ASME B89.1.13-2013)

Metric

Order No.	Range (mm)	Graduation (mm)	Accuracy* (µm)	Remarks
Analog				
115-302	0 - 25	0.01	±3	Type A
115-308				Type B
115-315				Type C
115-316				Type D
115-303	25 - 50			Type A
115-309				Type B

DIMENSIONS

Unit: mm

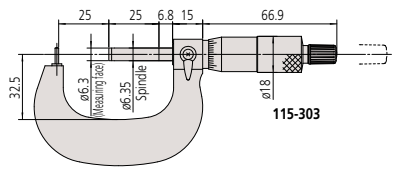

Mitutoyo

Micrometers

Spline Micrometers
SERIES 331

- The anvil and spindle have a small diameter for measuring splined shafts, slots and keyways.
- IP65 water/dust protection.
- Measuring faces: Carbide tipped.
- Equipped with Ratchet Stop for constant measuring force.

331-351-32

SPECIFICATIONS

Inch / Metric

Order No.	Range (in)	Resolution	Accuracy* (in)	Flatness (in)	Parallelism (in)	Measuring face
Digimatic						
331-351-32	0 - 1	0.00005 in / 0.001 mm	±0.0001	0.000012	0.00008	Type A
331-361-32						Type B
331-352-32	1 - 2					Type A
331-362-32						Type B
331-353-32	2 - 3					Type A
331-363-32						Type B
331-354-32	3 - 4		±0.00015		0.00012	Type A
331-364-30						Type B

Metric

Order No.	Range (mm)	Resolution (mm)	Accuracy* (µm)	Flatness (µm)	Parallelism (µm)	Measuring face
Digimatic						
331-251-32	0 - 25	0.001	±2	0.3	2	Type A
331-261-32						Type B
331-252-32	25 - 50					Type A
331-262-30						Type B
331-253-32	50 - 75					Type A
331-263-32						Type B
331-254-30	75 - 100		±3		3	Type A
331-264-30						Type B

- Power source: SR44 battery (1 pc.), **938882** included as standard

* *E*MPE (ISO 3611:2023 and ASME B89.1.13-2013)

DIMENSIONS

Digimatic models
Models up to 75 mm measuring range

Unit: mm

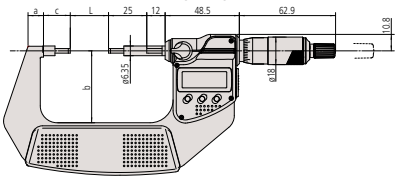

Digimatic models
Models over 75 mm measuring range

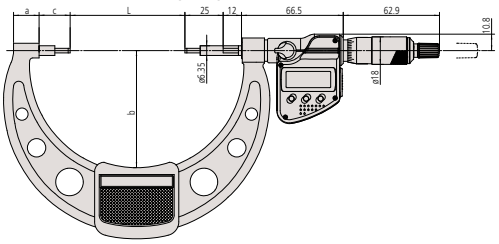

Range	a	b	c
0 - 1 in	7.3	32.5	17.5
1 - 2 in	10.1	47	
2 - 3 in	11.5	60	
3 - 4 in	16.7	76	20.3

MeasurLink ENABLED
Data Management Software by Mitutoyo

U-WAVE fit

IP65

Dust- and Water-Protected
TÜVRheinland CERTIFIED
www.tuv.com ID 0000040191

Measurement Example

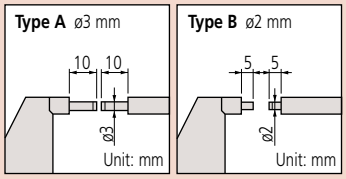

Optional Output Devices

Order No.	Description
Wired	
264-020	USB Input tool (**IT-020U**)
- 05CZA662	Connecting Cable (**1m**)
- 05CZA663	Connecting Cable (**2m**)
06AFM380B	USB Input Tool Direct (**2m**)
Wireless	
264-622	Transmitter (**IP67**)
264-626	Transmitter (**IP67, Bluetooth**)
264-623	Transmitter (**Buzzer**)
264-627	Transmitter (**Buzzer, Bluetooth**)
- 02AZF310	Connecting Unit (**Adapter**)
- 02AZE140B	Connecting Cable (**foot switch compatible**)

Note: Model uses connector type "B"
For additional accessories refer to pages B-70 to B-76

Spline Micrometers
SERIES 111, 131

- The anvil and spindle have a small diameter for measuring splined shafts, slots and keyways.
- Measuring faces: Carbide tipped.
- Equipped with Ratchet Stop for constant measuring force.

111-166

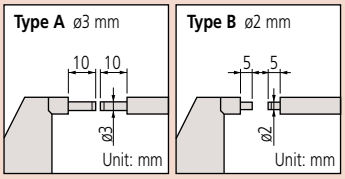

SPECIFICATIONS

Inch

Order No.	Range (in)	Graduation (in)	Accuracy* (in)	Flatness (in)	Parallelism (in)	Measuring face
Analog						
111-166	0 - 1	0.0001	±0.00015	0.000012	0.00008	Type A
Mechanical counter model						
131-166	0 - 1	0.0001	±0.00015	0.000012	0.00008	Type A

Metric

Order No.	Range (mm)	Graduation (mm)	Accuracy* (µm)	Flatness (µm)	Parallelism (µm)	Measuring face
Analog						
111-215	0 - 25	0.01	±3	0.3	2	Type B
111-115	0 - 25					Type A
111-116	25 - 50					
111-117	50 - 75					
111-118	75 - 100		±4		3	
111-119	100 - 125					
111-120	125 - 150					
111-121	150 - 175		±5			
111-122	175 - 200				4	
111-123	200 - 225					
111-124	225 - 250		±6			
111-125	250 - 275					
111-126	270 - 300				5	
Mechanical counter model						
131-115	0 - 25	0.01	±3	0.3	2	Type A

* E_{MPE} (ISO 3611:2023 and ASME B89.1.13-2013)

DIMENSIONS

Analog models

Unit: mm

Models up to 300 mm measuring range

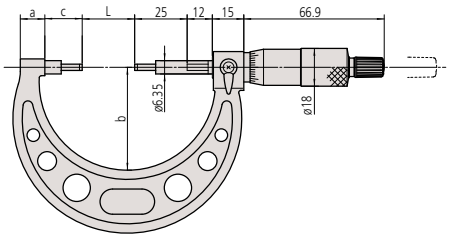

Order No.	L	a	b	c
111-215	0	10	38	17.5
111-115				
111-116	25	12	49	
111-117	50	14	60	
111-118	75	16.7	79	20.3
111-119	100	18.8	94	20.7
111-120	125	19.1	106	21.1
111-121	150	18.2	118	21.3
111-122	175	16.8	130	21.7
111-123	200	18	143	20.5
111-124	225		156	21.5
111-125	250		169	
111-126	275		181	

Where to Buy

Micrometers

Point Micrometers SERIES 342

- Pointed spindle and anvil for measuring the web thickness of drills, small grooves, keyways, and other hard-to-reach dimensions.
- The measuring points (carbide tipped) have approximately 0.3 mm radius.
- Measuring faces: Carbide tipped.
- IP65 water/dust protection
- Equipped with Ratchet Stop for constant measuring force.

342-351-32

SPECIFICATIONS

Inch / Metric

Order No.	Range (in)	Resolution (in)	Accuracy* (in)	Point
Digimatic (with carbide tip)				
342-351-32	0 - 1	0.00005 in/ 0.001 mm	±0.0001	15°
342-361-32				30°
342-353-32	1 - 2			15°
342-362-32				30°
342-353-32	2 - 3			15°
342-363-30				30°
342-354-32	3 - 4		±0.00015	15°
342-364-32				30°

Metric

Order No.	Range (mm)	Resolution (mm)	Accuracy* (µm)	Point
Digimatic (with carbide tip)				
342-251-32	0 - 25	0.001	±2	15°
342-261-32				30°
342-252-32	25 - 50			15°
342-262-32				30°
342-253-32	50 - 75			15°
342-263-30				30°
342-254-32	75 - 100		±3	15°
342-264-30				30°

- Power source: SR44 battery (1 pc.), **938882** included as standard

* E_{MPE} (ISO 3611:2023 and ASME B89.1.13-2013)

DIMENSIONS

Digimatic models up to 75 mm measuring range

Unit: mm

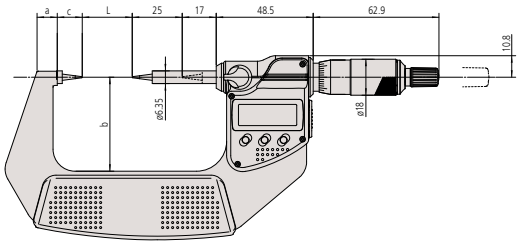

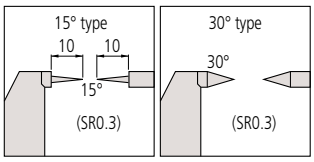

Digimatic models over 75 mm measuring range

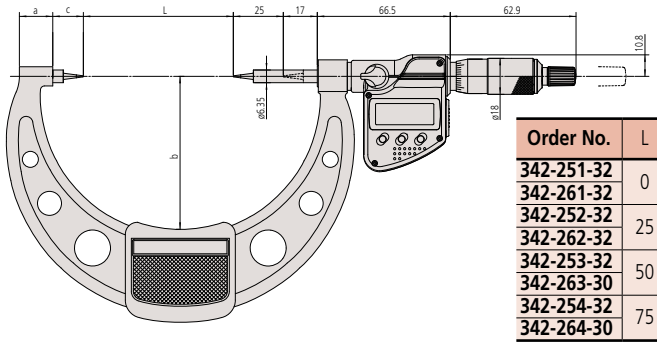

Order No.	L	a	b	c	Frame thickness*
342-251-32	0	7.3	32.5	12.5	(11.2)
342-261-32					
342-252-32	25	10.1	47		(12.8)
342-262-32					
342-253-32	50	11.5	60		
342-263-30					
342-254-32	75	16.7	76	15.3	(20.8)
342-264-30					

* Digimatic type: thickness over heat shield

MeasurLink ENABLED
Data Management Software by Mitutoyo

U-WAVE fit

IP65

Dust- and Water-Protected
TÜVRheinland CERTIFIED
www.tuv.com ID 0000040191

Measurement Example

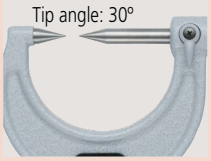

Optional Output Devices

Order No.	Description
Wired	
264-020	USB Input tool (**IT-020U**)
- 05CZA662	Connecting Cable (**1m**)
- 05CZA663	Connecting Cable (**2m**)
06AFM380B	USB Input Tool Direct (**2m**)
Wireless	
264-622	Transmitter (**IP67**)
264-626	Transmitter (**IP67, Bluetooth**)
264-623	Transmitter (**Buzzer**)
264-627	Transmitter (**Buzzer, Bluetooth**)
- 02AZF310	Connecting Unit (**Adapter**)
- 02AZE140B	Connecting Cable (**foot switch compatible**)

Note: Model uses connector type "B"
For additional accessories refer to pages B-70 to B-76

Point Micrometers SERIES 112, 142

- Pointed spindle and anvil for measuring the web thickness of drills, small grooves, keyways, and other hard-to-reach dimensions.
- The measuring points have approximately 0.3 mm radius.
- Carbide measuring tips are also available.
- Equipped with Ratchet Stop for constant measuring force.

112-225

142-225

SPECIFICATIONS

Inch

Order No.	Range (in)	Graduation (in)	Accuracy* (in)	Point
Analog				
112-177	0 - 1	0.001	±0.00015	15°
112-225				30°
112-178	1 - 2			15°
112-226				30°
Analog (With carbide tip)				
112-189	0 - 1		±0.00015	15°
112-237				30°
112-190	1 - 2			15°
112-238				30°
112-191	2 - 3			15°
Mechanical counter model				
142-177	0 - 1		±0.00015	15°
142-225				30°

* EMPE (ISO 3611:2023 and ASME B89.1.13-2013)

Metric

Order No.	Range (mm)	Graduation (mm)	Accuracy* (µm)	Point
Analog				
112-153	0 - 25	0.01	±3	15°
112-201				30°
112-154	25 - 50			15°
112-202				30°
112-155	50 - 75			15°
112-203				30°
112-156	75 - 100		±4	15°
112-204				30°
Analog (With carbide tip)				
112-165	0 - 25	0.01	±3	15°
112-213				30°
112-166	25 - 50			15°
112-214				30°
112-167	50 - 75			15°
112-215				30°
112-168	75 - 100		±4	15°
112-216				30°
Mechanical counter model				
142-153	0 - 25	0.01	±3	15°
142-201				30°

DIMENSIONS

Analog models measuring range

Unit: mm

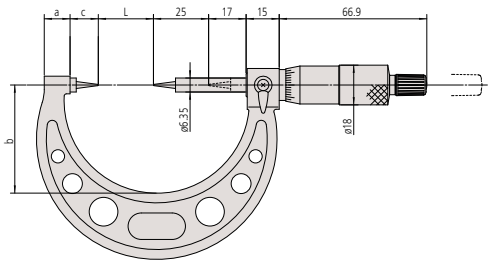

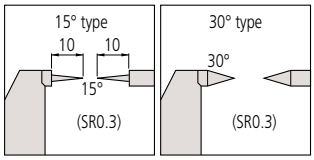

Order No.	L	a	b	c	Frame thickness
112-153	0	10	38	12.5	(9)
112-154	25	12	49		(10)
112-155	50	14	60		(11)
112-156	75	16.7	79	15.3	(13)

Get a Quote

Micrometers

MeasurLink ENABLED
Data Management Software by Mitutoyo
U-WAVE fit

B

V-Anvil Micrometers
SERIES 314 — 3 Flutes

- Measures the outside diameter of cutting tools (such as taps, reamers, end mills) with an odd number of flutes.
- Carbide tipped spindle.
- Equipped with Ratchet Stop for constant measuring force.

314-351-32

314-353-30

SPECIFICATIONS

Inch / Metric For 3-flute cutting tools

Order No.	Range (in)	Resolution (in)	Accuracy* (in)	Anvil	Remarks
Digimatic					
314-351-32	0.05 - 0.6	0.00005 in/ 0.001 mm	±0.0002	60°	w/groove
314-361-30					—
314-352-32	0.4 - 1				w/groove
314-362-30					—
314-353-30	1 - 1.6		±0.00025		—

Metric For 3-flute cutting tools

Order No.	Range (mm)	Resolution (mm)	Accuracy* (µm)	Anvil	Remarks
Digimatic					
314-251-30	1 - 15	0.001	±4	60°	w/groove
314-261-32					—
314-252-32	10 - 25				w/groove
314-262-30					—
314-253-30	25 - 40		±5		—

* E_{MPE} (ISO 3611:2023 and ASME B89.1.13-2013)

Measurement Example

Pitch Diameter Measurement of Tap by Single-Wire Method

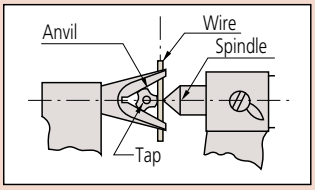

Optional Output Devices

Order No.	Description
Wired	
264-020	USB Input tool (**IT-020U**)
- 05CZA662	Connecting Cable (**1m**)
- 05CZA663	Connecting Cable (**2m**)
06AFM380B	USB Input Tool Direct (**2m**)
Wireless	
264-622	Transmitter (**IP67**)
264-626	Transmitter (**IP67, Bluetooth**)
264-623	Transmitter (**Buzzer**)
264-627	Transmitter (**Buzzer, Bluetooth**)
- 02AZF310	Connecting Unit (**Adapter**)
- 02AZE140B	Connecting Cable (**foot switch compatible**)

Note: Model uses connector type "B"
For additional accessories refer to pages B-70 to B-76

V-Anvil Micrometers
SERIES 114 — 3 Flutes and 5 Flutes

- Measures the outside diameter of cutting tools (such as taps, reamers, end mills) with an odd number of flutes.
- Equipped with Ratchet Stop for constant measuring force.

114-135

SPECIFICATIONS

Inch For 3-flute cutting tools

Order No.	Range (in)	Graduation (in)	Accuracy* (in)	Anvil	Remarks
Analog - Anvil, Spindle (with carbide tip)					
114-202	0.09 - 1	0.0001	±0.0002	60°	—
Analog - Spindle (with carbide tip)					
114-163	0.05 - 0.6	0.001	±0.0002	60°	—
114-113	1 - 1.6		±0.00025		—
114-114	1.6 - 2.2		±0.0003		—

Metric For 3-flute cutting tools

Order No.	Range (mm)	Graduation (mm)	Accuracy* (µm)	Anvil	Remarks
Analog - Anvil, Spindle (with carbide tip)					
114-204	2.3 - 25	0.01	±4	60°	—
Analog - Spindle (with carbide tip)					
114-101	1 - 15	0.01	±4	60°	w/groove
114-161					—
114-102	10 - 25				w/groove
114-162					—
114-103	25 - 40		±5		—
114-104	40 - 55		±6		—
114-105	55 - 70				—
114-106	70 - 85		±7		—
114-107	85 - 100				—
114-108	100 - 115		±8		—
114-109	115 - 130		±9		—
114-110	130 - 145				—

Inch For 5-flute cutting tools

Order No.	Range (in)	Graduation (in)	Accuracy* (in)	Anvil	Remarks
Analog - Anvil, Spindle (with carbide tip)					
114-135	0.09 - 1	0.0001	±0.0002	108°	—

* E_{MPE} (ISO 3611:2023 and ASME B89.1.13-2013)

Metric For 5-flute cutting tools

Order No.	Range (mm)	Graduation (mm)	Accuracy* (µm)	Anvil	Remarks
Analog - Anvil, Spindle (with carbide tip)					
114-137	2.3 - 25	0.01	±4	108°	—
Analog - Spindle (with carbide tip)					
114-121	5 - 25	0.01	±4	108°	w/groove
114-165					—
114-122	25 - 45		±5		—
114-123	45 - 65		±6		—
114-124	65 - 85		±7		—

DIMENSIONS

Unit: mm

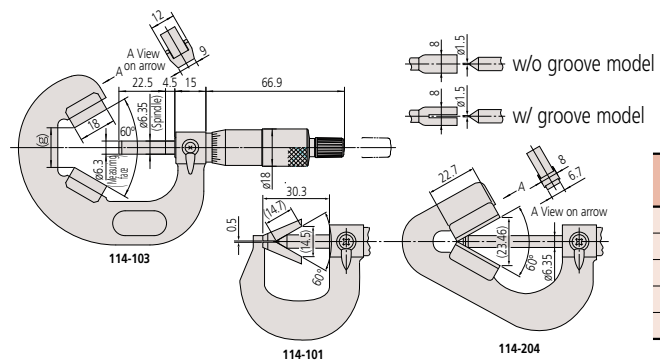

For 3-flute cutting tools

Range (mm)	(g)
10 - 25	6.2
25 - 40	19.14
40 - 55	32.13
55 - 70	45.12
70 - 85	58.11

Need Support?

Micrometers

Blade Micrometers
SERIES 422 — Non-rotating Spindle Type

- The anvil and the spindle have a blade for measuring the groove diameter of shafts, keyways and other hard-to-reach areas.
- Carbide-tipped measuring faces are available.
- Non-rotating spindle type.
- Equipped with Ratchet Stop for constant measuring force.

B

Digimatic
422-330-32

Quickmike type
422-421-22

SPECIFICATIONS

Inch / Metric

Order No.	Range (in)	Resolution	Accuracy* (in)	Parallelism (in)	Remark
Digimatic					
422-330-32	0 - 1	0.00005 in/ 0.001 mm	±0.00015	0.00015	Type A
422-360-32					Type B
422-370-32					Type C
422-371-32					Type D
422-331-32	1 - 2				Type A
422-361-32					Type B
422-332-32	2 - 3				Type A
422-333-32	3 - 4		±0.0002	0.0002	Type A

Metric

Order No.	Range (mm)	Resolution (mm)	Accuracy* (µm)	Parallelism (µm)	Remark
Digimatic					
422-230-32	0 - 25	0.001	±3	3	Type A
422-260-32					Type B
422-270-30					Type C
422-271-30					Type D
422-231-30	25 - 50				Type A
422-261-32					Type B
422-232-32	50 - 75				Type A
422-271-30	75 - 100		±4	4	Type A

Inch / Metric Quickmike type

Order No.	Range (in)	Resolution	Accuracy* (in)	Parallelism (in)	Remark
Digimatic					
422-421-22	0 - 1.2	0.00005 in/ 0.001 mm	±0.00015	0.00015	Type A
422-422-22	1 - 2.2				

Metric Quickmike type

Order No.	Range (mm)	Resolution (mm)	Accuracy* (µm)	Parallelism (µm)	Remark
Digimatic					
422-411-22	0 - 30	0.001	±3	3	Type A
422-412-22	25 - 55				

- Power source: SR44 battery (1 pc.), **938882** included as standard

* E_{MPE} (ISO 3611:2023 and ASME B89.1.13-2013)

MeasurLink ENABLED
Data Management Software by Mitutoyo

U-WAVE fit

IP65

Dust- and Water-Protected
TÜVRheinland CERTIFIED
www.tuv.com ID 0000040191

ABSOLUTE™

Applicable models:
series 422 Quickmike type

Measurement example

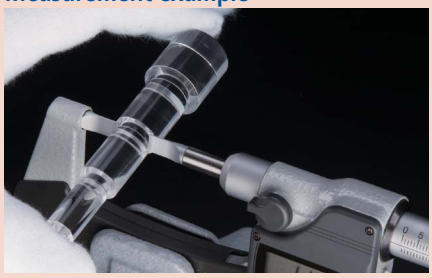

Type and dimensions

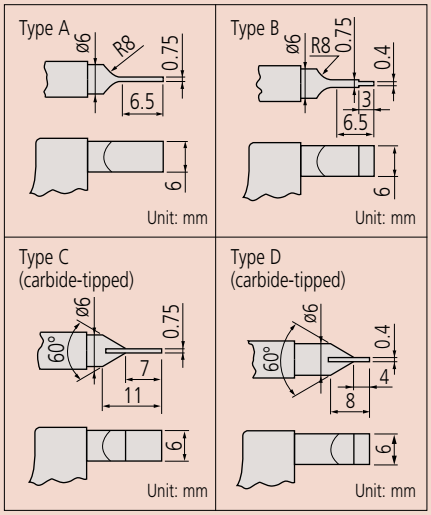

Optional Output Devices

Order No.	Description
Wired	
264-020	USB Input tool (**IT-020U**)
- 05CZA662	Connecting Cable (**1m**)
- 05CZA663	Connecting Cable (**2m**)
06AFM380B	USB Input Tool Direct (**2m**)
Wireless	
264-622	Transmitter (**IP67**)
264-626	Transmitter (**IP67, Bluetooth**)
264-623	Transmitter (**Buzzer**)
264-627	Transmitter (**Buzzer, Bluetooth**)
- 02AZF310	Connecting Unit (**Adapter**)*1
- 02AZD790B	Connecting Cable
- 02AZE140B	Connecting Cable (**foot switch compatible**)

Note: Model uses connector type "B"
*1 For Coolant Proof models ONLY
For additional accessories refer to pages B-70 to B-76

Deviation Between the Anvil and Spindle in the Vertical Direction

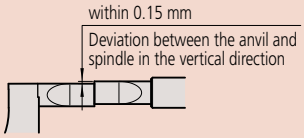

Deviation of 0.15 mm or less* is guaranteed between the anvil and spindle in the vertical direction.

* When the measuring range is 0 to 25 mm

DIMENSIONS

Unit: mm

Digimatic models up to 50 mm measuring range

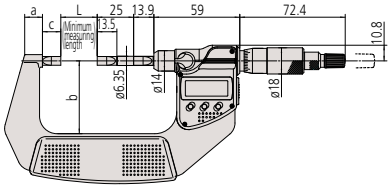

Digimatic models over 50 mm to 100 mm measuring range

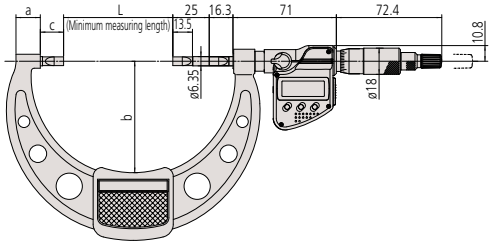

Quickmike type

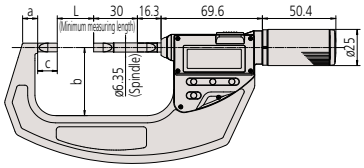

Order No.	L	a	b	C
422-230-32	0	11	31	12.5
422-231-30	25	12.2	50	12.6
422-232-32	50	14.6	57	13
422-233-30	75	16.7	76	16
422-260-32	0	11	31	12.5
422-261-32	25	12.2	50	12.6
422-270-30	0	11	31	12.5
422-271-30				
422-411-22		8.5	36	13.5
422-412-22	25	10.3	47	

Need Service?

Micrometers

Blade Micrometers
SERIES 122 — Non-rotating Spindle Type

- The anvil and the spindle have a blade for measuring the groove diameter of shafts, keyways and other hard-to-reach areas.
- Non-rotating spindle type.
- Carbide-tipped measuring faces are available.
- Equipped with Ratchet Stop for constant measuring force.

122-125-10

Type and Dimensions

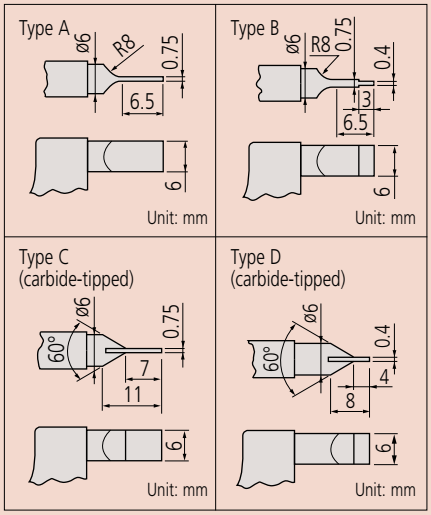

SPECIFICATIONS

Inch

Order No.	Range (in)	Graduation (in)	Accuracy* (in)	Parallelism (in)	Remark
Analog					
122-125-10	0 - 1	0.0001	±0.00015	0.00015	Type A
122-135-10					Type B
122-151-10					Type D
122-126-10	1 - 2				Type A
122-127-10	2 - 3				
122-128-10	3 - 4		±0.0002	0.0002	

Metric

Order No.	Range (mm)	Graduation (mm)	Accuracy* (µm)	Parallelism (µm)	Remark
Analog					
122-101-10	0 - 25	0.01	±3	3	Type A
122-111-10					Type B
122-161-10					Type C
122-141-10					Type D
122-102-10	25 - 50				Type A
122-112-10					Type B
122-162-10					Type C
122-142-10					Type D
122-103-10	50 - 75				Type A
122-104-10	75 - 100		±4	4	
122-105-10	100 - 125			5	
122-106-10	125 - 150				
122-107-10	150 - 175		±5		
122-108-10	175 - 200				
122-109-10	200 - 225			6	
122-110-10	225 - 250		±6		
122-115-10	250 - 275				
122-116-10	275 - 300				

* E_{MPE} (ISO 3611:2023 and ASME B89.1.13-2013)

DIMENSIONS

Analog models up to 25 mm measuring range

Unit: mm

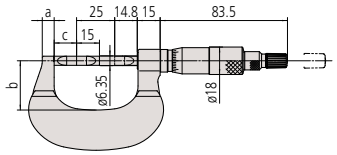

Analog models over 25 mm to 300 mm measuring range

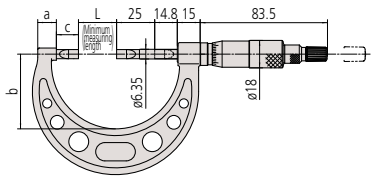

Order No.	L	a	b	C
122-101-10	0	7.8	32	15
122-102-10	25	12.2	49	14.5
122-103-10	50	14.6	60	
122-104-10	75	16.7	79	17.5
122-105-10	100	18.8	94	17.9
122-106-10	125	19.1	106	18.3
122-107-10	150	18.2	118	18.5
122-108-10	175	16.8	130	18.9
122-109-10	200	18	143	17.7
122-110-10	225		156	18.7
122-115-10	250		169	
122-116-10	275		181	

Need Calibration?

Measurement Example

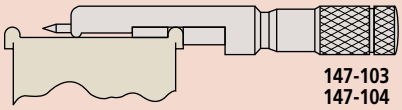

147-103
147-104

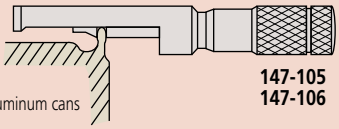

147-105
147-106

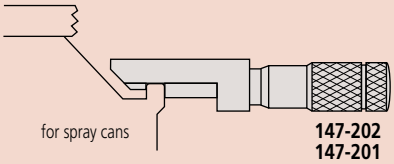

147-202
147-201

Measurement Example

Can Seam Micrometers SERIES 147

- Measures the width, height, and depth of can seams.

147-104

SPECIFICATIONS

Inch

Order No.	Range (in)	Graduation (in)	Accuracy* (in)	Remarks
147-104*1	0 - 0.5	0.001	±0.00015	—
147-106				for aluminum cans
147-201				for spray cans

Metric

Order No.	Range (mm)	Graduation (mm)	Accuracy* (µm)	Remarks
147-103*1	0 - 13	0.01	±3	—
147-105				for aluminum cans
147-202				for spray cans

* E_{MPE} (ISO 3611:2023 and ASME B89.1.13-2013)
*1 For depth measurements up to .2 in / 5 mm.

DIMENSIONS

Unit: mm

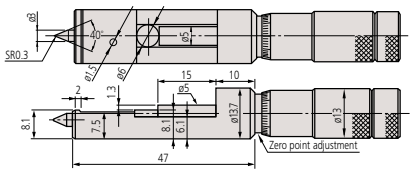

147-103, 147-104

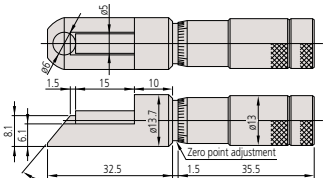

147-202, 147-201

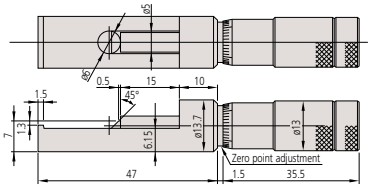

147-105, 147-106

Hub Micrometers SERIES 147

- Measures hub thickness and shoulders inside a bore.
- Measuring faces: Carbide tipped.

147-351

- Equipped with Ratchet Stop for constant measuring force.

SPECIFICATIONS

Inch

Order No.	Range (in)	Graduation (in)	Accuracy* (in)	Flatness (in)	Parallelism (in)
147-351	0 - 1	0.001	±0.0001	0.000024	0.00012
147-352	1 - 2				
147-353	2 - 3				
147-354	3 - 4		±0.00015		

Metric

Order No.	Range (mm)	Graduation (mm)	Accuracy* (µm)	Flatness (µm)	Parallelism (µm)
147-301	0 - 25	0.01	±2	0.6	3
147-302	25 - 50				
147-303	50 - 75				
147-304	75 - 100		±3		

* E_{MPE} (ISO 3611:2023 and ASME B89.1.13-2013)

DIMENSIONS

Unit: mm

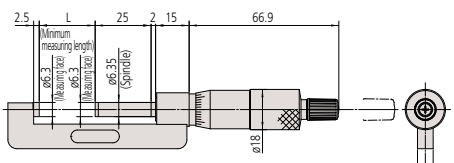

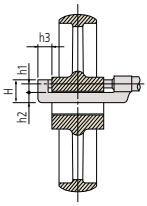

Range (mm)	h_1	h_2	h_3	H	L
0 - 25	6	8.5	13.5	17.5	0
25 - 50	6.5	11	14	20.5	25
50 - 75			13		50
75 - 100					75

Micrometers

Crimp Height Micrometers SERIES 342

- Measures the height of crimp contacts
- Point spindle
- IP65 water/dust protection
- Equipped with Ratchet Stop for constant measuring force
- With SPC output

B

Digimatic
342-371-32

Quickmike type
342-451-20

SPECIFICATIONS

Inch / Metric

Order No.	Range (in)	Resolution	Accuracy* (in)
Digimatic			
342-371-32	0 - 0.8	0.00005 in/ 0.001 mm	±0.00015

Metric

Order No.	Range (mm)	Resolution (mm)	Accuracy* (µm)
Digimatic			
342-271-30	0 - 20	0.001	±3
Quickmike			
342-451-20	0 - 15	0.001	±3

- Power source: SR44 battery (1 pc.), **938882** included as standard

* E_{MPE} (ISO 3611:2023 and ASME B89.1.13-2013)

DIMENSIONS

342-271-30

Unit: mm

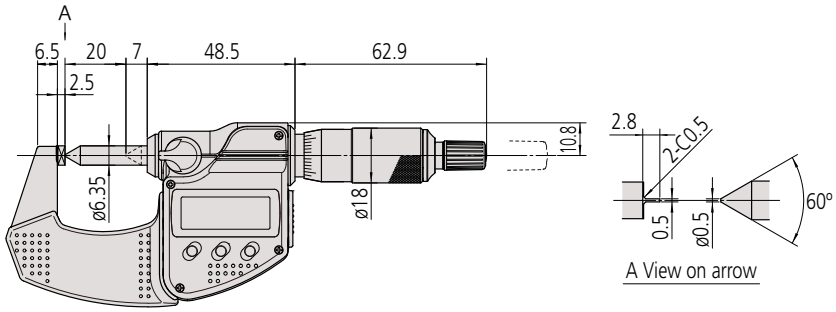

MeasurLink ENABLED
Data Management Software by Mitutoyo

U-WAVE fit

IP65

TÜVRheinland CERTIFIED Dust- and Water-Protected www.tuv.com ID 0000040191

TÜVRheinland CERTIFIED Dust- and Water-Protected www.tuv.com ID 0000063013

ABSOLUTE™

Measurement Example

Anvil and Spindel Tip Detail

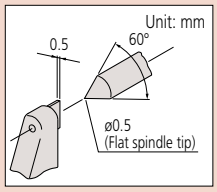

342-271-30, 342-371-32

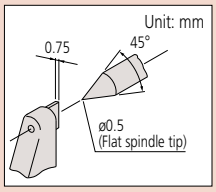

342-451-20

Optional Output Devices

Order No.	Description
Wired	
264-020	USB Input tool (**IT-020U**)
- 05CZA662	Connecting Cable (**1m**)
- 05CZA663	Connecting Cable (**2m**)
06AFM380B	USB Input Tool Direct (**2m**)
Wireless	
264-622	Transmitter (**IP67**)
264-626	Transmitter (**IP67, Bluetooth**)
264-623	Transmitter (**Buzzer**)
264-627	Transmitter (**Buzzer, Bluetooth**)
- 02AZF310	Connecting Unit (**Adapter**)*1
- 02AZD790B	Connecting Cable
- 02AZE140B	Connecting Cable (**foot switch compatible**)

Note: Model uses connector type "B"
*1 For Coolant Proof models ONLY
For additional accessories refer to pages B-70 to B-76

Crimp Height Micrometers SERIES 112,142

- Measures the height of crimp contacts.
- Point spindle
- Equipped with Ratchet Stop for constant measuring force

112-401

142-402

Anvil and Spindle Tip Detail

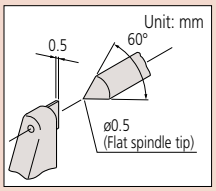

112-401

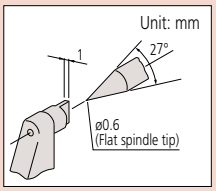

142-402, 142-403

SPECIFICATIONS

Metric

Order No.	Range (mm)	Graduation (mm)	Accuracy* (µm)
Mechanical counter model			
142-402	0 - 25	0.01	±3
142-403		0.001	

Metric

Order No.	Range (mm)	Graduation (mm)	Accuracy* (µm)
Analog			
112-401	0 - 25	0.01	±3

* E_{MPE} (ISO 3611:2023 and ASME B89.1.13-2013)

Find a Distributor

Micrometers

B

"Uni-Mike"
SERIES 317, 117 — Interchangeable Anvil Type

- Measures tubing thickness, shoulder-edge distance, rivet head height, etc., with interchangeable anvils (flat anvil, rod anvil, V-anvil).
- IP65 water/dust protection (**series 317**).
- Equipped with Ratchet Stop for constant measuring force.

317-351-32

SPECIFICATIONS

Inch/Metric

Order No.	Range (in)	Resolution	Flatness (in)	Parallelism (in)
Digimatic				
317-351-32	0 - 1	0.00005 in/0.001 mm	0.000024 (Spindle face)/ 0.00008 (Anvil face)	0.00012
317-352-32	1 - 2			

Metric

Order No.	Range (mm)	Resolution (mm)	Flatness (µm)	Parallelism (µm)
Digimatic				
317-251-32	0 - 25	0.001	0.6 (Spindle face)/ 2 (Anvil face)	3
317-252-30	25 - 50			

- Power source: SR44 battery (1 pc.), **938882** included as standard

117-107

SPECIFICATIONS

Inch

Order No.	Range (in)	Graduation (in)	Flatness (in)	Parallelism (in)
Analog				
117-107	0 - 1	0.0001	0.000024 (Spindle face)/ 0.00008 (Anvil face)	0.00012
117-108	1 - 2			

Metric

Order No.	Range (mm)	Graduation (mm)	Flatness (µm)	Parallelism (µm)
Analog				
117-101	0 - 25	0.01	0.6 (Spindle face)/ 2 (Anvil face)	3
117-102	25 - 50			

DIMENSIONS

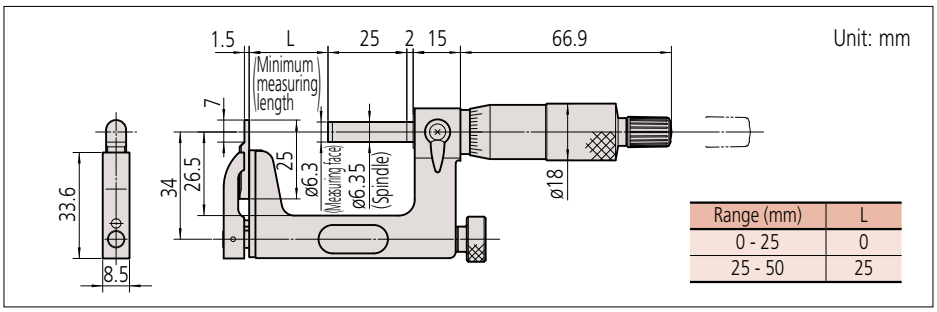

Range (mm)	L
0 - 25	0
25 - 50	25

MeasurLink ENABLED
Data Management Software by Mitutoyo

U-WAVE fit

IP65

Dust- and Water-Protected
TÜVRheinland CERTIFIED
www.tuv.com ID 0000040191

Applicable models: **series 317**

Measurement Example

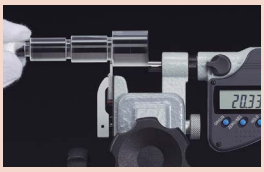

Shown with optional round base: **950758**

Optional Output Devices

Order No.	Description
Wired	
264-020	USB Input tool (**IT-020U**)
- 05CZA662	Connecting Cable (**1m**)
- 05CZA663	Connecting Cable (**2m**)
06AFM380B	USB Input Tool Direct (**2m**)
Wireless	
264-622	Transmitter (**IP67**)
264-626	Transmitter (**IP67, Bluetooth**)
264-623	Transmitter (**Buzzer**)
264-627	Transmitter (**Buzzer, Bluetooth**)
- 02AZF310	Connecting Unit (**Adapter**)
- 02AZE140B	Connecting Cable (**foot switch compatible**)

Note: Model uses connector type "B"
For additional accessories refer to pages B-70 to B-76

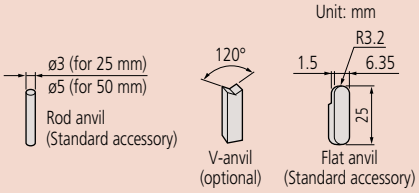

Order No.	Item
201216	Flat anvil (standard accessory)
201217	Rod anvil (standard accessory for **117-101**/ **117-107**/**317-251-32**/**317-351-32**)
201379	Rod anvil (standard accessory for **117-102**/ **117-108**/**317-252-30**/**317-352-32**)
201218	V-anvil (optional)
950758	Round Base for 0 - 1 in /0-25 mm ø58×14.2 mm (optional)

Indicator Type Micrometers SERIES 107

- Designed to mount an indicator for direct Go/±No-go judgment for mass-produced parts.
- Anvil retracting trigger for quick measurement.
- Measuring faces: Carbide tipped.
- Various kinds of indicators and other gages* are available depending on the measurement type (accuracy required, measuring range, etc.).
- Anvil stroke: 3 mm

* Only stems of ø8 diameter are supported, but even these may not be supported by some models. Please contact the Mitutoyo Customer Support Center or visit the nearest M³ Solution Center for detailed specifications.

Measurement Example

Typical Indicator Choice

Dial indicator (0.01 mm): **2046AB**
Dial indicator (0.001 mm): **2109AB-10**
ABS Digimatic Indicator (0.01 mm): **543-710B**
ABS Digimatic Indicator (0.0005 mm): **543-700B**

107-201
(Indicator shown is optional)

SPECIFICATIONS

Metric

Order No.	Range (mm)	Flatness (µm)	Parallelism (µm)	Accuracy
107-201	0 - 25	0.6	2	±2µm
107-202	25 - 50			
107-203	50 - 75			
107-204	75 - 100		3	±3µm
107-205	100 - 125			
107-206	125 - 150			
107-207	150 - 175			±4µm
107-208	175 - 200		4	

DIMENSIONS

Measuring range up to 50 mm

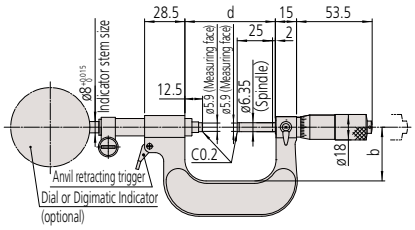

Measuring range up to 75 mm

Unit: mm

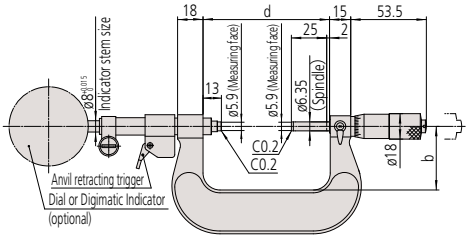

Measuring range up to 200 mm

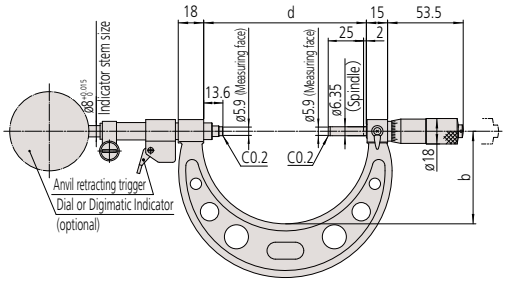

Range (mm)	b	d
0 - 25	30	39
25 - 50	38	64
50 - 75	45	89.5
75 - 100	65	115.1
100 - 125	79	140.1
125 - 150	93	165.1
150 - 175	105	190
175 - 200	118	214

Got Questions?

Micrometers

IP54

Indicating Micrometers SERIES 510

- The micrometer with a built-in dial indicator enables accurate Go/No-go judgement without interruption. Pushing the retractable anvil button causes the anvil and pointer to move, enabling speedy measurements.
- Easy to use when operating one-handed due to retractable anvil.
- In the 1 inch measuring range, models are available that offer left or right positioning of the anvil-retraction button.
- Greatly improved accuracy: indication error and graduation of 0.00005 in.
- IP protection level: 54, coolant-splash resistant during grinding process.

B

510-131

SPECIFICATIONS

Inch

Order No.	Range (in)	Flatness (in)	Parallelism (in)	Dispersion of indication (in)	Dial indication accuracy (in)	Indicating range (in)	Graduation (in)	Dial graduation (in)	Measuring force (N)	Anvil retraction button
510-131	0 - 1	0.000012	0.000024	0.00002	0.00005	±0.0023	0.0001	0.00005	5 - 10	Right side

Metric

Order No.	Range (mm)	Flatness (µm)	Parallelism (µm)	Dispersion of indication (µm)	Dial indication accuracy (µm)	Indicating range (mm)	Graduation (mm)	Dial graduation (mm)	Measuring force (N)	Anvil retraction button
510-121	0 - 25	0.3	0.6	0.4	1	±0.06	0.001	0.001	5 - 10	Right side

DIMENSIONS

Up to 25 mm measuring range (anvil-retraction button on the right side)

Unit: mm

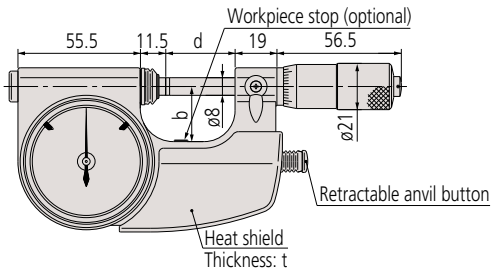

Range (mm)	b	d	t
0 - 25	25	31.5	16.4

Measurement Example

Workpiece stop (optional)

- Produces more stable measurement.
- Three types are available to suit workpieces of different sizes.

Unit: mm

Range	a	b
Workpiece stop A **04AZA124**	ø16	23
Workpiece stop B **04AZA125**	ø14	20.5
Workpiece stop C **04AZA126**	ø14	15

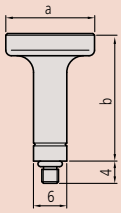

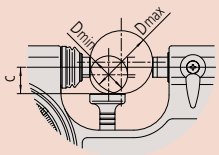

Dmin: Minimum measurable diameter
Dmax: Maximum measurable diameter
C: Distance from the center of the workpiece to the upper surface of the workpiece stop

- Order No. **510-121**, **510-141**, **510-131**, **510-151** Unit: mm

	Dmin	Dmax	c
Workpiece stop A	N/A	N/A	N/A
Workpiece stop B	4	16	5.0
Workpiece stop C	15	25	10.5

- **510-122** and **510-132**

	Dmin	Dmax	c
Workpiece stop A	25	37	15.5
Workpiece stop B	30	42	18.0
Workpiece stop C	41	50	23.5

- **510-123** and **510-133**

	Dmin	Dmax	c
Workpiece stop A	50	61	27.5
Workpiece stop B	54	66	30.0
Workpiece stop C	65	75	35.5

- **510-124** and **510-134**

	Dmin	Dmax	c
Workpiece stop A	75	87	40.5
Workpiece stop B	80	92	43.0
Workpiece stop C	91	100	48.2

Measurement Example

510-151

SPECIFICATIONS

Inch

Order No.	Range (in)	Flatness (in)	Parallelism (in)	Dispersion of indication (in)	Dial indication accuracy (in)	Indicating range (in)	Graduation (in)	Dial graduation (in)	Measuring force (N)	Anvil retraction button
510-151	0 - 1	0.000012	0.000024	0.00002	0.00005	±0.0023	0.0001	0.00005	5 - 10	Left side
510-132	1 - 2									
510-133	2 - 3		0.00004							
510-134	3 - 4									

Metric

Order No.	Range (mm)	Flatness (µm)	Parallelism (µm)	Dispersion of indication (µm)	Dial indication accuracy (µm)	Indicating range (mm)	Graduation (mm)	Dial graduation (mm)	Measuring force (N)	Anvil retraction button
510-141	0 - 25	0.3	0.6	0.4	1	±0.06	0.001	0.001	5 - 10	Left side
510-122	25 - 50									
510-123	50 - 75		1							
510-124	75 - 100									

DIMENSIONS

Up to 25 mm measuring range
(anvil-retraction button on the left side)

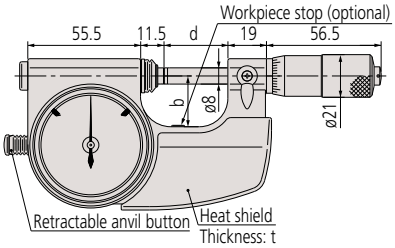

Over 25 mm measuring range
(anvil-retraction button on the left side)

Unit: mm

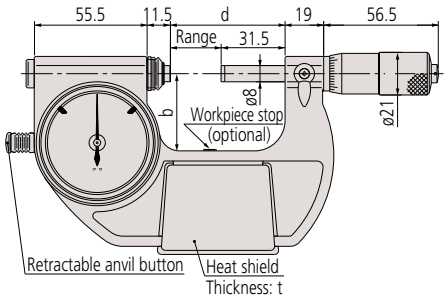

Range (mm)	b	d	t
0 - 25	25	31.5	16.4
25 - 50	38	56.5	16
50 - 75	50	81.5	
75 - 100	63	106.5	

Talk to Sales

Micrometers

IP54

B

Dial Snap Meters
SERIES 523

- The snap meter with a built-in dial indicator enables accurate Go/No-go judgement without interruption. Pushing the retractable anvil button causes the anvil and pointer to move, enabling speedy measuremets.
- Designed for use with a stand to enable a more stable measurement.
- Greatly improved accuracy: indication accuracy and graduation of .00005 in.
- IP protection level: 54, coolant-splash resistant during grinding process.
- Hard-coated crystal: enhanced oil and scratch resistance.

Measurement Example

523-131

SPECIFICATIONS

Inch

Order No.	Range (in)	Dial graduation (in)	Measuring force (N)	Flatness (in)	Parallelism (in)	Dispersion of indication (in)	Dial indication accuracy (in)	Indicating range (in)
523-131	0 - 1	0.00005	5 - 10	0.000012	0.000024	0.00002	0.00005	±0.0023
523-132	1 - 2							
523-133	2 - 3				0.00004			
523-134	3 - 4							

Metric

Order No.	Range (mm)	Dial graduation (mm)	Measuring force (N)	Flatness (µm)	Parallelism (µm)	Dispersion of indication (µm)	Dial indication accuracy (µm)	Indicating range (mm)
523-121	0 - 25	0.001	5 - 10	0.3	0.6	0.4	1	±0.06
523-122	25 - 50							
523-123	50 - 75				1			
523-124	75 - 100							

DIMENSIONS

Unit: mm

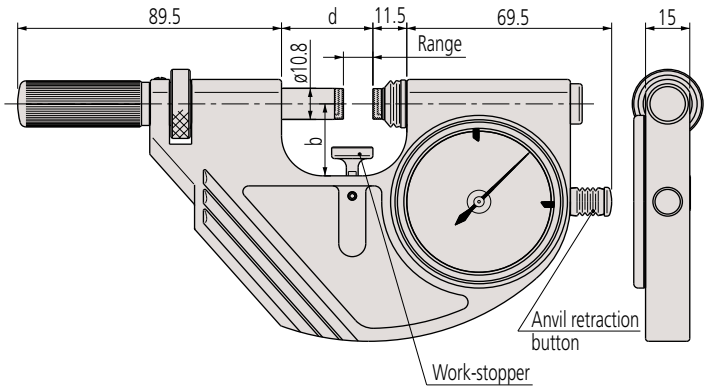

Range (mm)	b	d
0 - 25	25	31
25 - 50	35	56
50 - 75	47	81
75 - 100	60	106

Need Repair?

Mounting Example

ABS Digimatic Indicator

Linear Gage and counter

Typical Indicators used with Gage

- ID-C (20 µinch): **543-702B-02** (Ø3/8")
- LG100 (5 µinch): **542-192** & Counter **542-075A** & Conversion plug **21HZA195**

Note: an adapter sleeve may be needed to adapt for Ø8mm stem OD (on probe) to Ø3/8" ID (on Snap Meter)

Snap Meters
SERIES 523

- The snap meter with an external indicator enables accurate Go/No-go judgement without interruption. Pushing the retractable anvil button causes the anvil and pointer to move, enabling speedy measuremets.
- Select your preferred indicator. The measurement result can be externally output using an indicator with an output function.
- Measuring faces: Carbide tipped.

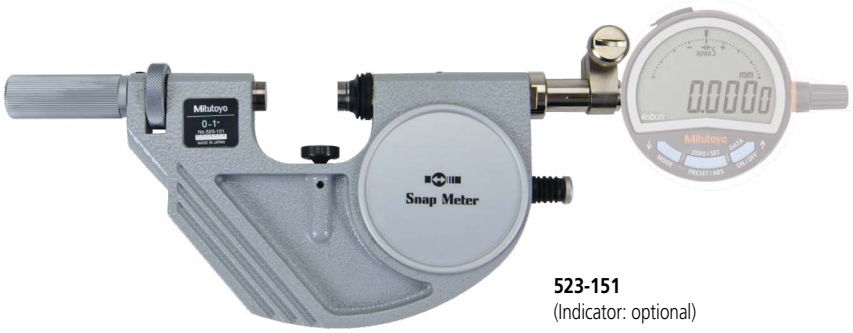

523-151
(Indicator: optional)

SPECIFICATIONS

Inch Gage stem dia 3/8"

Order No.	Range (in)	Anvil movement (in)	Measuring force* (N)	Repeatability of indication (in)	Flatness (in)	Parallelism (in)	Mass (g)
523-151	0 - 1	0.078	5 - 10	0.00002	0.000012	0.000024	710
523-152	1 - 2						810
523-153	2 - 3					0.00004	920
523-154	3 - 4						1050

Metric Gage stem dia 8mm

Order No.	Range (mm)	Anvil movement (mm)	Measuring force* (N)	Repeatability of indication (µm)	Flatness (µm)	Parallelism (µm)	Mass (g)
523-141	0 - 25	2	5 - 10	0.4	0.3	0.6	710
523-142	25 - 50						810
523-143	50 - 75					1	920
523-144	75 - 100						1050

* Measuring force before an indicator is mounted.
Measured at the position where the anvil is retracted by 1 mm from the free position without installing the indicator.

DIMENSIONS

Unit: mm

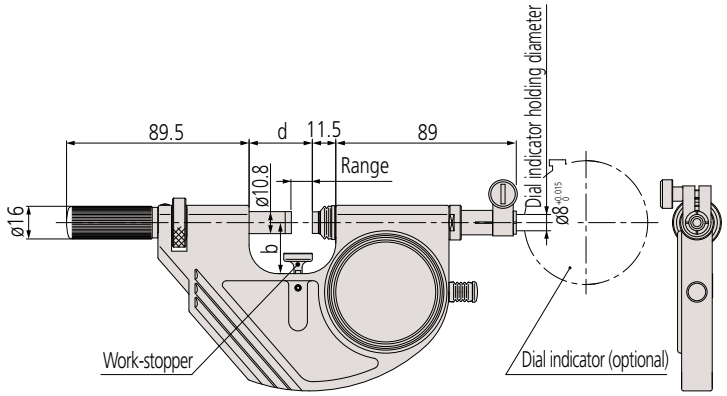

Range (mm)	b	d
0 - 25	25	31
25 - 50	35	56
50 - 75	47	81
75 - 100	60	106

Micrometers

Groove Micrometers
SERIES 146

- Flanged spindle and anvil for measuring width and location of grooves inside bores and tubes.
- Two-directional ratchet stop.
- Non-rotating spindle.
- For OD and ID measurements, a master gage is required for adjusting the reference point (except for 0-1", [0 - 25 mm]).

B

146-231

Measurement Example

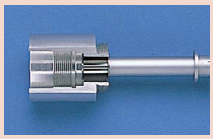

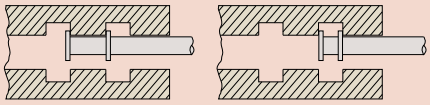

SPECIFICATIONS

Inch

Order No.	Range Inside (in)	Range Outside (in)	Graduation (in)	Accuracy* (in)	Parallelism (in)	Flange (in)
146-231	0.055 - 1.05	0 - 1	0.001	±0.0004	0.0004	ø0.25
146-232						ø0.5
146-233	1.05 - 2.05	1 - 2				
146-234	2.05 - 3.05	2 - 3				
146-235	3.05 - 4.05	3 - 4				

Metric

Order No.	Range Inside (mm)	Range Outside (mm)	Graduation (mm)	Accuracy* (µm)	Parallelism (µm)	Flange (mm)
146-221	1.6 - 26.5	0 - 25	0.01	±10	10	ø6.35
146-222						ø12.7
146-223	26.5 - 51.5	25 - 50				
146-224	51.5 - 76.5	50 - 75				
146-225	76.5 - 101.5	75 - 100				

* E_{MPE} (ISO 3611:2023 and ASME B89.1.13-2013)

DIMENSIONS

Unit: mm

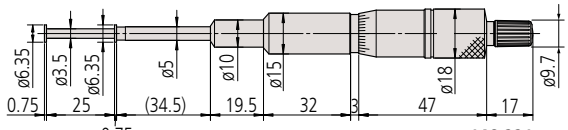

146-221

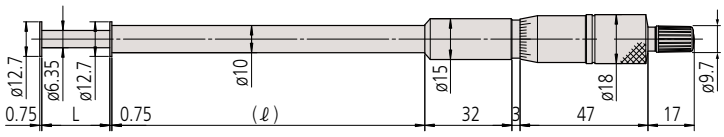

146-222, 146-223, 146-224, 146-225

L	(ℓ)
25	(115)
50	(90)
75	(65)
100	(40)

Where to Buy

QUICKmini Thickness Gage SERIES 700

- Lightweight and palm-sized.
- Highly suitable for quick dimensional inspection of small, thin and delicate objects.

Measurement Example

700-118-30

Functions:

ABS measurement function:
After a data is displayed, next measurement can be performed without zero-setting. Also, the ABS origin point can be changed with ORIGIN switch.

INC measurement function:
Clears the displayed data at any point. The comparative measurement can be easily performed.

Low battery alarm:
Notifies that the battery is wearing down with "B" mark before becoming immeasurable. Thus, the timing for battery replacement can be confirmed in advance.

Typical Applications:

Measurement of small workpieces:
Pearl, jewel, engine tappet shim, screws.

Measurement of thin workpieces:
Printing paper, polyethylene bags, sheet material, noodles and other food products, medium substrate, foil, thin plate, filter cloth and other medical supplies.

Measurement of thin lines and bars: Fishing line, dental reamers, spaghetti, drill for PCBs, wiring.

SPECIFICATIONS

Inch / Metric

Order No.	Range (in)	Resolution	Accuracy* (in)	Maximum response speed	Measuring force (N)	Mass (g)
700-118-30	0 - 0.5	0.0005 in/0.01 mm	±0.001	Unlimited	2 or less	100

Metric

Order No.	Range (mm)	Resolution (mm)	Accuracy* (mm)	Maximum response speed	Measuring force (N)	Mass (g)
700-119-30	0 - 12	0.01	±0.02	Unlimited	2 or less	100

- Power source: SR44 battery (1 pc.), **938882** included as standard

* E_{MPE} (ISO 3611:2023 and ASME B89.1.13-2013)

DIMENSIONS

Unit: mm

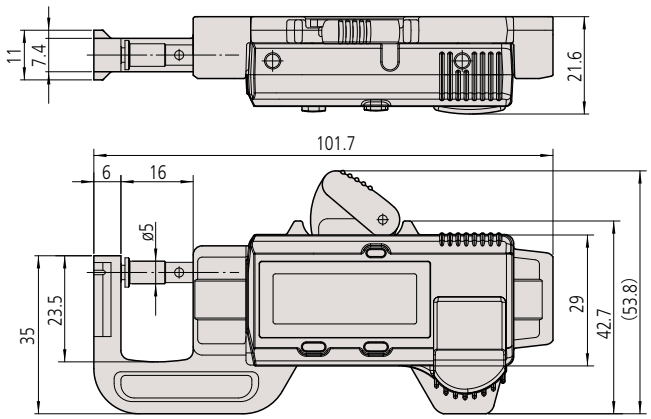

700-119-30

Micrometers

Telescoping Gage Set
SERIES 155

- These tools are for comparing and measuring the diameters of extremely small holes or the widths of narrow grooves that are hard to measure with the other measuring instruments.
- A spring-loaded plunger expands within a bore (or groove) and is locked in place allowing diameter measurements (or width) with an outside micrometer after extraction.

B

Typical Application

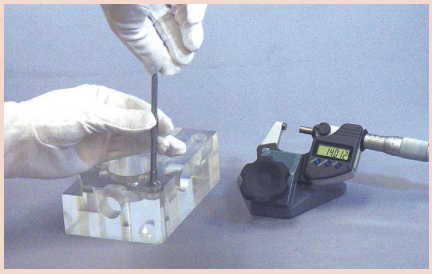

SPECIFICATIONS

Inch

Order No.	Range (in)
6-gage Set	
155-903	0.313 - 6
Gages included	
155-121	0.313 - 0.5
155-122	0.5 - 0.75
155-123	0.75 - 1.25
155-124	1.25 - 2.125
155-125	2.125 - 3.5
155-126	3.5 - 6
4-gage Set	
155-907	0.313 - 2.125
Gages included	
155-121	0.313 - 0.5
155-122	0.5 - 0.75
155-123	0.75 - 1.25
155-124	1.25 - 2.125

Metric

Order No.	Range (mm)
6-gage Set	
155-905	8 - 150
Gages included	
155-127	8 - 12.7
155-128	12.7 - 19
155-129	19 - 32
155-130	32 - 54
155-131	54 - 90
155-132	90 - 150
5-gage Set	
155-904	0.5 - 6
Gages included	
155-122	0.5 - 0.75
155-123	0.75 - 1.25
155-124	1.25 - 2.125
155-125	2.125 - 3.5
155-126	3.5 - 6

DIMENSIONS

Unit: mm

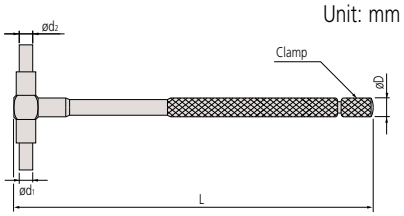

Range (mm)	L	øD	ød1	ød2
8 - 12.7	110	5	4	3
12.7 - 19		5.5	5	3.5
19 - 32				
32 - 54	150	8	7.5	6
54 - 90				
90 - 150				

Need Support?

158-122

Optical Flats SERIES 158

- Used for inspecting the flatness of measuring faces with high accuracy.

SPECIFICATIONS

Inch

Order No.	Thickness (in)	Diameter (in)	Flatness (in)
158-121	0.5	1.8	0.000008
158-122			0.000004
158-123	0.6	2.4	0.000008
158-124			0.000004

Metric

Order No.	Thickness (mm)	Diameter (mm)	Flatness (µm)
158-117	12	45	0.2
158-118			0.1
158-119	15	60	0.2
158-120			0.1

Technical Data

Flatness: .000004" / 0.1µm
Parallelism: .000008" / 0.2µm
Diameter: 1.18" / 30mm

Optical Parallels & Optical Flats SERIES 157, 158

- Designed to inspect parallelism and flatness of measuring faces of micrometers.
- Each set consists of 4 sizes to enable testing parallelism at quarter-turn positions of the micrometer spindle.

157-902

Optical Parallels Sets

SPECIFICATIONS

Inch

Order No.	Range of micrometer to be checked (in)	Sizes of parallels included in set (in)	Diameter (mm)	Flatness (µm)	Parallelism (µm)	Remarks (mm)
157-901	0 - 1	0.5000, 0.5062, 0.5125, 0.5187	ø30	0.1	0.2	For 25
157-902	1 - 2	1.0000, 1.0062, 1.0125, 1.0187				For 50

Metric

Order No.	Range of micrometer to be checked (mm)	Sizes of parallels included in set (mm)	Diameter (mm)	Flatness (µm)	Parallelism (µm)	Remarks (mm)
157-903	0 - 25	12.00, 12.12, 12.25, 12.37	ø30	0.1	0.2	For 25
157-904	25 - 50	25.00, 25.12, 25.25, 25.37				For 50

Note: Also available individually, using the following Order No.

Individual Optical Parallels

Inch

Order No.	Thickness (in)
157-109	0.5000
157-110	0.5062
157-111	0.5125
157-112	0.5187

Inch

Order No.	Thickness (in)
157-113	1.0000
157-114	1.0062
157-115	1.0125
157-116	1.0187

Metric

Order No.	Thickness (mm)
157-101	12.00
157-102	12.12
157-103	12.25
157-104	12.37

Metric

Order No.	Thickness (mm)
157-105	25.00
157-106	25.12
157-107	25.25
157-108	25.37

Spindle Attachment Tips

Spline

64PMT192

Blade

64PMT193

Disk

64PMT194

Knife-edge

64PMT195

Comparator

64PMT196

Ball

64PTS289

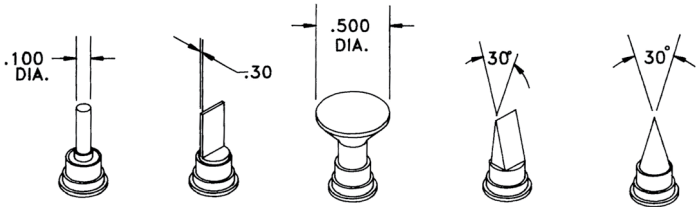

Micrometers

Setting Standards for Outside Micrometers SERIES 167

- Used for setting the zero point on outside micrometers.

167-148

Typical Application

Micrometer Inspection Gage Block Set

Refer to page E-9 for details.

SPECIFICATIONS and DIMENSIONS

167-101 to **167-103**
167-141 to **167-143**

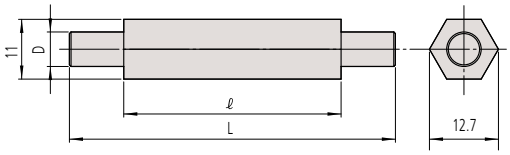

Unit: mm

Inch

Order No.	Length <L> (in)	Accuracy (in)	Parallelism (in)	Flatness (in)	ℓ (mm)	Diameter <D> (in)
167-141	1	±0.00005	0.00008	0.000012	18	0.25
167-142	2	±0.0001			40	
167-143	3	±0.0001				

Metric

Order No.	Length <L> (mm)	Accuracy (μm)	Parallelism (μm)	Flatness (μm)	ℓ (mm)	Diameter <D> (mm)
167-101	25	±1.5	2.0	0.3	18	6.35
167-102	50	±2.0			40	
167-103	75	±2.5				

167-104 to **167-107**
167-144 to **167-147**

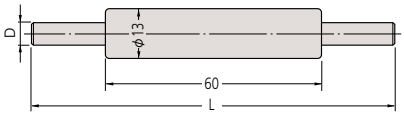

Unit: mm

Inch

Order No.	Length <L> (in)	Accuracy (in)	Parallelism (in)	Flatness (in)	Diameter <D> (in)
167-144	4	±0.0001	0.00008	0.000012	0.31
167-145	5	±0.00015			
167-146	6				
167-147	7				

Metric

Order No.	Length <L> (mm)	Accuracy (μm)	Parallelism (μm)	Flatness (μm)	Diameter <D> (mm)
167-104	100	±3	2.0	0.3	7.9
167-105	125	±3.5			
167-106	150	±4			
167-107	175	±4.5			

167-108 to **167-119**
167-148 to **167-159**

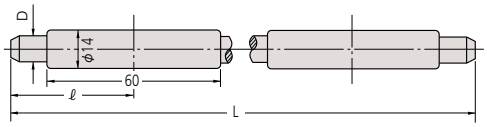

Unit: mm

Inch

Order No.	Length <L> (in)	Accuracy (in)	Parallelism (in)	Flatness (in)	ℓ (mm)	Diameter <D> (in)
167-148	8	±0.00015	0.00008	0.000012	47	0.37
167-149	9	±0.0002				
167-150	10	±0.0002			52	
167-151	11	±0.0002			57	
167-152	12	±0.00025			64	
167-153	13	±0.00025			69	
167-154	14	±0.00025			74	
167-155	15	±0.00025			80	
167-156	16	±0.00025			85	
167-157	17	±0.00025			90	
167-158	18	±0.00025			95	
167-159	19	±0.0003			101	

Metric

Order No.	Length <L> (mm)	Accuracy (μm)	Parallelism (μm)	Flatness (μm)	ℓ (mm)	Diameter <D> (mm)
167-108	200	±5.0	2.0	0.3	47	9.4
167-109	225	±5.5				
167-110	250	±6.0			52	
167-111	275	±6.5			57	
167-112	300	±7			64	
167-113	325	±7.5			69	
167-114	350	±8			74	
167-115	375	±8.5			80	
167-116	400	±9			85	
167-117	425	±9.5			90	
167-118	450	±10			95	
167-119	475	±10.5			101	

Setting Standards for Outside Micrometers SERIES 167

Unit: mm

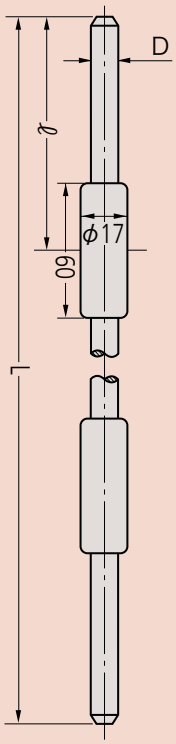

167-120 to **167-404**
167-160 to **167-443**

Inch

Order No.	Length <L> (in)	Accuracy (in)	Parallelism (in)	Flatness (in)	ℓ (mm)	Diameter <D> (in)
167-160	20				106	
167-161	21				112	
167-162	22	±0.0003			117	
167-163	23				122	
167-164	24				128	
167-165	25				133	
167-166	26				138	
167-167	27				142	
167-168	28				147	
167-169	29				153	
167-170	30	±0.00035	0.00008	0.000012	158	
167-171	31				164	
167-172	32				170	
167-173	33				175	
167-174	34				180	
167-175	35				185	
167-176	36				191	
167-177	37				196	
167-178	38				201	
167-179	39				207	
167-180	40				211	
167-405	41					
167-406	42					
167-407	43					
167-408	44					
167-409	45					
167-410	46					
167-411	47					
167-412	48					
167-413	49					
167-414	50					0.47
167-415	51					
167-416	52					
167-417	53					
167-418	54					
167-419	55					
167-420	56					
167-421	57					
167-422	58	±0.0004				
167-423	59					
167-424	60					
167-425	61					
167-426	62					
167-427	63					
167-428	64					
167-429	65					
167-430	66					
167-431	67					
167-432	68					
167-433	69					
167-434	70					
167-435	71					
167-436	72					
167-437	73					
167-438	74					
167-439	75					
167-440	76					
167-441	77					
167-442	78					
167-442	79					

Metric

Order No.	Length <L> (mm)	Accuracy (µm)	Parallelism (µm)	Flatness (µm)	ℓ (mm)	Diameter <D> (mm)
167-120	500	±11			106	
167-121	525	±11.5			112	
167-122	550	±12			117	
167-123	575	±12.5			122	
167-124	600	±13			128	
167-125	625	±13.5			133	
167-126	650	±14			138	
167-127	675	±14.5			142	
167-128	700	±15			147	
167-129	725	±15.5			153	
167-130	750	±16			158	
167-131	775	±16.5			164	
167-132	800	±17			170	
167-133	825	±17.5			175	
167-134	850	±18			180	
167-135	875	±18.5			185	
167-136	900	±19			191	
167-137	925	±19.5			196	
167-138	950	±20			201	
167-139	975	±20.5			207	
167-140	1000	±21			211	
167-365	1025	±21.5			217	
167-366	1050	±22			222	
167-367	1075	±22.5			227	
167-368	1100	±23			232	
167-369	1125	±23.5			238	
167-370	1150	±24			243	
167-371	1175	±24.5			248	
167-372	1200	±25			254	
167-373	1225	±25.5			259	
167-374	1250	±26	2.0	0.3	264	11.9
167-375	1275	±26.5			269	
167-376	1300	±27			275	
167-377	1325	±27.5			280	
167-378	1350	±28			285	
167-379	1375	±28.5			291	
167-380	1400	±29			296	
167-381	1425	±29.5			301	
167-382	1450	±30			306	
167-383	1475	±30.5			312	
167-384	1500	±31			317	
167-385	1525	±31.5			322	
167-386	1550	±32			328	
167-387	1575	±32.5			333	
167-388	1600	±33			338	
167-389	1625	±33.5			343	
167-390	1650	±34			349	
167-391	1675	±34.5			354	
167-392	1700	±35			359	
167-393	1725	±35.5			364	
167-394	1750	±36			370	
167-395	1775	±36.5			375	
167-396	1800	±37			380	
167-397	1825	±37.5			386	
167-398	1850	±38			391	
167-399	1875	±38.5			396	
167-400	1900	±39			401	
167-401	1925	±39.5			407	
167-402	1950	±40			412	
167-403	1975	±40.5			417	
167-404	2000	±41			423	

Need Service?

Micrometers

B

Cylindrical Standards for Screw Thread Micrometers SERIES 167

- Used to set the zero point of screw thread micrometers.

167-297
(60° screw)

Inch

Order No.	Length (in)	Accuracy (in)
Metric (unified) θ=60°		
167-294	1	±0.00015
167-295	2	±0.0002
167-296	3	±0.00025
167-297	4	±0.0003
167-298	5	±0.00035
167-299	6	±0.0004
Whitworth θ=55°		
167-283	1	±0.00015
167-284	2	±0.0002
167-285	3	±0.00025
167-286	4	±0.0003
167-287	5	±0.00035
167-288	6	±0.0004

Metric

Order No.	Length (mm)	Accuracy (μm)
Metric (unified) θ=60°		
167-261	25	±4
167-262	50	±5
167-263	75	±6
167-264	100	±7
167-265	125	±8
167-266	150	±9
167-267	175	±10
167-268	200	±11
167-269	225	±12
167-270	250	±13
167-271	275	±14
Whitworth θ=55°		
167-272	25	±4
167-273	50	±5
167-274	75	±6
167-275	100	±7
167-276	125	±8
167-277	150	±9
167-278	175	±10
167-279	200	±11
167-280	225	±12
167-281	250	±13
167-282	275	±14

Typical Application

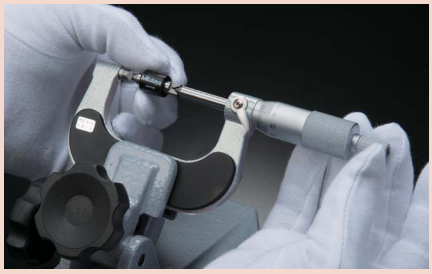

Setting Standards for V-anvil Micrometers SERIES 167

- Used for setting the zero point of V-anvil micrometers.

167-339

Inch

Order No.	Diameter (in)	Accuracy (in)	Type
167-337	0.2	±0.0001	Plug
167-338	0.4		
167-339	1		
167-340	1.6	±0.00015	Ring

Metric

Order No.	Diameter (mm)	Accuracy (μm)	Type
167-327	5	±2	Plug
167-328	10		
167-329	25		
167-330	40	±3	Ring
167-331	55		
167-332	70		
167-333	85		
167-334	100	±5	
167-335	115		
167-336	130		

Typical Application

Need Calibration?

Individual Holder and Wire Set

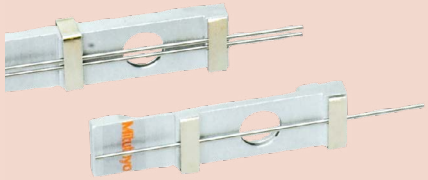

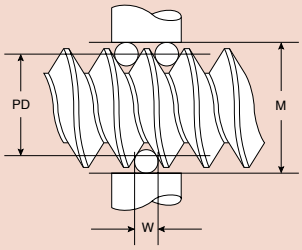

PD = Pitch Diameter
M = Measurement over wires
W = Wire diameter
C = Constant
C = .86603 x Pitch (inches) -3W
P.D. = M-C
W = .57735 x P

Applications

- Measure set of thread plug gages and working thread plug gages.
- Monitor the wear on working thread plug gages.
- Monitor and control pitch diameter variation during thread fabrication.
- Reduce measurement time to a fraction of the time normally taken using the traditional three wire method.
- Use in conjunction with Go/No-go thread ring gages to control thread size to the most demanding specifications.
- Determine out of roundness and taper that may exist in threaded parts.
- Applications for preplating and post plating thread measurement.

Tolerance of Wires:

- Diameter +/- .000010"
- Roundness +/- .000010"
- Surface finish 2 micro inches AA, lapped
- Hardness HRC 59-64
- Certification of accuracy included
- Traceable to NIST
- Meets or exceeds all ANSI and ISO specs

3-Wire Thread Measuring System

- Fast and accurate method of thread measuring available for use with micrometer

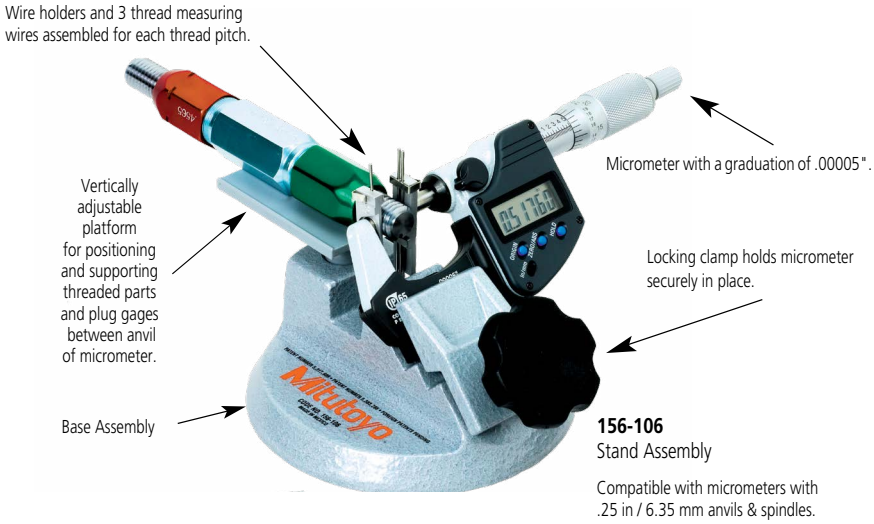

156-106
Stand Assembly

Compatible with micrometers with .25 in / 6.35 mm anvils & spindles.

Inch

Order No. *1,*2	Thread Per Inch	Thread Measuring Wire Diameter
64AAA201	120	.00481
64AAA202	100	.00577
64AAA203	95	.00601
64AAA204	90	.00642
64AAA205	80	.00722
64AAA206	72	.00802
64AAA207	64	.00902
64AAA208	56	.01031
64AAA209	50	.01155
64AAA210	48	.01203
64AAA211	44	.01312
64AAA212	40	.01443
64AAA213	36	.01604
64AAA214	32	.01804
64AAA215	30	.01925
64AAA216	28	.02062
64AAA217	27	.02138
64AAA218	26	.02221
64AAA219	24	.02406
64AAA220	22	.02624
64AAA221	20	.02887
64AAA222	18	.03208
64AAA223	16	.03608
64AAA224	14	.04124
64AAA225	13	.04441
64AAA226	12	.04811
64AAA227	11.5	.05020
64AAA228	11	.05249
64AAA229	10	.05774
64AAA230	9	.06415
64AAA231	8	.07217
64AAA232	7.5	.07698
64AAA233	7	.08248
64AAA234	6	.09623
64AAA235	5.5	.10497
64AAA236	5	.11547

*1 For 6.35mm Spindle Diameter holder only, add "H" suffix to Order No. (i.e. 64AAA201H)
*2 For 8mm Spindle Diameter holder only, add "H8" suffix to Order No. (i.e. 64AAA201H8)

Metric

Order No. *1	Pitch	mm Diameter	Inch Diameter
64AAA251	.2mm	.1155	.00455
64AAA252	.225mm	.1299	.00511
64AAA253	.25mm	.1443	.00568
64AAA254	.30mm	.1732	.00682
64AAA255	.35mm	.2021	.00796
64AAA256	.40mm	.2309	.00909
64AAA257	.45mm	.2598	.01023
64AAA258	.50mm	.2887	.01137
64AAA259	.55mm	.3175	.01250
64AAA260	.60mm	.3464	.01364
64AAA261	.70mm	.4041	.01591
64AAA262	.75mm	.4330	.01705
64AAA263	.80mm	.4619	.01818
64AAA264	.85mm	.4907	.01932
64AAA265	.90mm	.5196	.02046
64AAA266	1.00mm	.5774	.02273
64AAA267	1.25mm	.7217	.02841
64AAA268	1.50mm	.8660	.03410
64AAA269	1.75mm	1.0104	.03978
64AAA270	2.00mm	1.1547	.04546
64AAA271	2.50mm	1.4434	.05683
64AAA272	3.00mm	1.7321	.06819
64AAA273	3.50mm	2.0207	.07956
64AAA274	4.00mm	2.3094	.09092

*1 For 6.35mm Spindle Diameter holder only, add "H" suffix to Order No. (i.e. 64AAA201H)

Micrometers

Color-Coded Ratchets and Speeder Covers

- Ratchet and speeder covers in a choice of seven colors for use in instrument identification control schemes: red, blue, yellow, green, brown, black and gray.

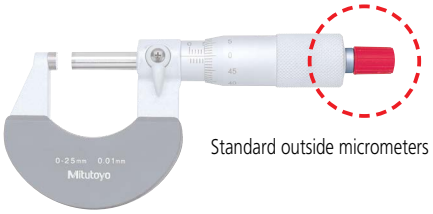

Standard outside micrometers

Ratchet

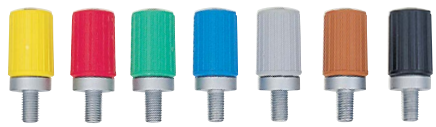

Speeder

Speeder Covers

QuantuMike

Color-coded speeder covers

SPECIFICATIONS

Order No.	Color
04GAA899	Black
04GAA900	Red
04GAA901	Yellow
04GAA902	Green
04GAA903	Blue
04AAB208	Gray

SPECIFICATIONS

Analog type: 12" (0 to 300 mm)

Order No.		Color	Material
Ratchet	Speeder		
04GZA239	04GAA260	Gray	Plastic
985056	301708	Black	
985061	301709	Red	
985081	301713	Blue	
985071	301711	Yellow	
985076	301712	Green	
985066	301710	Brown	
950700	—	Gray	Steel

Analog / Digimatic types: 12" - 40" (300 to 1000 mm)

Order No.		Color	Material
Ratchet	Speeder		
04GZA243	04GAA260	Gray	Plastic
—	301708	Black	
—	301709	Red	
—	301713	Blue	
—	301711	Yellow	
—	301712	Green	
—	301710	Brown	
950701	—	Gray	Steel

Digimatic type 12" (0 to 300 mm*)

Order No.*		Color	Material
Ratchet	Speeder		
04AZB661	04GAA260	Gray	Plastic
04GZA241	04GAA260	Gray	
—	301708	Black	
—	301709	Red	
—	301713	Blue	
—	301711	Yellow	
—	301712	Green	
—	301710	Brown	
951588	—	Gray	Steel

* Cannot be used for analog types.

Lubricant for Measuring Tools

- The oil is for maintaining measuring tools.

Note: May not be used for some parts such as the spindle of a dial indicator or Digimatic indicator.

SPECIFICATIONS

Order No.	Product name
207000	Micrometer oil

207000
(32 ml)

Find a Distributor

Micrometer Stands SERIES 156

- Dedicated stand for micrometers.
- Designed to allow benchtop use of hand-held micrometers or other gages which have frames suitable for gripping by the clamp. Reduces the influence of temperature changes due to body heat, enabling higher-accuracy measurement.

Typical Application

156-101-10

156-101-10

SPECIFICATIONS

Order No.	Measuring range of standard outside micrometer	Remarks
156-101-10	0.6- 4 in (15 - 100 mm)*	Adjustable angle type

* Items that cannot be mounted on these stands
(*Compatible with most 0-3 in. (0-75mm) micrometers)

DIMENSIONS

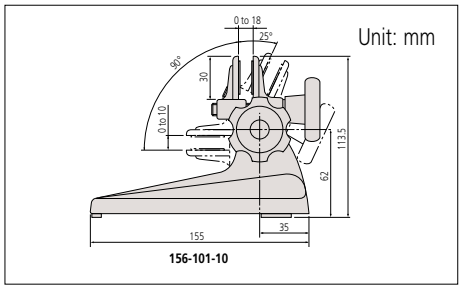

Typical Application

156-105-10

156-105-10

SPECIFICATIONS

Order No.	Measuring range of standard outside micrometer	Remarks
156-105-10	1, 2 in (25, 50 mm)	Fixed angle type

DIMENSIONS

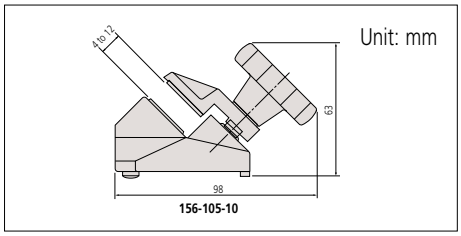

Typical Application

156-102

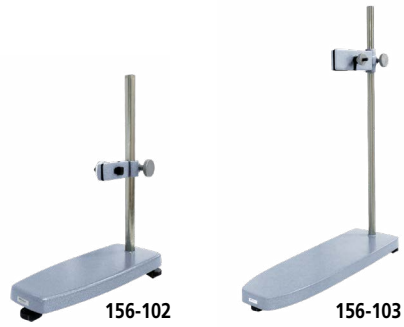

SPECIFICATIONS

Order No.	Measuring range of standard outside micrometer	Remarks
156-102	4 - 12 in (100 - 300 mm)	Vertical type
156-103	13 - 40 in (325 - 1000 mm)	Vertical type

DIMENSIONS

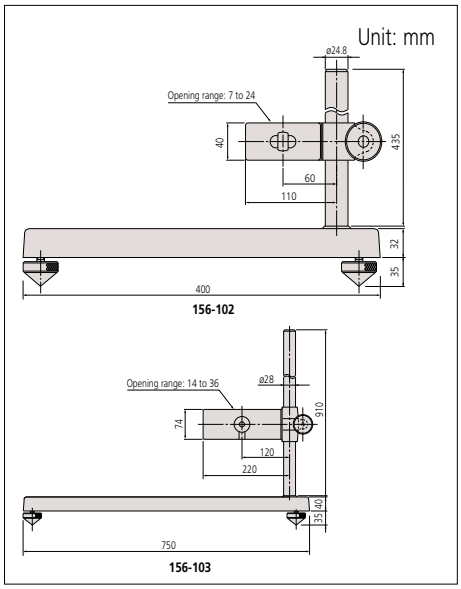

Tool Kits

Tool Kits

Durable zipper cases and classic wooden cases protect your tools with style. Versions include mechanical, standard Digimatic, or QuantuMike-based sets. QuantuMikes are just as accurate as standard Digimatic micrometers, but up to 4x faster.

Empty cases are also available as a new home for your existing tools!

- Rugged, impact-resistant build.
- Case moulds for Digimatic and mechanical tools.
- Long-life zippers and stain-resistant cover.
- 2X magnet-backed slots for holing steel rules, spanners, thumb drives and more.
- Handsome, solid mahogany.
- Various sizes/capacities.

64PKA288A

Order No.	64PKA288A (Soft Case Tool Kit)
	64PKA152 (Wooden Tool Kit)
Item No.	**Description**
293-180-40	Digimatic Micrometer (Friction Thimble Type) (Range: 0 - 1" / 0 - 25.4mm, LCD Resolution: .00005" / 0.001mm)
500-196-30	Digimatic Caliper with ABSOLUTE Encoder (Range: 0 - 6" / 0 - 150mm, LCD Resolution: .0005" / 0.001mm)
64PMT183	Soft Case included with **64PKA288A**
64PPP932	Mahogany Case included with **64PKA152**

64PKA152

64PKA285

Order No.	64PKA285 (Soft Case Tool Kit)
	64PKA076B (Wooden Tool Kit)
Item No.	**Description**
293-340-32	Digimatic Micrometer (Ratchet Stop Type) (Range: 0 - 1" / 0 - 25.4mm, LCD Resolution: .00005" / 0.001mm)
500-196-30	Digimatic Caliper with ABSOLUTE Encoder (Range: 0 - 6" / 0 - 150mm, LCD Resolution: .0005" / 0.001mm)
64PMT183	Soft Case included with **64PKA285**
64PPP932	Mahogany Case included with **64PKA076B**

64PKA076B

64PKA286

Order No.	64PKA286 (Soft Case Tool Kit)
	64PKA077B (Wooden Tool Kit)
Item No.	**Description**
293-348-32	Digimatic Micrometer (Friction Thimble Type) (Range: 0 - 1" / 0 - 25.4mm, LCD Resolution: .00005" / 0.001mm)
500-196-30	Digimatic Caliper with ABSOLUTE Encoder (Range: 0 - 6" / 0 - 150mm, LCD Resolution: .0005" / 0.001mm)
64PMT183	Soft Case included with **64PKA286**
64PPP932	Mahogany Case included with **64PKA077B**

64PKA077B

Tool Kits

64PKA283

Order No.	64PKA283 (Soft Case Tool Kit)
	64PKA068B (Wooden Tool Kit)
Item No.	**Description**
103-135	Outside Micrometer (Friction Thimble Type) (Range: 0–1", Graduation: .0001")
505-742J	Dial Caliper (Range: 0–6", Dial Graduation: .001")
182-204	6" Full-Flexible Rule (3R)
64PMT183	Soft Case included with **64PKA283**
64PPP932	Mahogany Case included with **64PKA068B**

64PKA068A

64PKA284

Order No.	64PKA284 (Soft Case Tool Kit)
	64PKA080B (Wooden Tool Kit)
Item No.	**Description**
182-102	6" Steel Rule (16R)
103-177	Micrometer (Ratchet Thimble) (Range 0-1", Graduation .001")
505-740J	Dial Caliper (Range: 0–6", Dial Graduation: .001")
64PMT183	Soft Case included with **64PKA284**
64PPP932	Mahogany Case included with **64PKA080B**

64PKA080B

Order No.	64PKA069A (Inch Tool Kit)
Item No.	**Description**
103-135	Outside Micrometer (Friction Thimble Type) (Range: 0–1", Graduation: .0001")
182-202	6" Full-Flexible Rule (16R)
513-518T	Test Indicator Set (Range: .04", Graduation: .001")
505-742J	675 Dial Caliper (Range: 0–6", Dial Graduation: .001")
050501	Mahogany Case

The basic measuring instruments recommended for vocational students and machinist apprentices are supplied in this kit.

64PKA069A

Order No.	64PKA070A (Inch Tool Kit)
Item No.	**Description**
101-117	Outside Micrometer (Friction Thimble Type) (Range: 0–1", Graduation: .0001")
129-132	Depth Micrometer (with 6 pcs rods) (Range: 0–6", Graduation: .001")
182-202	Full-Flexible Rule (16R)
505-742J	Dial Caliper (Range: 0–6", Graduation: .001")
050503	Mahogany Case

For operations where depth measurements are a primary concern, this kit is ideal for measuring depths to 6", in addition to providing the tools for regular precision measurements.

64PKA070A

Got Questions?

Featured Products

Digimatic Micrometer Heads
350 Series

Refer to page B-81 for details.

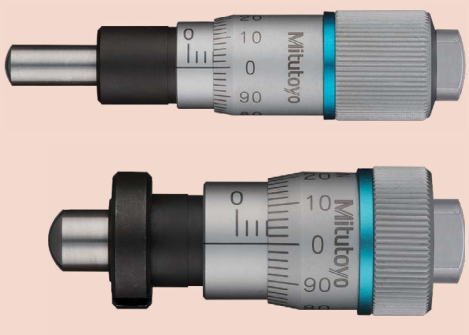

Fine Feed Micrometer Heads (0.1 mm/rev)
148 Series

Refer to page B-112 for details.

Micro Jack
Series 7

Refer to page B-121 for details.

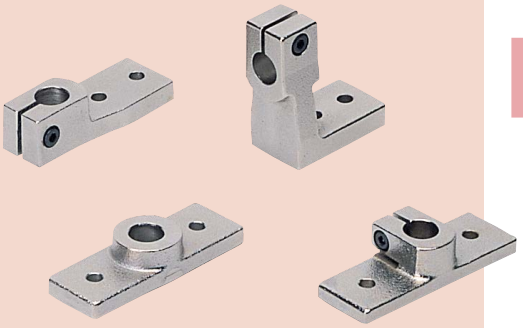

Mounting Fixtures

Refer to page B-122 for details.

B

Micrometer Heads

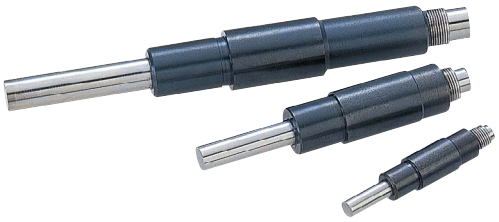

Precision Lead Screws

Refer to page B-124 for details.

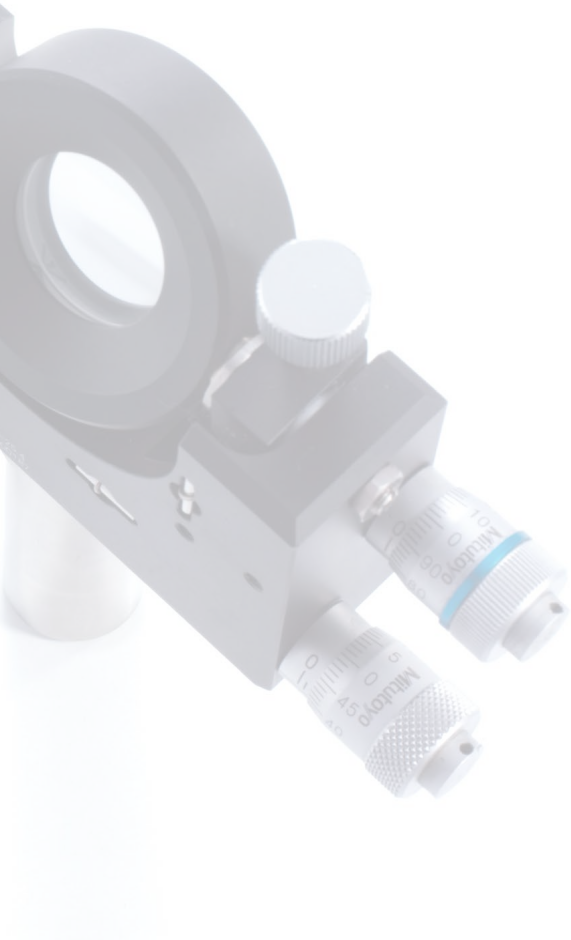

U-WAVE fit

Measurement Data Wireless Communication System

Bluetooth® communication enables wireless transfer of measurement data from Digimatic micrometers and callipers to PCs, smartphones, tablets and such other devices.

IP Codes

The code indicates the degree of protection against the ingress of foreign materials and water as defined in the IEC standard (IEC 60529). The number indicates the protection level.
(Refer to page 3)

Dust- and Water-Protected

TÜV Rheinland Certification Marks

All products with the marks have passed the IP test carried out by the German accreditation organization, TÜV Rheinland.

INDEX

Digimatic Micrometer Heads (Digital display)

Micrometer Head Selection Guide	B-81
Digimatic Micrometer Heads	B-82,83,84

Micrometer Heads (Analog display/Standard type/High function type)

Small/Ultra-small Type	B-85,86
Short Thimble with Multiple Diameter Options	B-87,88,89
Small Standard Type	B-90,91,92
Small Thimble Diameter Standard Type	B-93,94,95
Locking-screw Type	B-96,97,98,99
Fine Spindle Feed of 0.1 mm/rev	B-100,101
Fine spindle Feed of 0.25 mm/rev	B-102
Differential Screw Thread Translator (Extra-Fine Feed) Type	B-103,104
Small Standard Type with Carbide-tipped Spindle	B-105,106
Medium-sized Standard Type	B-107,108,109,110
Medium-sized Standard Type with 8 mm Diameter Spindle	B-111,112,113,114
Non-rotating Spindle Type	B-115
Quick Spindle Feed of 1 mm/rev	B-116
Large Thimble Type	B-117,118
XY-Stage Type	B-119
Long Stroke Non-rotating Spindle	B-120
High Accuracy and Resolution	B-120

Optional Accessories

Digit Counter Type/Micro Jack	B-121
Mounting Fixtures	B-122,123
Precision Lead Screws	B-124

Micrometer Head

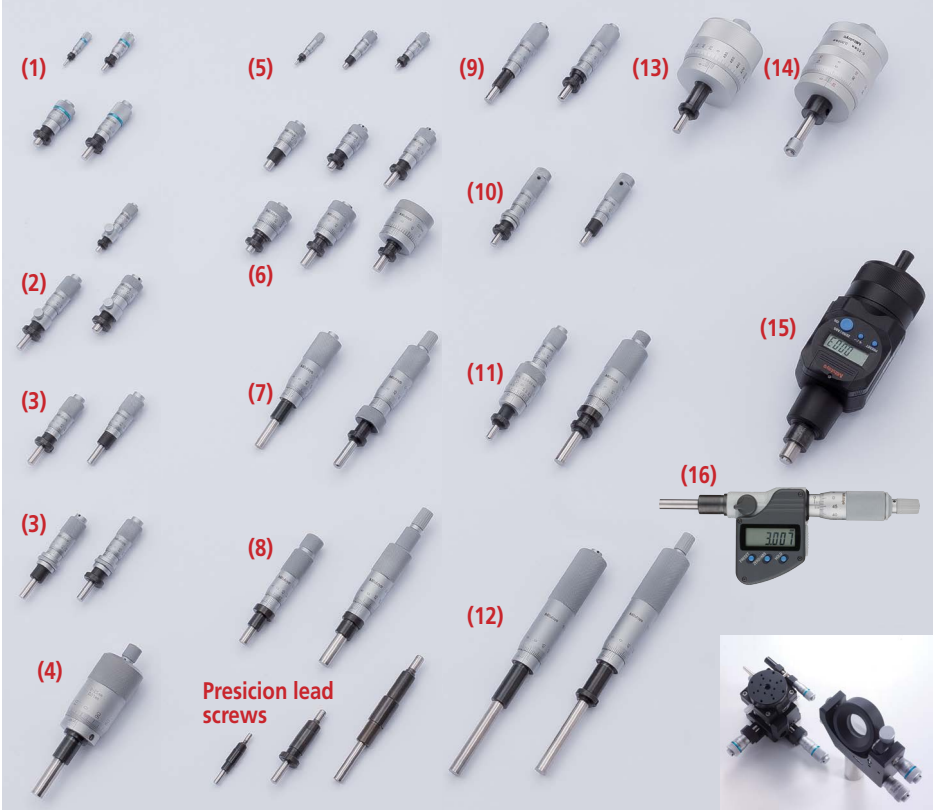

Also refer to "Quick Guide to Precision Measuring Instruments" brochure.

Range	Main feature of head		Series	Page
0.02 in /1 mm	Differential Screw Thread Translator (Extra-Fine Feed) Type		110	B-37 to B-38
0.05 in /2.5 mm	Differential Screw Thread Translator (Extra-Fine Feed) Type	(11)		B-37 to B-38
0.2 in /5 mm	Fine Spindle Feed of 0.1 mm/rev	(1)	148	B-34 to B-35
	Small/Ultra-small Type	(5)		B-7 to B-8
0.25 in /6.5 mm	Locking-screw Type	(2)		B-28 to B-31
	Fine Spindle Feed of 0.1 mm/rev	(1)		B-34 to B-35
	Fine Spindle Feed of 0.25 mm/rev			B-36
	Small/Ultra-small Type	(5)		B-7 to B-8
	Short Thimble with Multiple Diameter Options	(6)		B-9 to B-11
10 mm	Large Thimble Type	(13)	152	B-39 to B-40
0.5 in /13 mm	Locking-screw Type	(2)	148	B-28 to B-31
	Fine Spindle Feed of 0.25 mm/rev			B-36
	Differential Screw Thread Translator (Extra-Fine Feed) Type	(11)	110	B-37 to B-38
	Short Thimble with Multiple Diameter Options	(6)	148	B-9 to B-11
	Small Standard Type	(3)		B-12 to B-14
	Small Thimble Diameter Standard Type	(10)		B-15 to B-17
0.5 in /15 mm	Non-rotating Spindle Type	(8)	153	B-32
	Quick Spindle Feed of 1 mm/rev	(4)	152	B-33
	Small Standard Type with Carbide-tipped Spindle	(9)	149	B-18 to B-19
1 in /25 mm	Clear digital display, Non-rotating spindle and IP 65 rated version	(16)	350	B-4 to B-6
	Clear digital display, Non-rotating spindle			
	Non-rotating Spindle Type	(8)	153	B-32
	Quick Spindle Feed of 1 mm/rev		152	B-33
	Large Thimble Type			B-39 to B-40
	XY-Stage Type	(14)		B-41
	High Accuracy and Resolution		153	B-42
	Digit Counter Type		250	B-43
	Medium-sized Standard Type	(7)	150	B-20 to B-23
	Medium-sized Standard Type with 8 mm Diameter Spindle		151	B-24 to B-27
2 in /50 mm	Digimatic	(15)	164	B-4
	Large Thimble Type		152	B-39 to B-40
	Long Stroke Non-rotating Spindle		197	B-42
	Medium-sized Standard Type with 8 mm Diameter Spindle	(12)	151	B-24 to B-27
60 - 75 mm	Micro Jack		7	B-43

Precision adjustment of mirror in holder

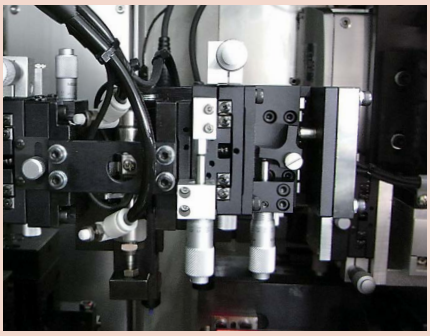

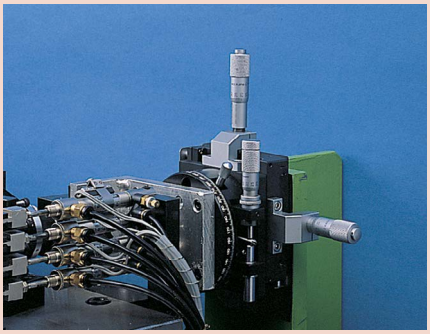

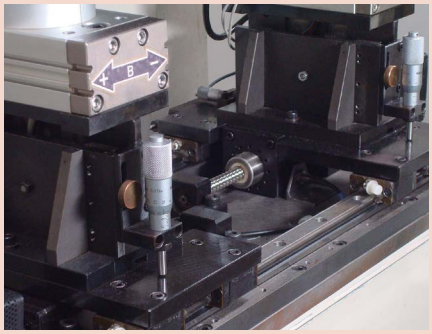

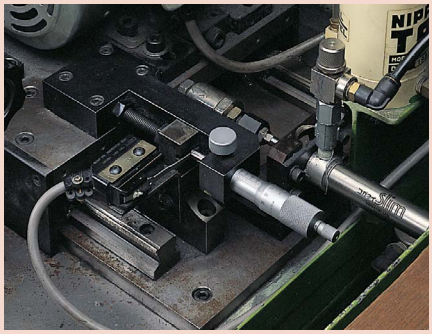

Micrometer Head

IP65 U-WAVE fit

Dust- and Water-Protected
TÜVRheinland CERTIFIED
www.tuv.com ID 0000040191

Applicable models:
350-261-32, **350-271-32**, **350-273-32**, **350-28X-30**, **350-361-32** and **350-38X-30**

Digimatic Micrometer Heads SERIES 164, 350

- Easy-to-read digital display.
- All models support data output.

Rotatable display

164-163

350-281-30 (IP65)

Functions (series 164)

Origin point setting (ABS measurement system):
Resets the ABS origin at the current spindle position to the minimum value of the measuring range and switches to ABS mode.

Zero-setting (INC measurement system):
A brief press on the ZERO/ABS button sets display to zero at the current spindle position and switches to the incremental (INC) measuring mode. A longer press resets to the ABS measuring mode.

Data output:
Equipped with output port for transferring measurement data to a Statistical Process Control (SPC) and measurement system.

Auto power ON/OFF:
The reading on the display disappears after this instrument is idle for about 20 minutes, but the reading and measurement mode are retained. Turning the spindle causes the reading on the display to reappear.

Error alarm:
In case of an overflow on the display or a computing error, an error message appears on the display and the measuring function stops. This prevents an instrument from giving an erroneous reading. Also, when the battery voltage drops to a certain level, the low-battery indicator appears well before the micrometer becomes unusable.

Optional Output Devices (350 Series Only)

Order No.	Description
Wired	
264-020	USB Input tool (**IT-020U**)
- 05CZA662	Connecting Cable (**1m**)
- 05CZA663	Connecting Cable (**2m**)
06AFM380B	USB Input Tool Direct (**2m**)
Wireless	
264-622	Transmitter (**IP67**)
264-626	Transmitter (**IP67, Bluetooth**)
264-623	Transmitter (**Buzzer**)
264-627	Transmitter (**Buzzer, Bluetooth**)
- 02AZF310	Connecting Unit (**Adapter**)
- 02AZE140B	Connecting Cable (**foot switch compatible**)

Note: Model uses connector type "B"

Optional Output Devices (164 Series Only)

Order No.	Description
Wired	
264-020	USB Input tool (**IT-020U**)
- 959149	Connecting Cable (**1m**)
- 959150	Connecting Cable (**2m**)
06AFM380C	USB Input Tool Direct (**2m**)
Wireless	
264-622	Transmitter (**IP67**)
264-626	Transmitter (**IP67, Bluetooth**)
264-623	Transmitter (**Buzzer**)
264-627	Transmitter (**Buzzer, Bluetooth**)
- 02AZD790C	Connecting Cable
- 02AZE140C	Connecting Cable (**foot switch compatible**)

Note: Model uses connector type "C"

SPECIFICATIONS

Inch / Metric

Order No.	Range (in)	Resolution	Graduation	Stem	Stem dia. (in)	Spindle end	Graduation features	Accuracy (in)
164-164	0 - 2	0.00005 in/ 0.001 mm	—	Plain	0.709	Flat (carbide tip)	—	±0.00015
350-351-32	0 - 1		0.001 in/ 0.01 mm	Plain	0.375	Flat (carbide tip)	Standard	±0.0001
350-352-32				W/clamp nut				
350-353-32				Plain		Spherical (SR4) (carbide tip)		
350-354-32				W/clamp nut				
350-357-32				Plain				
350-381-32*1					0.5	Flat (carbide tip)		
350-382-30*1				W/clamp nut				
350-383-32*1				Plain		Spherical (SR4) (carbide tip)		
350-384-32*1				W/clamp nut				
350-361-32*1				Plain		Flat		

Metric

Order No.	Range (mm)	Resolution (mm)	Graduation (mm)	Stem	Stem dia. (mm)	Spindle end	Graduation features	Accuracy (µm)
164-163	0 - 50	0.001	—	Plain	18	Flat (carbide tip)	—	±3
350-251-30	0 - 25		0.01	Plain	10		Standard	±2
350-252-30				W/clamp nut				
350-253-32				Plain		Spherical (SR4) (carbide tip)		
350-254-32				W/clamp nut				
350-281-30*1				Plain	12	Flat (carbide tip)		
350-282-30*1				W/clamp nut				
350-283-32*1				Plain		Spherical (SR4) (carbide tip)		
350-284-32*1				W/clamp nut				
350-261-32*1				Plain		Flat		
350-271-32*1								
350-272-32				W/clamp nut				
350-273-32*1				Plain		Spherical (SR4) (carbide tip)		
350-274-32				W/clamp nut				

- Power source for **series 350**: SR44 battery (1 pc.), **938882** included as standard (for operational checks)
  Power source for **series 164**: SR44 battery (2 pcs.), **938882** included as standard (for operational checks)
- Battery life: Approx. 2.4 years under normal use (for **350-XXX**)
  Approx. 1.8 years under normal use (for **164-XXX**)
- Satin-chrome plated

*1 IP65 dust/water protection type.

DIMENSIONS

Plain Stem

Unit: mm

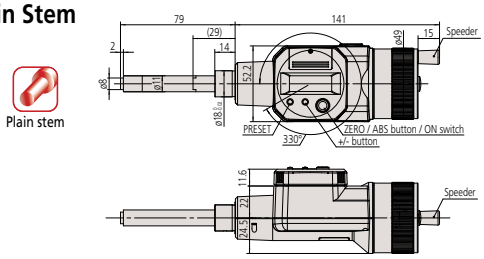

Plain stem

164-163 Rotatable display Mass: 490 g

( ): with spindle fully retracted.

Mitutoyo

Micrometer Head

Digimatic Micrometer Heads
SERIES 164, 350

B

DIMENSIONS

Plain Stem

Unit: mm

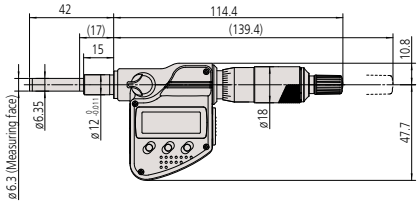

350-281-30
(Stem dia. 12 mm, water-proof type) Mass: 230 g

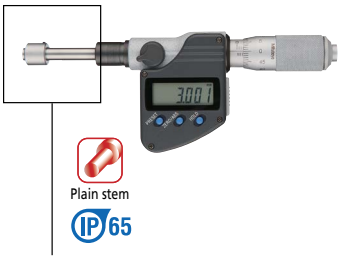

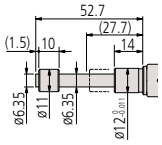

Equipped with a non-rotating device
350-261-32
(Stem dia. 12 mm, water-proof type)
Mass: 235 g

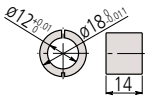

Bushings (standard accessory)
350-261-32

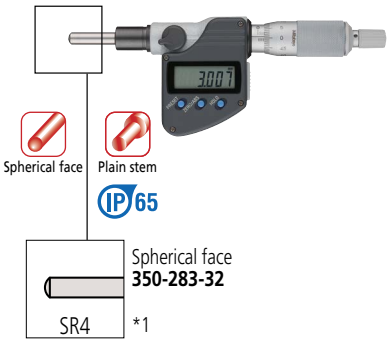

Spherical face
350-283-32
*1

*1 Other dimensions are the same as **350-281-30**.
( ): with spindle fully retracted.

Stem locknut

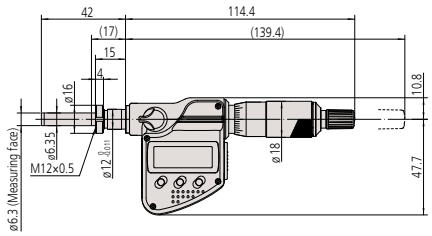

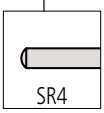

Spherical face
350-284-32
*2

- Fixture thickness: 11.5 mm
  350-282-30 (Stem dia. 12 mm, equipped with locknut, water-proof type) Mass: 230 g

*2 Other dimensions are the same as **350-282-30**.
( ): with spindle fully retracted.

Find a Distributor

DIMENSIONS

Plain Stem

Unit: mm

Plain stem

Plain stem

Spherical face

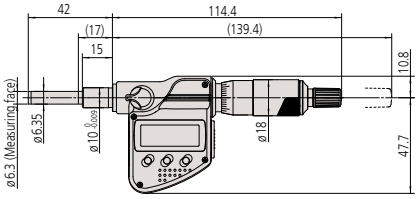

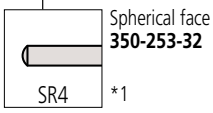

Spherical face
350-253-32
*1

350-251-30
(Stem dia. 10 mm, for general use) Mass: 230 g

*1 Other dimensions are the same as **350-251-30**.
( ): with spindle fully retracted.

Stem Locknut

Stem locknut

Stem locknut

Spherical face

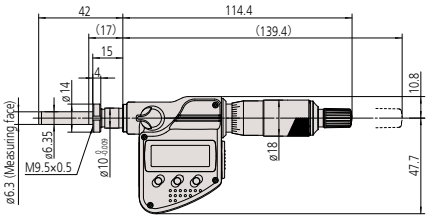

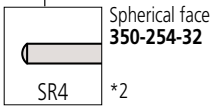

Spherical face
350-254-32
*2

- Fixture thickness: 11.5 mm

350-252-30
(Stem dia. 10 mm, for general use) Mass: 230 g

*2 Other dimensions are the same as **350-252-30**.
( ): with spindle fully retracted.

Micrometer Head

Micrometer Heads
SERIES 148 — Small/Ultra-small Type

- Miniature and light-weight micrometer heads for easier incorporation into machines, jigs and fixtures.

B

SPECIFICATIONS

Inch

Order No.	Range (in)	Stem dia. (in)	Stem	Spindle end	Type	Accuracy (in)
148-217	0 - 0.2	0.156	Plain	Spherical (SR1.5)	Standard	±0.00025
148-218			W/clamp nut			
148-202-10	0 - 0.25	0.25	Plain	Flat		
148-204-10			W/clamp nut			
148-206-10			Plain	Spherical (SR3)		
148-208-10			W/clamp nut			
148-210-10			Plain	Flat	Reverse reading	
148-212-10			W/clamp nut			

Metric

Order No.	Range (mm)	Stem dia. (mm)	Stem	Spindle end	Type	Accuracy (µm)
148-215	0 - 5	3.5	Plain	Spherical (SR1.5)	Standard	±5
148-216			W/clamp nut			
148-201-10	0 - 6.5	6	Plain	Flat		
148-203-10			W/clamp nut			
148-205-10			Plain	Spherical (SR3)		
148-207-10			W/clamp nut			
148-209-10			Plain	Flat	Reverse reading	
148-211-10			W/clamp nut			

- Graduation: 0.02 mm (**148-215**, **148-216**), 0.01 mm or 0.001 in
- Measuring face: Material/Alloy tool steel, Hardness/60 HRC or more, Lapped
- Satin-chrome plated

DIMENSIONS

Plain Stem

Unit: mm

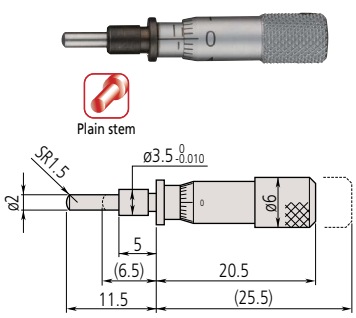

148-215 Mass: 4 g

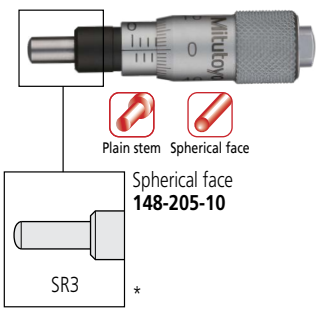

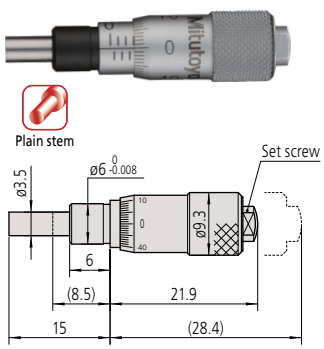

148-201-10 Mass: 10 g

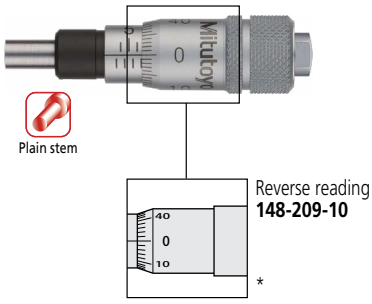

* Other dimensions are the same as **148-201-10**.
( ): with spindle fully retracted.

Mitutoyo
Got Questions?

Micrometer Heads
SERIES 148 — Small/Ultra-small Type

DIMENSIONS

Stem Locknut

Unit: mm

Stem locknut Spherical face

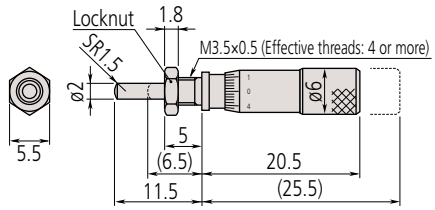

• Fixture thickness: 3 mm
148-216 Mass: 4 g

Stem locknut Spherical face

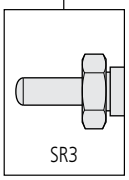

Spherical face
148-207-10

Stem locknut

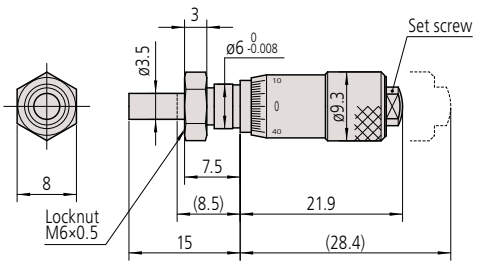

• Fixture thickness: 4 mm
148-203-10 Mass: 10 g

Stem locknut

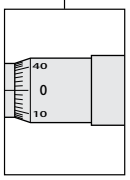

Reverse reading
148-211-10

* Other dimensions are the same as **148-203-10**.
( ): with spindle fully retracted.

Micrometer Head

Micrometer Heads
SERIES 148 — Short Thimble with Multiple Diameter Options

- Short body design maintains measuring range for limited space applications.
- Three types of thimble diameters can be selected depending on applications.

B

148-301-10

148-303-10

148-305-10

SPECIFICATIONS

Inch

Order No.	Range (in)	Graduation (in)	Accuracy (in)	Stem dia. (in)	Stem	Spindle end	Thimble dia. (in)
148-351-10	0 - 0.25	0.001	±0.0001	0.375	Plain	Flat	0.59
148-352-10					W/clamp nut		
148-353-10					Plain		0.79
148-354-10					W/clamp nut		
148-357-10	0 - 0.5				Plain		0.59
148-358-10					W/clamp nut		
148-359-10					Plain		0.79
148-360-10					W/clamp nut		

- Spindle pitch: 0.025 in
- Measuring face: Material/Alloy tool steel, Hardness/60 HRC or more, Lapped
- Satin-chrome plated

Metric

Order No.	Range (mm)	Graduation (mm)	Accuracy (µm)	Stem dia. (mm)	Stem	Spindle end	Thimble dia. (mm)
148-301-10	0 - 6.5	0.01	±2	9.5	Plain	Flat	15
148-302-10					W/clamp nut		
148-303-10					Plain		20
148-304-10					W/clamp nut		
148-313-10					Plain	Spherical (SR4)	15
148-314-10					W/clamp nut		
148-307-10	0 - 13				Plain	Flat	15
148-308-10					W/clamp nut		
148-309-10					Plain		20
148-310-10					W/clamp nut		
148-311-10					Plain		29
148-312-10					W/clamp nut		

- Spindle pitch: 0.5 mm
- Measuring face: Material/Alloy tool steel, Hardness/60 HRC or more, Lapped
- Satin-chrome plated

Talk to Sales

DIMENSIONS

Plain Stem

Unit: mm

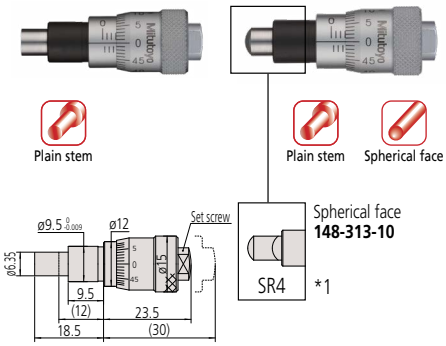

148-301-10
Mass: 26 g
Thimble diameter: 15

*1 Other dimensions are the same as **148-301-10**.

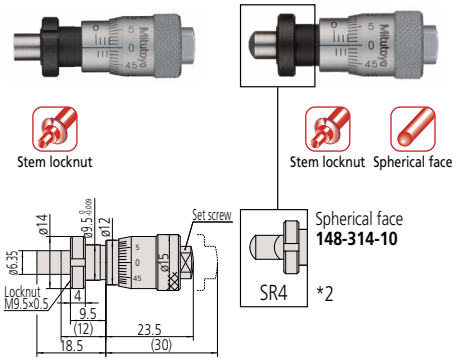

- Fixture thickness: 6 mm

148-302-10
Mass: 26 g
Thimble diameter: 15

*2 Other dimensions are the same as **148-302-10**.

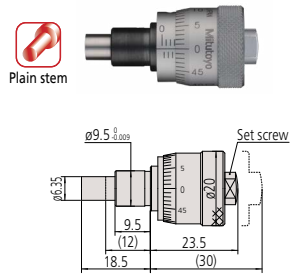

148-303-10
Mass: 39 g
Thimble diameter: 20

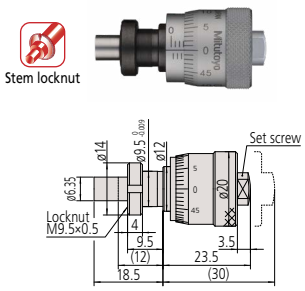

- Fixture thickness: 6 mm

148-304-10
Mass: 39 g
Thimble diameter: 20

( ): with spindle fully retracted.

Micrometer Head

Micrometer Heads
SERIES 148 — Short Thimble with Multiple Diameter Options

DIMENSIONS

Plain Stem | **Stem Locknut** | Unit: mm

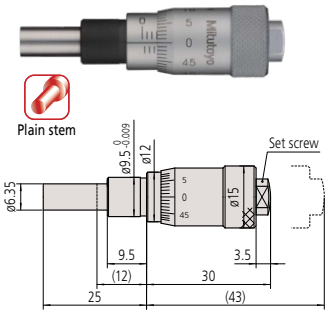

148-307-10
Mass: 35 g Thimble diameter: 15

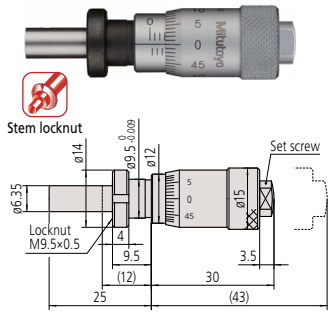

• Fixture thickness: 6 mm
148-308-10
Mass: 35 g Thimble diameter: 15

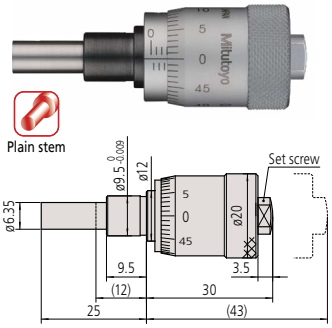

148-309-10
Mass: 55 g Thimble diameter: 20

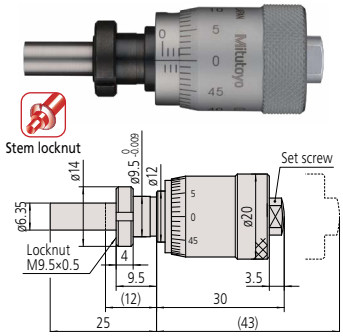

• Fixture thickness: 6 mm
148-310-10
Mass: 55 g Thimble diameter: 20

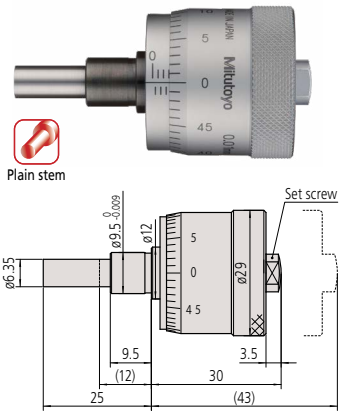

148-311-10
Mass: 103 g Thimble diameter: 29

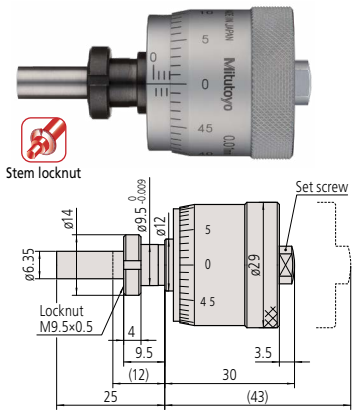

• Fixture thickness: 6 mm
148-312-10
Mass: 103 g Thimble diameter: 29

( ): with spindle fully retracted.

Need Repair?

Micrometer Heads
SERIES 148 — Small Standard Type

- Measuring range: 13 mm

SPECIFICATIONS

Inch

Order No.	Range (in)	Graduation (in)	Accuracy (in)	Stem dia. (in)	Stem	Spindle end	Graduation features
148-112-10	0 - 0.5	0.001	±0.0001	0.375	Plain	Flat	Standard
148-111-10					W/clamp nut		
148-123-10					Plain*1		
148-122-10					W/clamp nut*1		
148-811-10					Plain	Spherical (SR4)	
148-812-10					W/clamp nut		
148-813-10					Plain*1		
148-814-10					W/clamp nut*1		
148-831-10					Plain	Flat	Reverse reading
148-832-10					W/clamp nut		
148-833-10					Plain*1		
148-834-10					W/clamp nut*1		

- Spindle pitch: 0.025 in
- Measuring face: Material/Alloy tool steel, Hardness/60 HRC or more, Lapped
- Satin-chrome plated

*1 With spindle lock

Metric

Order No.	Range (mm)	Graduation (mm)	Accuracy (µm)	Stem dia. (mm)	Stem	Spindle end	Graduation features
148-104-10	0 - 13	0.01	±2	9.5	Plain	Flat	Standard
148-103-10					W/clamp nut		
148-121-10					Plain*		
148-120-10					W/clamp nut*		
148-801-10					Plain	Spherical (SR4)	
148-802-10					W/clamp nut		
148-803-10					Plain*		
148-804-10					W/clamp nut*		
148-821-10					Plain	Flat	Reverse reading
148-822-10					W/clamp nut		
148-823-10					Plain*		
148-824-10					W/clamp nut*		

- Spindle pitch: 0.5 mm
- Measuring face: Material/Alloy tool steel, Hardness/60 HRC or more, Lapped
- Satin-chrome plated

* With spindle lock

Micrometer Head

Micrometer Heads
SERIES 148 — Small Standard Type

DIMENSIONS

Plain Stem Mass: 30 g

Unit: mm

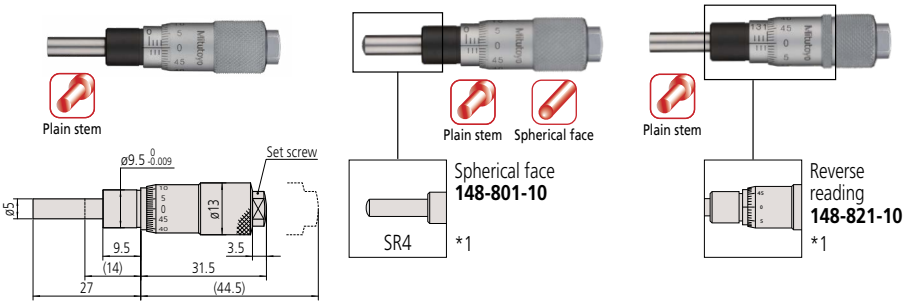

148-104-10

*1 Other dimensions are the same as **148-104-10**.

Plain Stem and Spindle Lock Mass: 40 g

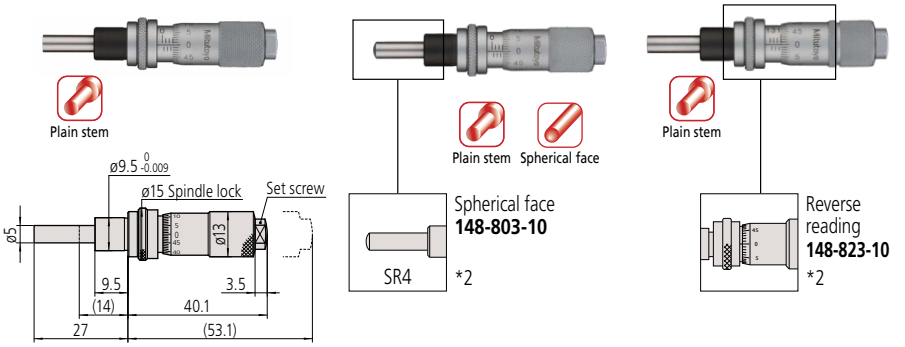

148-121-10

*2 Other dimensions are the same as **148-121-10**.

( ): with spindle fully retracted.

Where to Buy

DIMENSIONS

Stem Locknut

Mass: 35 g

Unit: mm

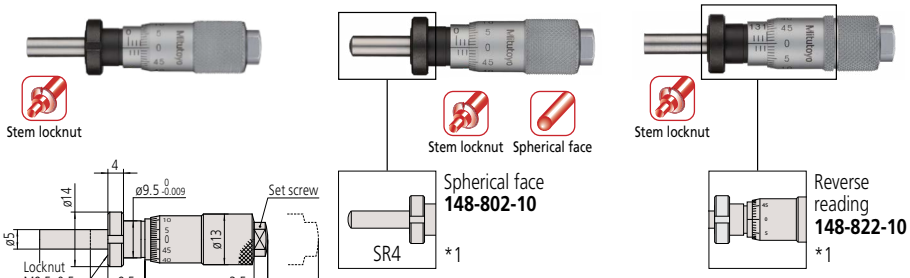

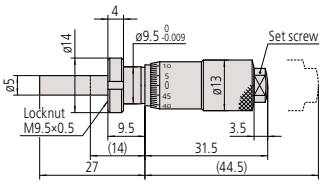

*1 Other dimensions are the same as **148-103-10**.

- Fixture thickness: 6 mm
  148-103-10

Stem Locknut and Spindle Lock

Mass: 45 g

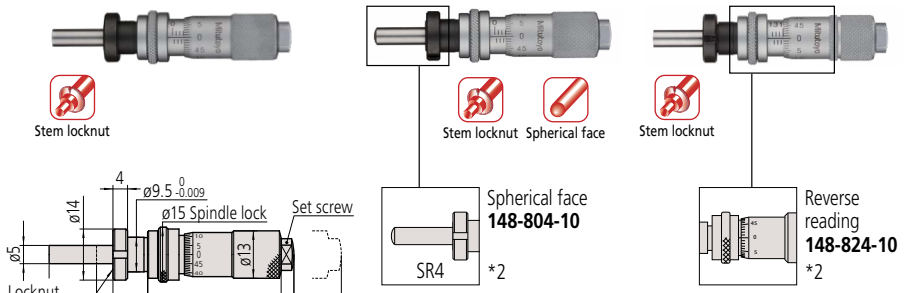

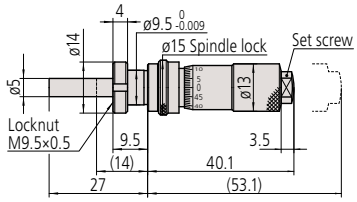

- Fixture thickness: 6 mm
  148-120-10

*2 Other dimensions are the same as **148-120-10**.

( ): with spindle fully retracted.

Micrometer Head

Micrometer Heads
SERIES 148 — Small Thimble Diameter Standard Type

- Measuring range: .5 in or 13 mm
- The thimble can be set to zero at any position by loosening the set screw.

B

SPECIFICATIONS

Inch

Order No.	Range (in)	Graduation (in)	Accuracy (in)	Stem dia. (in)	Stem	Spindle end	Special features
148-501	0 - 0.5	0.001	±0.0001	0.375	Plain	Flat	Standard
148-507					W/clamp nut		
148-505					Plain*1		
148-502					W/clamp nut*1		
148-851					Plain	Spherical (SR4)	
148-852					W/clamp nut*1		
148-861					Plain	Flat	Reverse reading
148-862					W/clamp nut*1		

- Spindle pitch: 0.025 in
- Measuring face: Material/Alloy tool steel, Hardness/60 HRC or more, Lapped
- Satin-chrome plated

*1 With spindle lock

Metric

Order No.	Range (mm)	Graduation (mm)	Accuracy (µm)	Stem dia. (mm)	Stem	Spindle end	Special features
148-503	0 - 13	0.01	±2	9.5	Plain	Flat	Standard
148-508					W/clamp nut		
148-506					Plain*1		
148-504					W/clamp nut*1		
148-853					Plain	Spherical (SR4)	
148-854					W/clamp nut*1		
148-863					Plain	Flat	Reverse reading
148-864					W/clamp nut*1		
148-858*2					W/clamp nut	Spherical (SR4)	Standard
148-866*2					Plain*1	Flat	Reverse reading
148-856*2					Plain*1	Spherical (SR4)	Standard
148-868*2					W/clamp nut	Flat	Reverse reading

- Spindle pitch: 0.5 mm
- Measuring face: Material/Alloy tool steel, Hardness/60 HRC or more, Lapped
- Satin-chrome plated

*1 With spindle lock
*2 Made-to-order models

Get a Quote

DIMENSIONS

Plain Stem

Mass: 35 g

Unit: mm

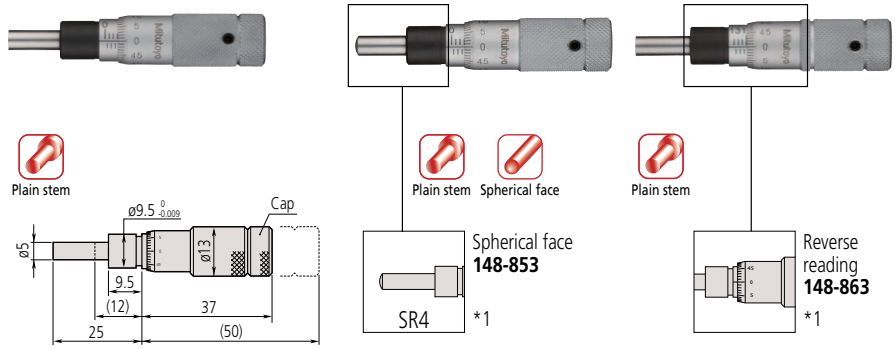

148-503

*1 Other dimensions are the same as **148-503**.

Plain Stem and Spindle Lock

Mass: 35 g

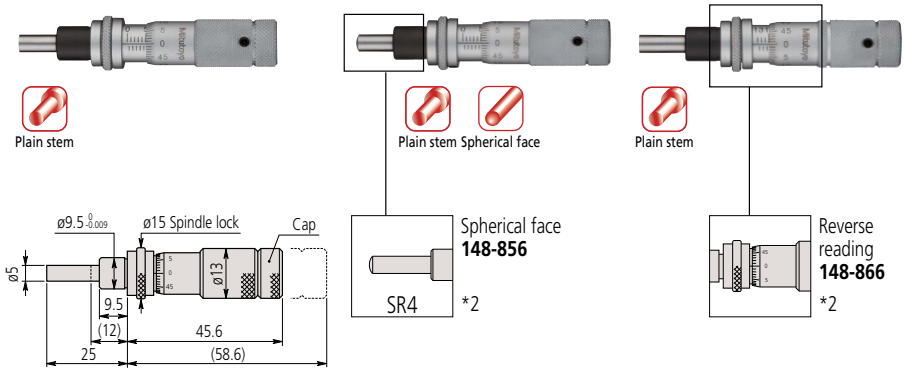

148-506

*2 Other dimensions are the same as **148-506**.

( ): with spindle fully retracted.

Micrometer Head

Micrometer Heads
SERIES 148 — Small Thimble Diameter Standard Type

B

DIMENSIONS

Stem Locknut Mass: 40 g

Unit: mm

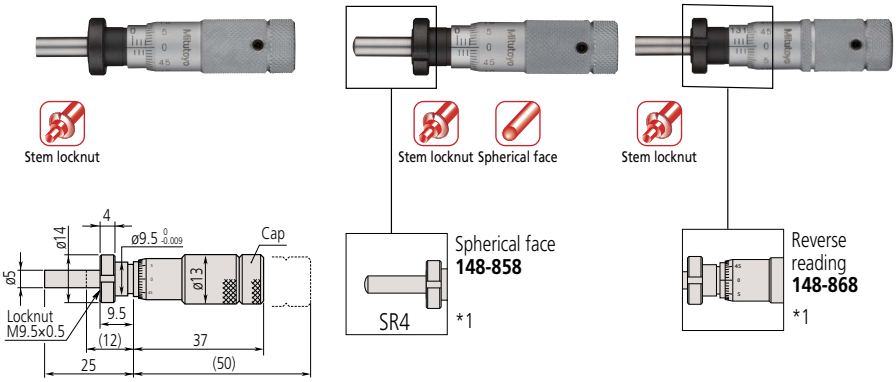

• Fixture thickness: 6 mm
148-508

*1 Other dimensions are the same as **148-508**.

Stem Locknut and Spindle Lock Mass: 40 g

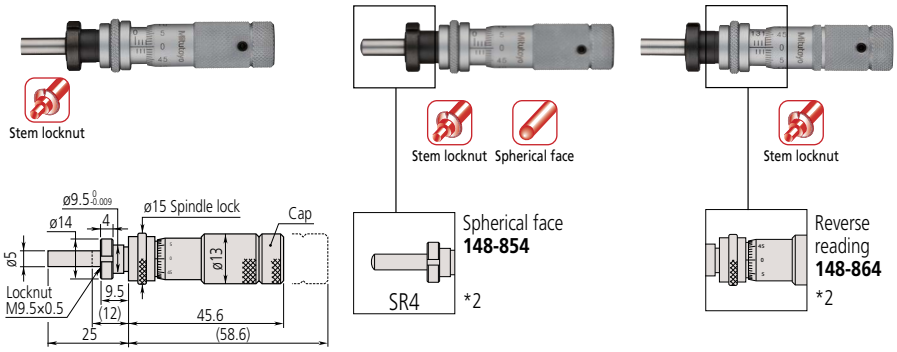

• Fixture thickness: 6 mm
148-504

*2 Other dimensions are the same as **148-504**.
( ): with spindle fully retracted.

Need Support?

Micrometer Heads
SERIES 148 — Locking-screw Type

- This model with enhanced clamping force created by a locking screw can be reliably used on positioning equipment or instruments constantly exposed to vibration.
- Position of the locking screw is the same as the sleeve index line.

Secure spindle

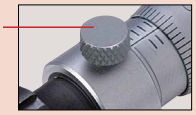

SPECIFICATIONS

Inch

Order No.	Range (in)	Graduation (in)	Stem dia. (in)	Stem	Spindle end	Graduation features	Accuracy (in)
148-230-10	0 - 0.25	0.001	0.25	Plain	Flat	Standard	±0.00025
148-231-10				W/clamp nut			
148-232-10				Plain	Spherical (SR3)		
148-233-10				W/clamp nut			
148-160-10	0 - 0.5		0.375	Plain	Flat		±0.0001
148-161-10				W/clamp nut			
148-162-10				Plain	Spherical (SR4)		
148-163-10				W/clamp nut			
148-326-10	0 - 0.25			Plain	Flat		
148-327-10				W/clamp nut			
148-328-10				Plain	Spherical (SR4)		
148-329-10				W/clamp nut			

- Measuring face: Material/Alloy tool steel, Hardness/60 HRC or more, Lapped
- Satin-chrome plated

Metric

Order No.	Range (mm)	Graduation (mm)	Stem dia. (mm)	Stem	Spindle end	Graduation features	Accuracy (µm)
148-220-10	0 - 6.5	0.01	6	Plain	Flat	Standard	±5
148-221-10				W/clamp nut			
148-222-10				Plain	Spherical (SR3)		
148-223-10				W/clamp nut			
148-150-10	0 - 13		9.5	Plain	Flat		±2
148-151-10				W/clamp nut			
148-152-10				Plain	Spherical (SR4)		
148-153-10				W/clamp nut			
148-316-10	0 - 6.5			Plain	Flat		
148-317-10				W/clamp nut			
148-318-10				Plain	Spherical (SR4)		
148-319-10				W/clamp nut			

- Measuring face: Material/Alloy tool steel, Hardness/60 HRC or more, Lapped
- Satin-chrome plated

Mitutoyo

Micrometer Head

Micrometer Heads
SERIES 148 — Locking-screw Type

DIMENSIONS

Unit: mm

Plain Stem

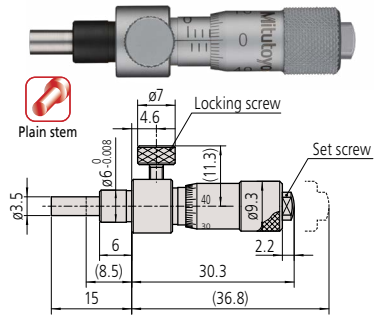

148-220-10 Mass: 16 g

Stem Locknut

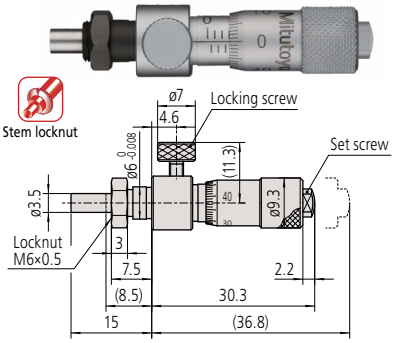

• Fixture thickness: 4 mm
148-221-10 Mass: 17 g

Plain Stem

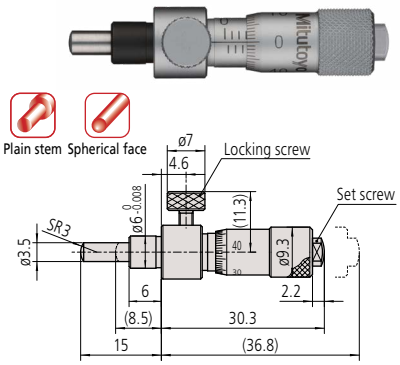

Spherical face (SR3)
148-222-10 Mass: 16 g

Stem Locknut

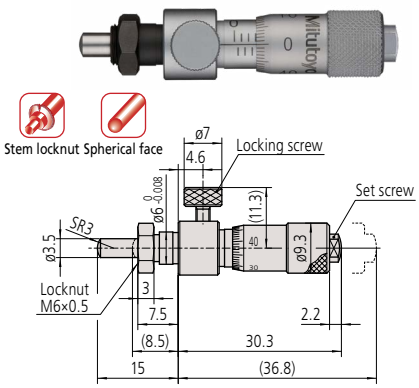

Spherical face (SR3) • Fixture thickness: 4 mm
148-223-10 Mass: 17 g

( ): with spindle fully retracted.

Need Service?

DIMENSIONS

Unit: mm

Plain Stem

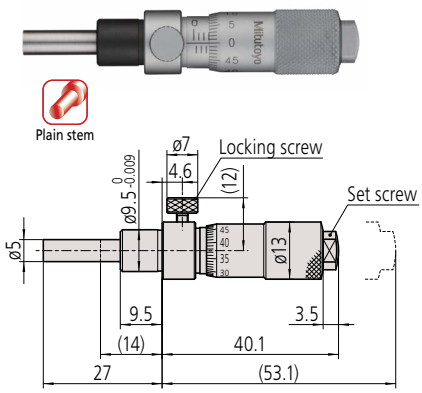

148-150-10 Mass: 40 g

Stem Locknut

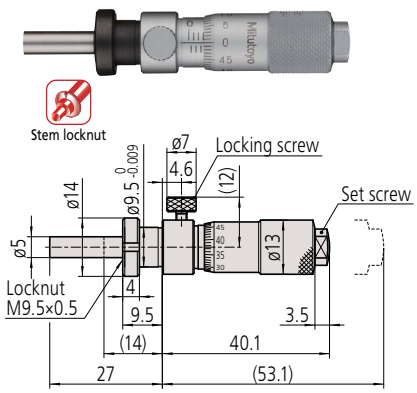

• Fixture thickness: 6 mm
148-151-10 Mass: 43 g

Plain Stem

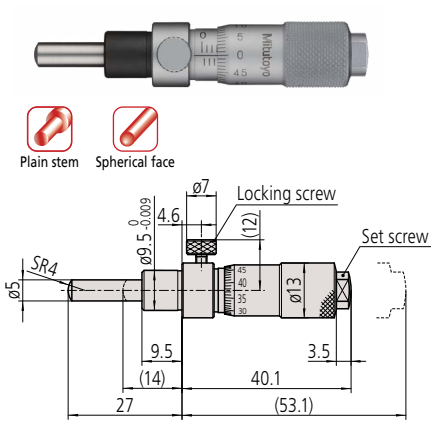

Spherical face (SR4)
148-152-10 Mass: 40 g

Stem Locknut

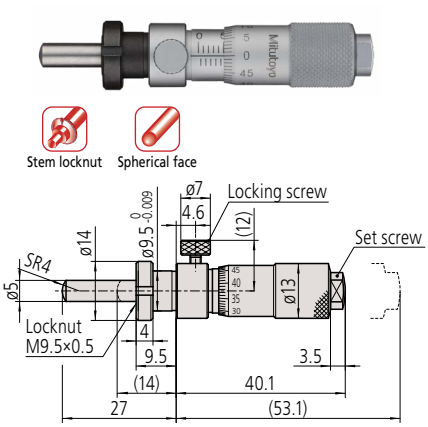

Spherical face (SR4) • Fixture thickness: 6 mm
148-153-10 Mass: 43 g

( ): with spindle fully retracted.

Micrometer Head

Micrometer Heads
SERIES 148 — Locking-screw Type

B

DIMENSIONS

Unit: mm

Plain Stem

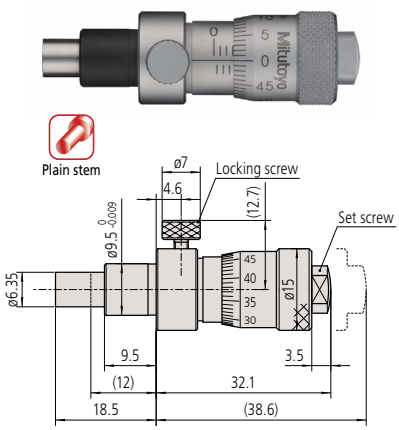

148-316-10 Mass: 40 g

Stem Locknut

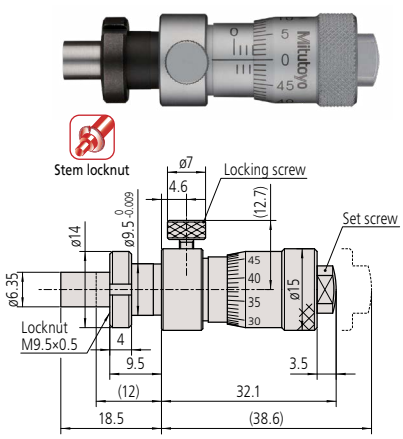

• Fixture thickness: 6 mm
148-317-10 Mass: 43 g

Plain Stem

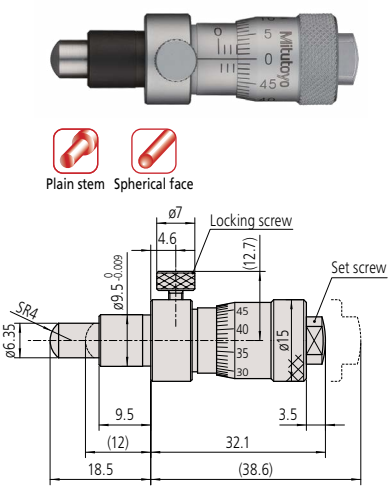

Spherical surface (SR4)
148-318-10 Mass: 40 g

Stem Locknut

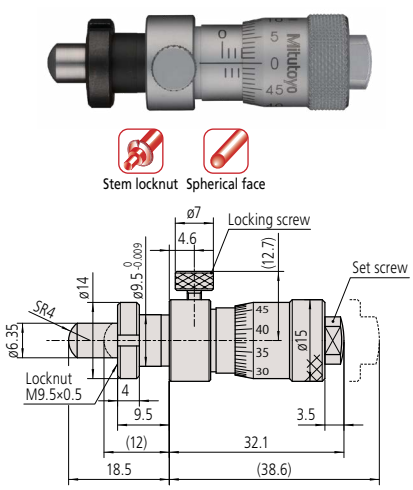

Spherical surface (SR4) • Fixture thickness: 6 mm
148-319-10 Mass: 43 g

( ): with spindle fully retracted.

Need Calibration?

Spindle Pitch

Pitch=0.1 mm

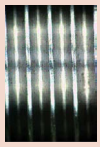

Pitch=0.5 mm

Typical Applications

- Semiconductor-wafer positioning machinery and optical component alignment units, etc.
- Precision X-Y table positioning

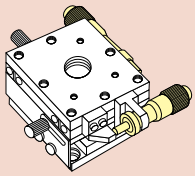

- Precision adjustment of mirror in holder

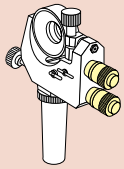

Precision adjustment of mirror in holder

Comparison of Mounting Dimensions Between a Fine-pitch Head and a Standard-pitch Head at the Mid-range Travel Position.

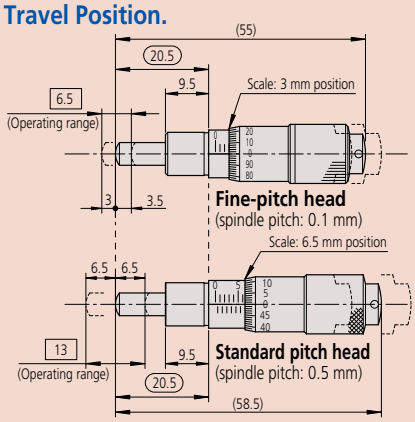

Note: While the fine-pitch micrometer head has a measuring range of 6.5 mm, the standard head has a larger range of 13 mm.
When replacing a standard head, the fine-pitch type can use the common range in the middle of the spindle travel. The standard and compact types of fine-pitch head are otherwise completely interchangeable.

Micrometer Heads
SERIES 148 — Fine Spindle Feed of 0.1 mm/rev

- Fine spindle feeding of just 0.1 mm/rev (one fifth compared with standard model). Suitable for extra-fine adjustment and positioning.
- External dimensions are compatible with standard 0.5 mm pitch heads.
- Suitable for the fine feeding of precision stages on semiconductor equipment and optical-axis alignment device.

SPECIFICATIONS

Metric

Order No.	Range (mm)	Graduation (mm)	Stem dia. (mm)	Stem	Spindle end	Spindle pitch (mm)	Maximum permissible error J_{MPE} (µm)	Special features
148-142-10	0 - 6.5	0.002	9.5	Plain	Spherical (SR4)	0.1	±2	—
148-143-10				W/clamp nut				
148-342-10				Plain				Thicker & shorter thimble
148-343-10				W/clamp nut				
148-242-10			6	Plain	Spherical (SR3)		±5	Small thimble diameter
148-243-10				W/clamp nut				
148-244	0 - 5	0.004	3.5	Plain	Spherical (SR1.5)			
148-245				W/clamp nut				

- Measuring face: Material/Alloy tool steel, Hardness/60 HRC or more, Lapped
- Satin-chrome plated

DIMENSIONS

Plain Stem

Unit: mm

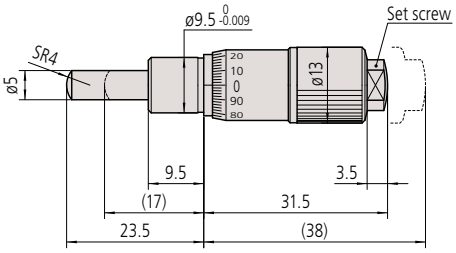

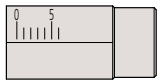

Sleeve marker

148-142-10 Mass: 31 g

Stem Locknut

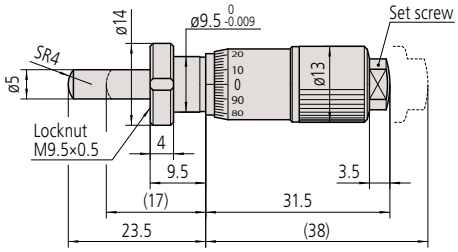

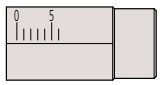

Sleeve marker

- Fixture thickness: 6 mm

148-143-10 Mass: 34 g

( ): with spindle fully retracted.

Micrometer Head

Micrometer Heads
SERIES 148 — Fine Spindle Feed of 0.1 mm/rev

DIMENSIONS

Unit: mm

Plain Stem

Plain stem Spherical face

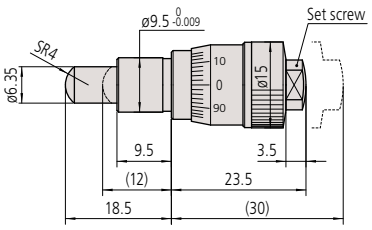

148-342-10 Mass: 29 g

Stem Locknut

Stem locknut Spherical face

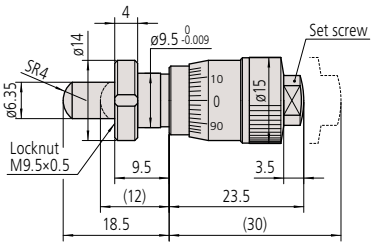

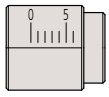

Sleeve marker

• Fixture thickness: 6 mm
148-343-10 Mass: 31 g

Plain Stem

Plain stem Spherical face

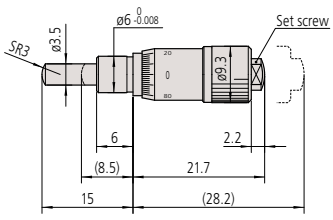

148-242-10 Mass: 10 g

Stem Locknut

Stem locknut Spherical face

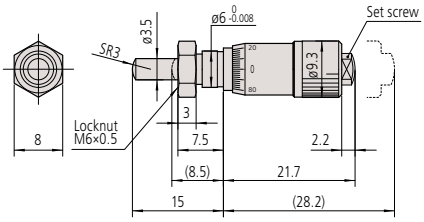

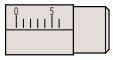

Sleeve marker

• Fixture thickness: 4 mm
148-243-10 Mass: 10 g

Plain Stem

Plain stem Spherical face

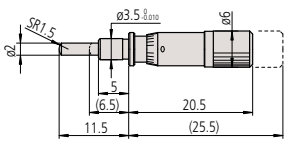

148-244 Mass: 4 g

Stem Locknut

Stem locknut Spherical face

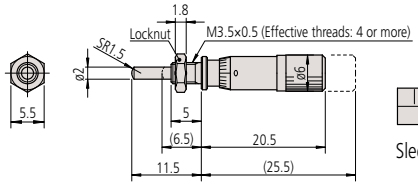

Sleeve marker

• Fixture thickness: 3 mm
148-245 Mass: 5 g

( ): with spindle fully retracted.

Find a Distributor

Micrometer Heads
SERIES 148 — Fine Spindle Feed of 0.25 mm/rev

- Fine spindle feeding of just 0.25 mm/rev for fine adjustment and positioning.

SPECIFICATIONS

Metric

Order No.	Range (mm)	Graduation (mm)	Stem dia. (mm)	Stem	Spindle end	Spindle pitch (mm)	Accuracy (µm)
148-132-10	0 - 13	0.01	9.5	Plain	Spherical (SR4)	0.25	±2
148-133-10				W/clamp nut			
148-322-10	0 - 6.5			Plain			
148-323-10				W/clamp nut			

- Measuring face: Material/Alloy tool steel, Hardness/60 HRC or more, Lapped
- Satin-chrome plated

DIMENSIONS

Plain Stem Unit: mm

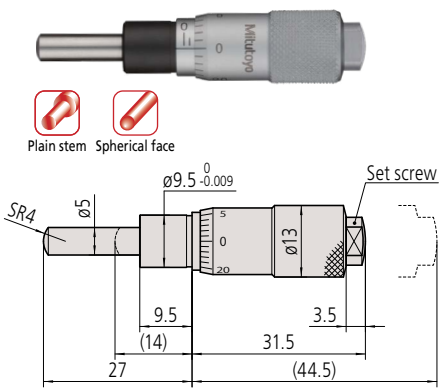

148-132-10 Mass: 30 g

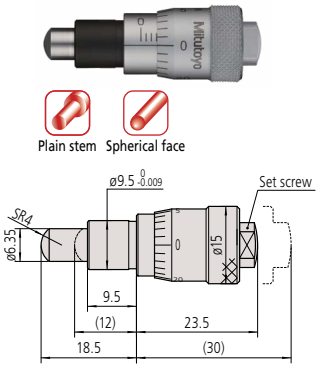

148-322-10 Mass: 30 g

Stem Locknut

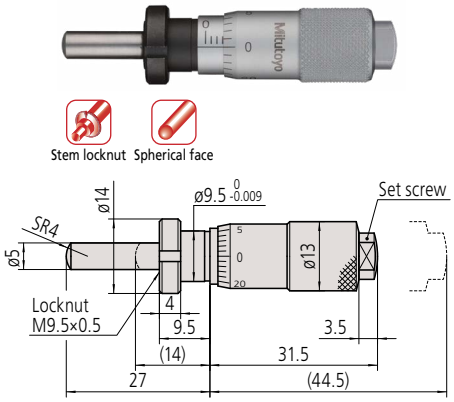

- Fixture thickness: 6 mm

148-133-10 Mass: 35 g

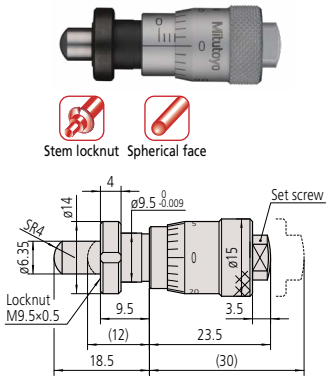

- Fixture thickness: 6 mm

148-323-10 Mass: 35 g

( ): with spindle fully retracted.

Micrometer Head

Micrometer Heads
SERIES 110 — Differential Screw Thread Translator (Extra-Fine Feed) Type

- Differential movements of spindle threads and units allow extra-fine spindle feeding (down to 0.025 mm/rev, .001 in/rev), resulting in high-resolution measurements.

B

110-502-10

110-504-10

SPECIFICATIONS

Inch

Order No.	Range (in)		Graduation (in)		Graduation features
110-111	0 - 0.05		0.00002		Standard
110-112			0.000005		Fine
110-115-10	0 - 0.02		0.00002		Standard
110-116-10			0.000005		Fine
110-117-10			0.00002		Standard
110-118-10			0.000005		Fine
110-504-10	Thimble (fine)	0 - 0.006	Thimble (fine)	0.00002	Dual scales; 0.2 mm/0.006 in fine-feed range
	Thimble (coarse)	0 - 0.5	Thimble (coarse)	0.001	

Order No.	Stem dia. (in)	Stem	Spindle end	Accuracy*1 (in)
110-111	0.5	W/clamp nut	Flat (carbide tip)	±0.00025/±0.00006
110-112				
110-115-10				±0.00015/±0.00006
110-116-10				
110-117-10			Spherical (SR10) (carbide tip)	
110-118-10				
110-504-10	0.375		Spherical	±0.00015/±0.00006

Metric

Order No.	Range (mm)		Graduation (mm)		Graduation features
110-101	0 - 2.5		0.001		Standard
110-102			0.0001		Fine
110-105-10	0 - 1		0.001		Standard
110-106-10			0.0001		Fine
110-107-10			0.001		Standard
110-108-10			0.0001		Fine
110-502-10	Thimble (fine)	0 - 0.2	Thimble (fine)	0.0005	Dual scales; 0.2 mm fine-feed range
	Thimble (coarse)	0 - 13	Thimble (coarse)	0.01	

Order No.	Stem dia. (mm)	Stem	Spindle end	Accuracy*1 (µm)
110-101	12	W/clamp nut	Flat (carbide tip)	±5/±1.5
110-102				
110-105-10				±3/±1.5
110-106-10				
110-107-10			Spherical (SR10) (carbide tip)	
110-108-10				
110-502-10	9.5		Spherical	±3/±1.5

- Measuring face: Material/Carbide tip (**110-502-10**/**504-10** are alloy tool steel), Hardness/90 HRA or more (Only **110-502-10**/**504-10** are 60 HRC or more), Lapped
- Satin-chrome plated

*1 Wide range/narrow range (Narrow range: 1 rev)

Got Questions?

DIMENSIONS

Unit: mm

- Differential movement mechanism with double spindle
- Non-rotating spindle
- Fixture thickness: 9.5 mm

Equipped with Vernier scale

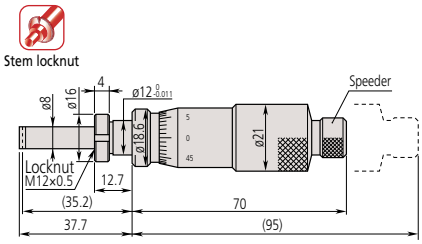

110-101
110-102 Equipped with Vernier scale

- Differential movement mechanism with double spindle
- Non-rotating spindle
- Fixture thickness: 9.5 mm

Equipped with Vernier scale

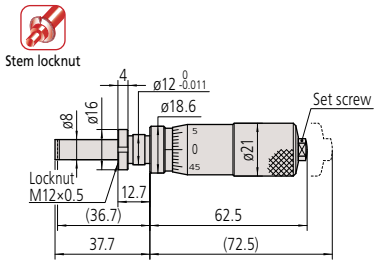

110-105-10
110-106-10 Equipped with Vernier scale Mass: 150 g

- Dual thimble
- Fixture thickness: 11.5 mm

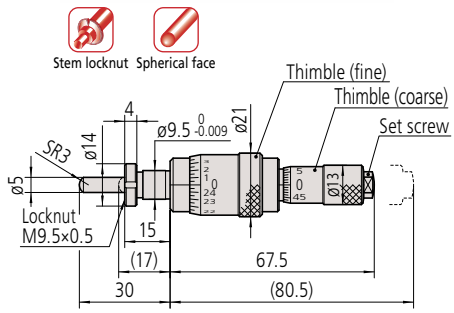

110-502-10 Mass: 95 g

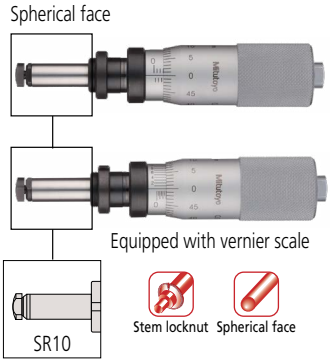

110-107-10
110-108-10 Equipped with Vernier scale

( ): with spindle fully retracted.

Micrometer Head

B

Micrometer Heads
SERIES 149 — Small Standard Type with Carbide-tipped Spindle

- Carbide-tipped spindle provides high abrasion resistance.

SPECIFICATIONS

Inch

Order No.	Range (in)	Graduation (in)	Accuracy (in)	Stem dia. (in)	Stem	Spindle end	Graduation features
149-148-10	0 - 0.5	0.001	±0.0001	0.375	Plain	Flat (carbide tip)	Standard
149-147-10					W/clamp nut		
149-185-10*3					Plain*1		
149-182-10					W/clamp nut*1		
149-811-10					Plain	Spherical (SR4) (carbide tip)	
149-812-10					W/clamp nut		
149-831-10*2					Plain	Flat (carbide tip)	Reverse reading
149-832-10*2					W/clamp nut		
149-181*2					Plain*1		Standard

Metric

Order No.	Range (mm)	Graduation (mm)	Accuracy (µm)	Stem dia. (mm)	Stem	Spindle end	Graduation features
149-132-10	0 - 15	0.01	±2	9.5	Plain	Flat (carbide tip)	Standard
149-131-10					W/clamp nut		
149-183-10					Plain*1		
149-184-10					W/clamp nut*1		
149-801-10					Plain	Spherical (SR4) (carbide tip)	
149-802-10					W/clamp nut		
149-821-10					Plain	Flat (carbide tip)	Reverse reading
149-822-10					W/clamp nut		
149-803-10*2					Plain*1	Spherical (SR4) (carbide tip)	Standard
149-804-10*2					W/clamp nut*1		
149-823-10*2					Plain*1	Flat (carbide tip)	Reverse reading
149-824-10*2					W/clamp nut*1		

- Spindle pitch: 0.5 mm or 0.025 in
- Measuring face: Material/Carbide tip, Hardness/90 HRA or more, Lapped
- Satin-chrome plated

*1 With spindle lock *2 Made-to-order models *3 W/rachet (**149-181**) is available

DIMENSIONS

Plain Stem Mass: 55 g

Unit: mm

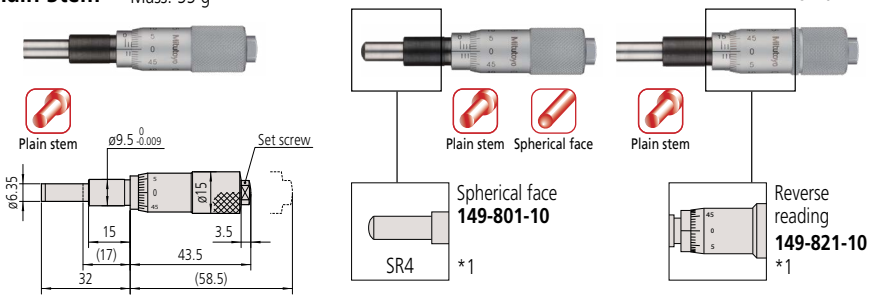

149-132-10

*1 Other dimensions are the same as **149-132-10**.

Plain Stem and Spindle Lock Mass: 55 g

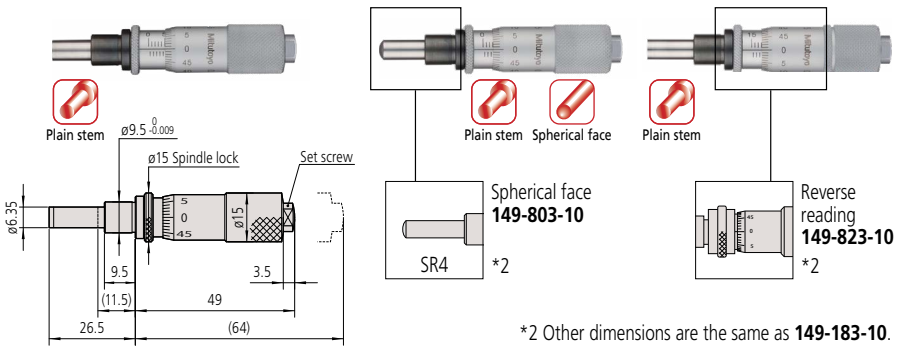

149-183-10

*2 Other dimensions are the same as **149-183-10**.

( ): with spindle fully retracted.

Talk to Sales

Micrometer Heads
SERIES 149 — Small Standard Type with Carbide-tipped Spindle

DIMENSIONS

Stem Locknut Mass: 60 g

Unit: mm

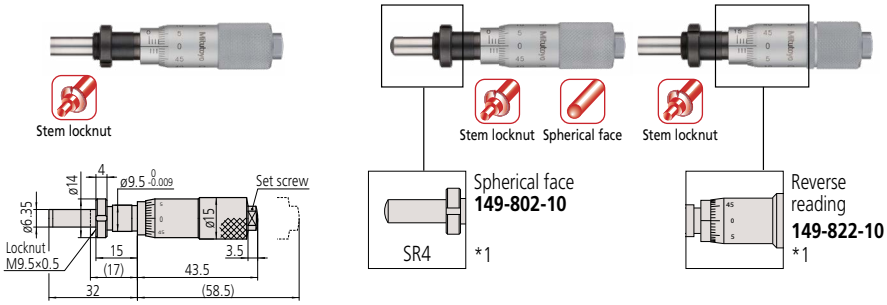

- Fixture thickness: 11.5 mm
  149-131-10

*1 Other dimensions are the same as **149-131-10**.

Stem Locknut and Spindle Lock Mass: 60 g

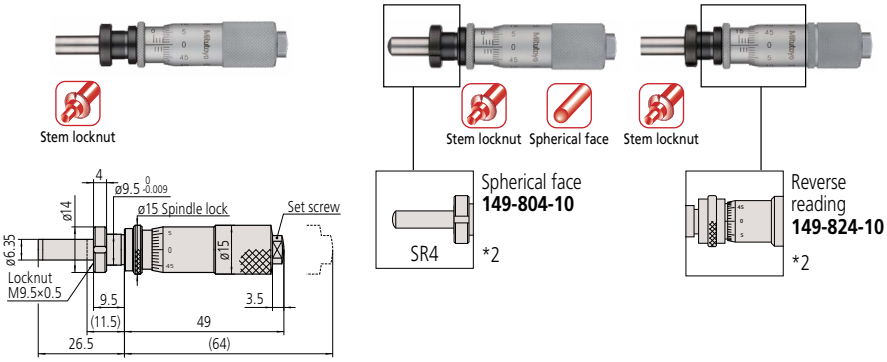

- Fixture thickness: 6 mm
  149-184-10

*2 Other dimensions are the same as **149-184-10**.

( ): with spindle fully retracted.

Mitutoyo

Micrometer Head

Micrometer Heads
SERIES 150 — Medium-sized Standard Type

• Measuring range: 1 in or 25 mm

SPECIFICATIONS

Inch

Order No.	Range (in)	Graduation (in)	Accuracy (in)	Stem dia. (in)	Stem	Spindle end	Special features
150-208	0 - 1	0.001	±0.0001	0.375	Plain	Flat (carbide tip)	Standard
150-207					W/clamp nut		
150-213					Plain*1		
150-214					W/clamp nut*1		
150-811					Plain	Spherical (SR4) (carbide tip)	
150-812					W/clamp nut		
150-831					Plain	Flat (carbide tip)	Reverse graduation
150-832					W/clamp nut		
150-206		0.0001			Plain		W/Vernier (0.0001 in)
150-205					W/clamp nut		
150-215					Plain*1		
150-216					W/clamp nut*1		
150-198-10		0.001			Plain		W/O ratchet stop
150-197-10					W/clamp nut		
150-217-10*2					Plain*1		
150-218-10*2					W/clamp nut*1		

• Spindle pitch: 0.025 in
• Measuring face: Material/Carbide tip (only long spindle model is alloy tool steel),
Hardness/90 HRA or more (only long spindle model is 60 HRC or more), Lapped.
• Satin-chrome plated
*1 With spindle lock
*2 Made-to-order models

Metric

Order No.	Range (mm)	Graduation (mm)	Accuracy (μm)	Stem dia. (mm)	Stem	Spindle end	Special features
150-192	0 - 25	0.01	±2	10	Plain	Flat (carbide tip)	Standard
150-191					W/clamp nut		
150-209					Plain*1		
150-210					W/clamp nut*1		
150-801					Plain	Spherical (SR4) (carbide tip)	
150-802					W/clamp nut		
150-821					Plain	Flat (carbide tip)	Reverse reading
150-822					W/clamp nut		
150-190		0.001			Plain		W/Vernier (0.001 mm)
150-189					W/clamp nut		
150-183*2					Plain*1		
150-184					W/clamp nut*1		
150-196-10		0.01			Plain		W/o ratchet stop
150-195-10					W/clamp nut		
150-211-10					Plain*1		
150-212-10					W/clamp nut*1		
150-803*2					Plain*1	Spherical (SR4) (carbide tip)	Standard
150-804*2					W/clamp nut*1		
150-823*2					Plain*1	Flat (carbide tip)	Reverse reading
150-824*2					W/clamp nut*1		

• Spindle pitch: 0.5 mm
• Measuring face: Material/Carbide tip (Only long spindle model is alloy tool steel),
Hardness/90 HRA or more (Only long spindle model is 60 HRC or more), Lapped.
• Satin-chrome plated
*1 With spindle lock
*2 Made-to-order models

Need Repair?

Micrometer Heads
SERIES 150 — Medium-sized Standard Type

DIMENSIONS

Unit: mm

Plain Stem

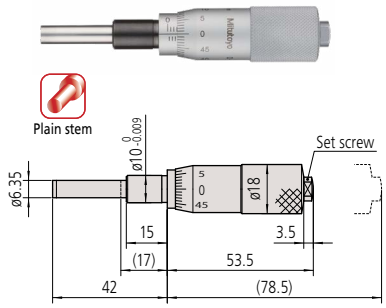

150-196-10 Mass: 95 g

Plain Stem and Spindle Lock

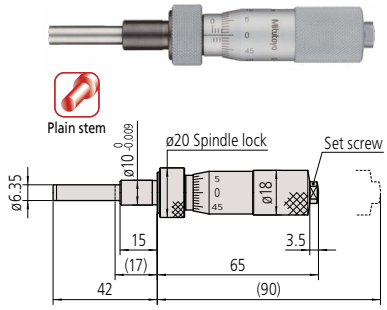

150-211-10 Mass: 115 g

Stem Locknut

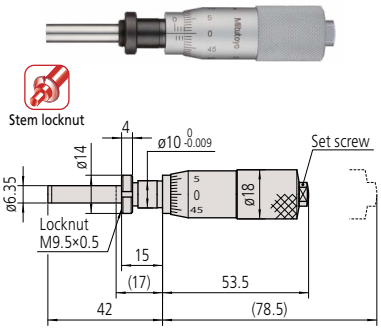

Fixture thickness: 11.5 mm
150-195-10 Mass: 110 g

Stem Locknut and Spindle Lock

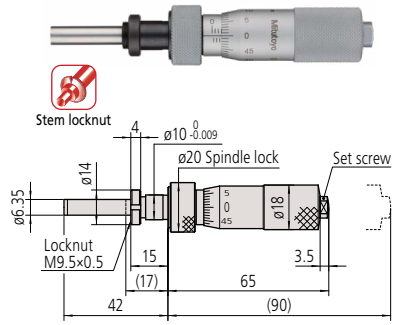

Fixture thickness: 11.5 mm
150-212-10 Mass: 115 g

( ): with spindle fully retracted.

Micrometer Head

DIMENSIONS

( ): with spindle fully retracted. Unit: mm

Plain Stem Mass: 95 g

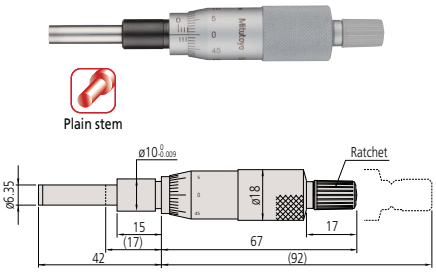

150-192

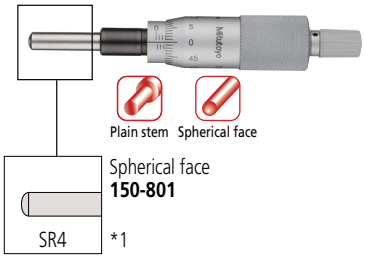

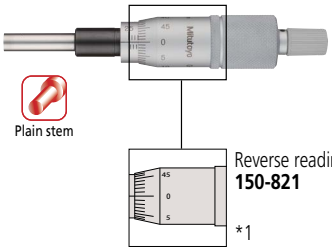

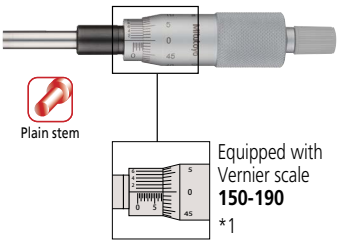

*1 Other dimensions are the same as **150-192**.

Stem Locknut Mass: 100 g

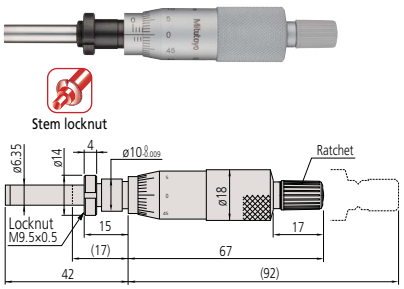

• Fixture thickness: 11.5 mm

150-191

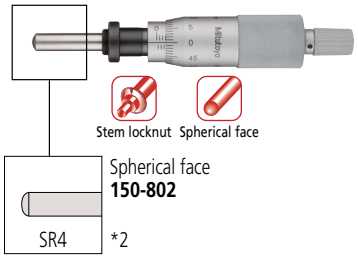

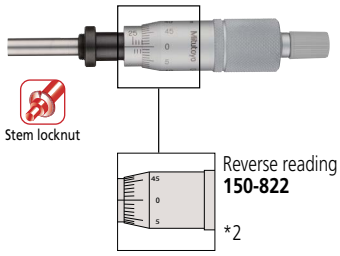

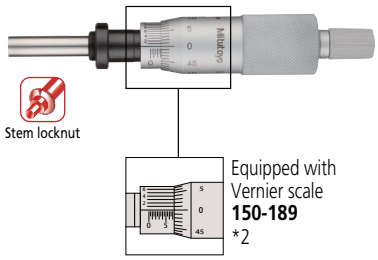

*2 Other dimensions are the same as **150-191**.

Where to Buy

Micrometer Heads
SERIES 150 — Medium-sized Standard Type

DIMENSIONS

( ): with spindle fully retracted. Unit: mm

Plain Stem and Spindle Lock Mass: 110 g

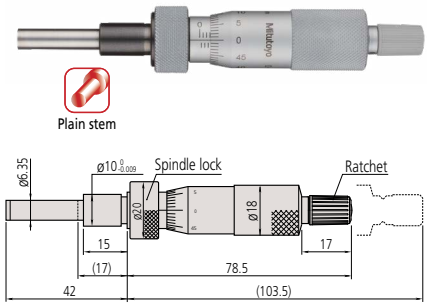

150-209

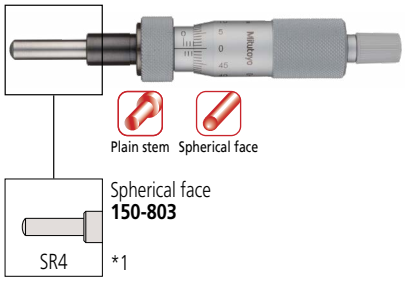

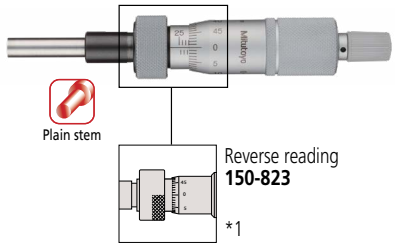

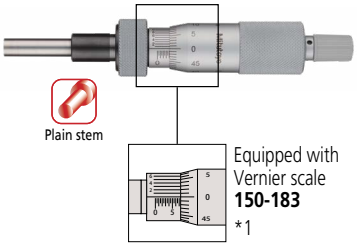

*1 Other dimensions are the same as **150-209**.

Stem Locknut and Spindle Lock Mass: 115 g

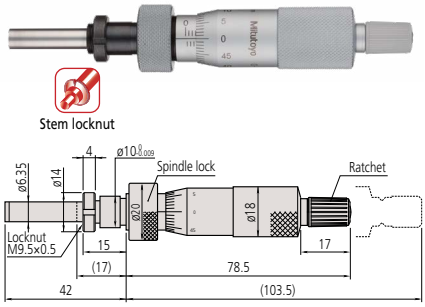

• Fixture thickness: 11.5 mm
150-210

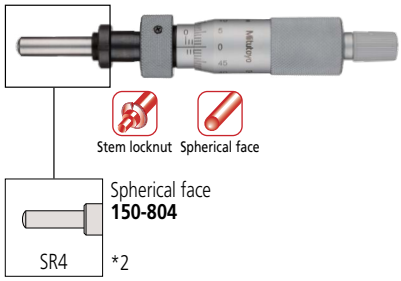

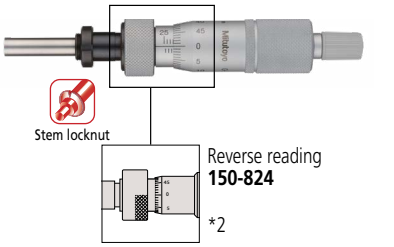

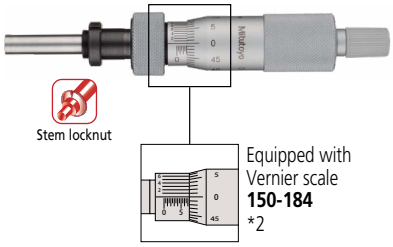

*2 Other dimensions are the same as **150-210**.

Micrometer Head

Micrometer Heads
SERIES 151 — Medium-sized Standard Type with 8 mm Diameter Spindle

- Larger spindle (ø8 mm) for heavy-duty applications (normally ø6.35 mm).

B

SPECIFICATIONS

Inch

Order No.	Range (in)	Graduation (in)	Accuracy (in)	Stem dia. (in)	Stem	Spindle end	Special features
151-240	0 - 1	0.001	±0.0001	0.5	Plain	Flat (carbide tip)	—
151-239					W/clamp nut		
151-238		0.0001			Plain		W/Vernier (0.0001 in)
151-237					W/clamp nut		
151-241-10		0.001			Plain*1		W/o ratchet stop
151-242-10					W/clamp nut*1		
151-243-10					Plain*1		W/o ratchet stop (0.0001 in)
151-244-10					W/clamp nut*1		
151-272	0 - 2		±0.0002		Plain		—
151-271					W/clamp nut		

- Spindle pitch: 0.025 in
- Measuring face: Material/Carbide tip, Hardness/90 HRA or more, Lapped
- Satin-chrome plated

*1 With spindle lock

Metric

Order No.	Range (mm)	Graduation (mm)	Accuracy (µm)	Stem dia. (mm)	Stem	Spindle end	Special features
151-224	0 - 25	0.01	±2	12	Plain	Flat (carbide tip)	—
151-223					W/clamp nut		
151-214					Plain*1		
151-213					W/clamp nut*1		
151-222		0.001			Plain		W/Vernier (0.001 mm)
151-221					W/clamp nut		
151-212*2					Plain*1		
151-211					W/clamp nut*1		
151-227-10		0.01			Plain		W/o ratchet stop
151-228-10					W/clamp nut		
151-225-10					Plain*1		
151-226-10					W/clamp nut*1		
151-256	0 - 50		±4		Plain		—
151-255					W/clamp nut		
151-260-10					Plain		W/o ratchet stop
151-259-10					W/clamp nut		

- Spindle pitch: 0.5 mm
- Measuring face: Material/Carbide tip, Hardness/90 HRA or more, Lapped
- Satin-chrome plated

*1 With spindle lock
*2 Made-to-order models

Get a Quote

Micrometer Heads
SERIES 151 — Medium-sized Standard Type with 8 mm Diameter Spindle

DIMENSIONS

Unit: mm

Plain Stem

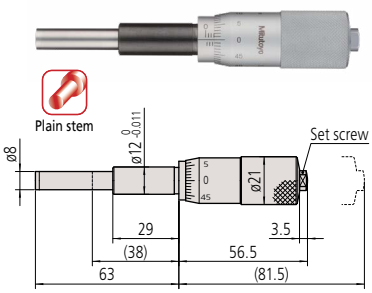

151-227-10 Mass: 150 g

Plain Stem and Spindle Lock

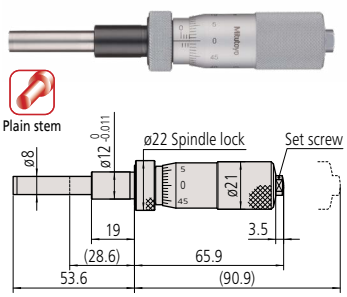

151-225-10 Mass: 165 g

Stem Locknut

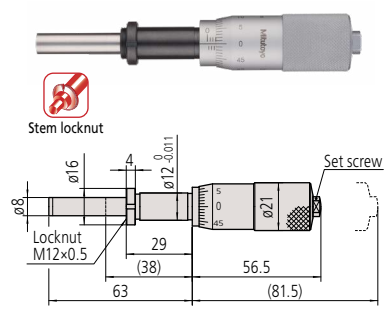

• Fixture thickness: 25.5 mm
151-228-10 Mass: 155 g

Stem Locknut and Spindle Lock

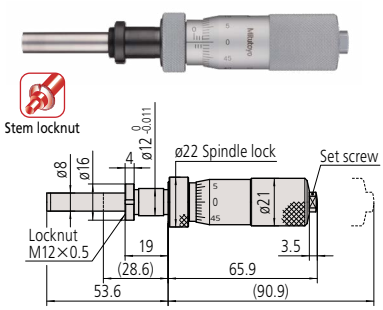

• Fixture thickness: 15.5 mm
151-226-10 Mass: 165 g

( ): with spindle fully retracted.

Micrometer Head

DIMENSIONS

Plain Stem

Unit: mm

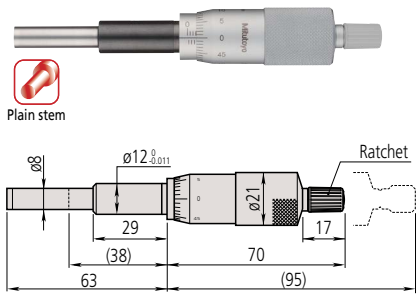

151-224 Mass: 150 g

Equipped with Vernier scale
151-222

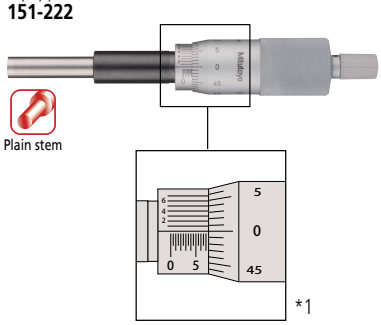

*1 Other dimensions are the same as **151-224**.

Stem Locknut

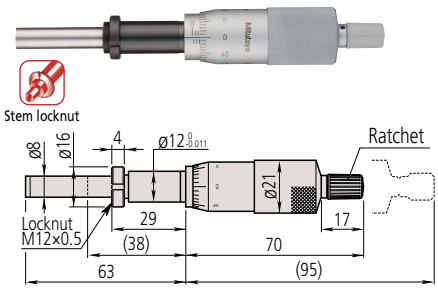

• Fixture thickness: 25.5 mm
151-223 Mass: 155 g

Equipped with Vernier scale
151-221

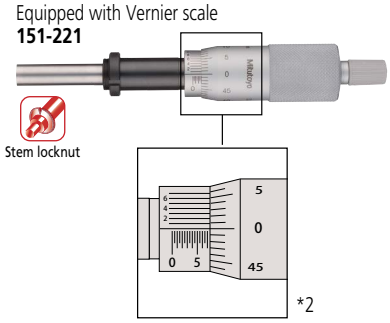

*2 Other dimensions are the same as **151-223**.

Stem Locknut and Spindle Lock

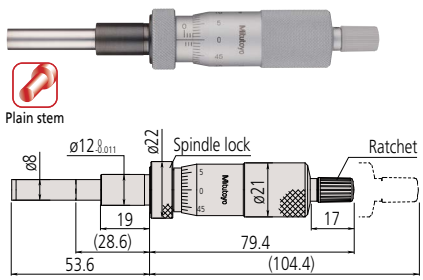

151-214 Mass: 160 g

Equipped with Vernier scale
151-212

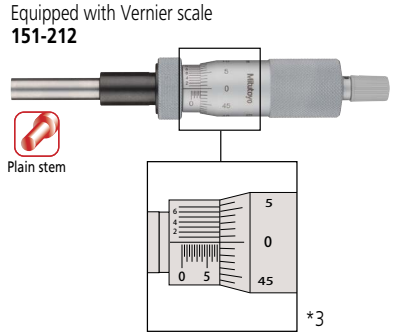

*3 Other dimensions are the same as **151-214**.

Stem Locknut and Spindle Lock

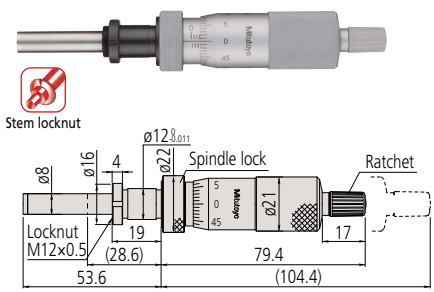

• Fixture thickness: 15.5 mm
151-213 Mass: 165 g

Equipped with Vernier scale
151-211

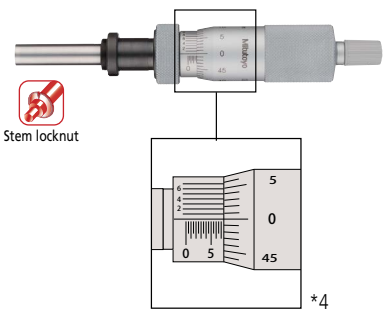

*4 Other dimensions are the same as **151-213**.
( ): with spindle fully retracted.

Need Support?

Micrometer Heads
SERIES 151 — Medium-sized Standard Type with 8 mm Diameter Spindle

DIMENSIONS

Plain Stem

Unit: mm

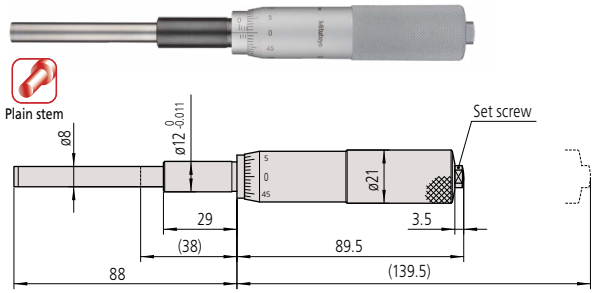

151-260-10 Mass: 240 g

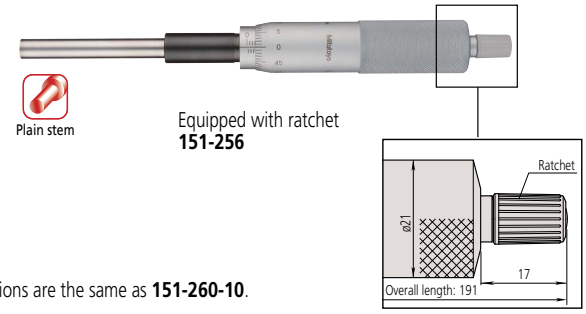

*1 Other dimensions are the same as **151-260-10**.

Stem Locknut

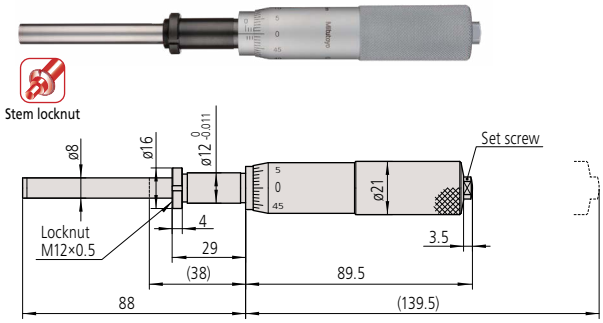

• Fixture thickness: 25.5 mm
151-259-10 Mass: 250 g

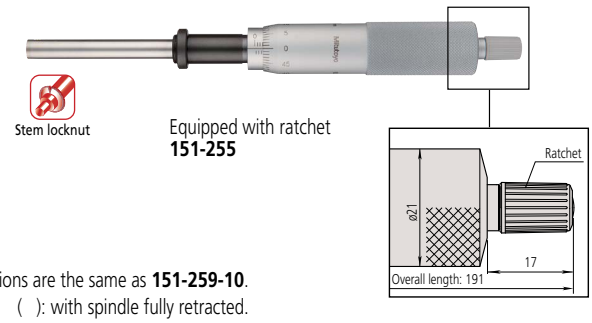

*2 Other dimensions are the same as **151-259-10**.
( ): with spindle fully retracted.

Micrometer Head

Micrometer Heads
SERIES 153 — Non-rotating Spindle Type

- Micrometer head with non-rotating spindle.
- Torsion-free feed reduces workpiece deformation and wear.
- Allows highly accurate positioning.

SPECIFICATIONS

Inch

Order No.	Range (in)	Graduation (in)	Graduation features	Stem dia. (in)	Stem	Spindle end	Spindle pitch (in)	Accuracy (in)
153-108	0 - 0.5	0.001	W/vernier (0.0001 in)	0.375	Plain	Flat (carbide tip)	0.025	±0.00015
153-205*1	0 - 1		Standard	0.5				
153-206*1		0.0001	W/vernier (0.0001 in)					
153-207		0.001	Standard					
153-208		0.0001	W/vernier (0.0001 in)					

Metric

Order No.	Range (mm)	Graduation (mm)	Graduation features	Stem dia. (mm)	Stem	Spindle end	Spindle pitch (mm)	Accuracy (µm)
153-101	0 - 15	0.01	Standard	9.5	Plain	Flat (carbide tip)	0.5	±3
153-201*1	0 - 25			12				
153-202*1		0.001	W/vernier (0.001 mm)					
153-203		0.01	Standard					
153-204		0.001	W/vernier (0.001 mm)					

- Measuring face: Material/Carbide tip, Hardness/90 HRA or more, Lapped
- Satin-chrome plated

*1 With ratchet stop

DIMENSIONS

Unit: mm

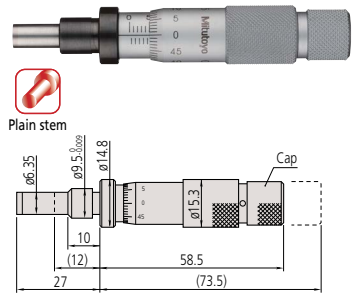

153-101 Mass: 70 g

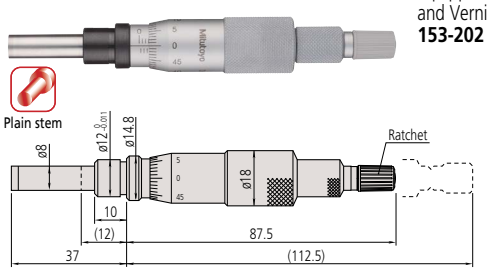

153-201 Mass: 125 g

Equipped with ratchet and Vernier scale
153-202

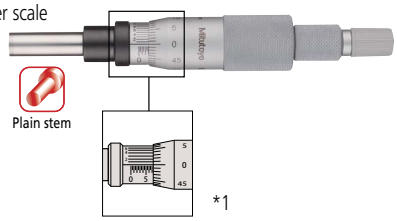

*1 Other dimensions are the same as **153-201**.

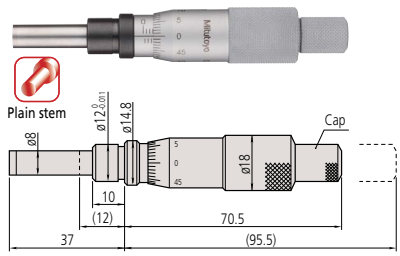

153-203 Mass: 125 g

Without ratchet / Equipped with Vernier scale
153-204

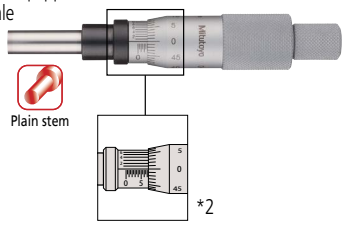

*2 Other dimensions are the same as **153-203**.

( ): with spindle fully retracted.

Need Calibration?

Micrometer Heads
SERIES 152 — Quick Spindle Feed of 1 mm/rev

- This model enables double-speed spindle feeding of 1 mm/rev (compared with 0.5 mm/rev on typical products) to enable quick positioning.
- It also has a good load-bearing capacity.

SPECIFICATIONS

Metric

Order No.	Range (mm)	Graduation (mm)	Stem dia. (mm)	Stem	Spindle end	Spindle pitch (mm)	Accuracy (µm)
152-101	0 - 15	0.01	12	Plain	Flat (carbide tip)	1	±2
152-102	0 - 25						

- Measuring face: Material/Carbide tip, Hardness/90 HRA or more, Lapped
- Satin-chrome plated

DIMENSIONS

Unit: mm

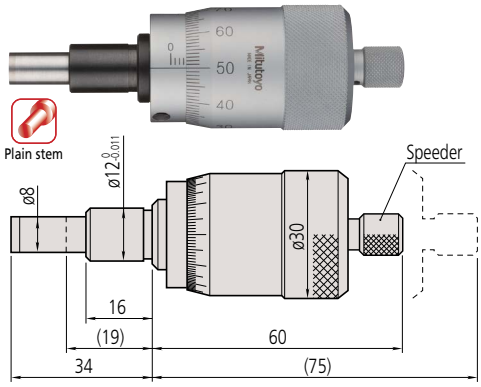

152-101 Mass: 220 g

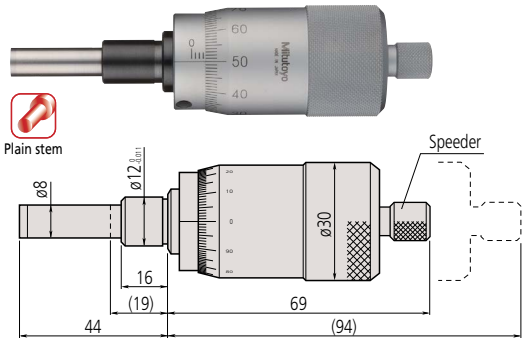

152-102 Mass: 230 g

( ): with spindle fully retracted.

Micrometer Head

Micrometer Heads
SERIES 152 — Large Thimble Type

- Large-diameter thimble for fine adjustment and positioning.

B

SPECIFICATIONS

Metric

Order No.	Range (mm)	Graduation (mm)	Graduation features	Stem dia. (mm)	Stem	Spindle end	Spindle pitch (mm)	Accuracy (µm)
152-283	0 - 10	0.002	Standard	12	W/clamp nut	Flat (carbide tip)	0.5	±2
152-332	0 - 25				Plain			
152-380	0 - 50		Bidirectional					±4

- Measuring face: Material/Carbide tip, Hardness/90 HRA or more, Lapped
- Scale finishing: White anodized aluminum

DIMENSIONS

Unit: mm

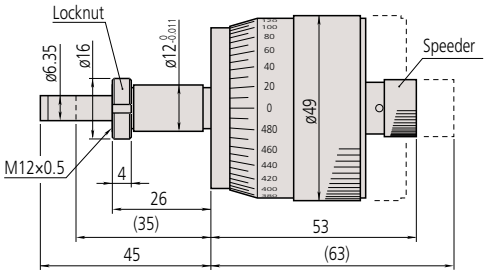

- Fixture thickness: 22.5 mm

152-283 Mass: 190 g

( ): with spindle fully retracted.

Find a Distributor

DIMENSIONS

Unit: mm

Plain stem

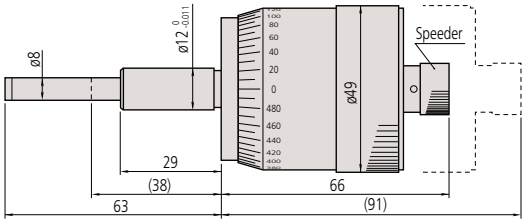

152-332 Mass: 310 g

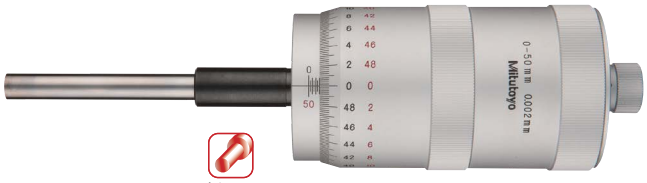

Plain stem

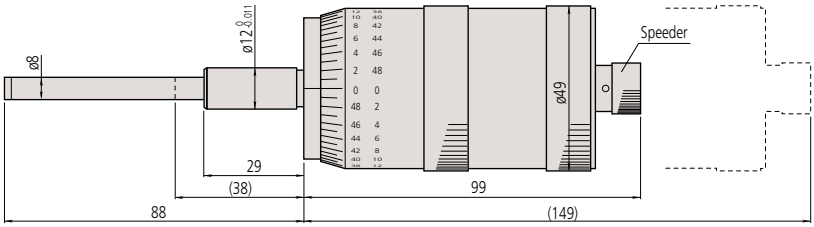

152-380 Mass: 460 g

( ): with spindle fully retracted.

Micrometer Head

Micrometer Heads
SERIES 152 — XY-Stage Type

- Designed for cross-travel stage translation in the X and Y axes. Bidirectional graduation for easy reading in both directions.

B

SPECIFICATIONS

Metric

Order No.	Range (mm)	Graduation (mm)	Graduation features	Stem dia. (mm)	Stem	Spindle pitch (mm)	Accuracy (µm)
152-390	0 - 25	0.005	for X-axis, bidirectional	18	Plain	1	±2
152-389			for Y-axis, bidirectional				

- Measuring face: Material/Carbide tip (**152-389**/**390** are alloy tool steel), Hardness/90 HRA or more (**152-389**/**390** are 60 HRC or more), Lapped
- Scale finishing: White anodized aluminum

DIMENSIONS

Unit: mm

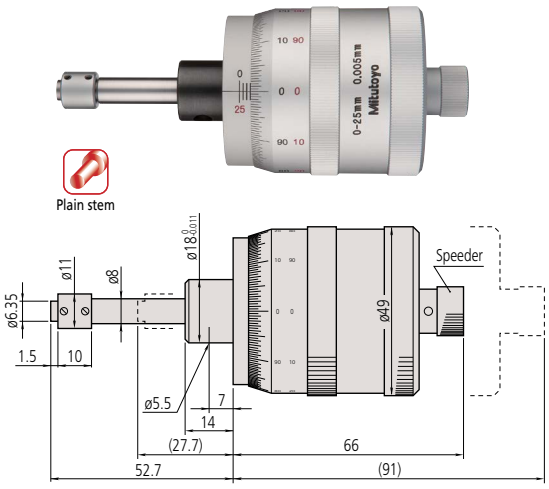

152-390 Mass: 270 g

- The thimble can be rotated to a better reading position while maintaining the spindle position.

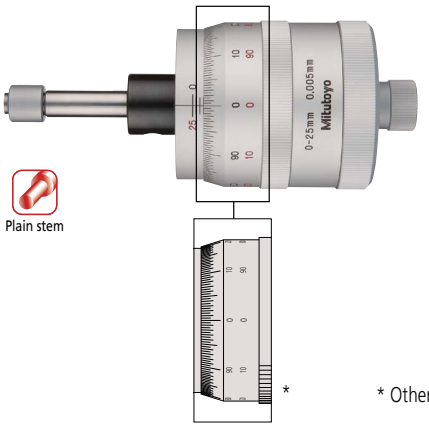

152-389

* Other dimensions are the same as **152-390**.

( ): with spindle fully retracted.

Got Questions?

Micrometer Heads
SERIES 197 — Long Stroke Non-rotating Spindle

- Large-thimble micrometer head with non-rotating spindle. Dual-spindle mechanism for quick feeding and bidirectional graduation for easy reading.
- Floating thimble allows easy zero setting at any spindle position.

197-101

DIMENSIONS

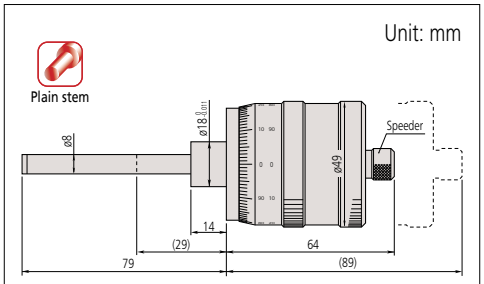

197-101 Mass: 300 g

( ): with spindle fully retracted.

SPECIFICATIONS

Inch

Order No.	Range	Graduation	Graduation features	Stem dia.	Stem	Spindle end	Spindle pitch	Accuracy
197-201	0 - 2 in	0.0002 in	Bidirectional	0.709 in	Plain	Flat (carbide tip)	0.05 in	±0.0001 in

Metric

Order No.	Range	Graduation	Graduation features	Stem dia.	Stem	Spindle end	Spindle pitch	Accuracy
197-101	0 - 50 mm	0.005 mm	Bidirectional	18 mm	Plain	Flat (carbide tip)	1 mm	±5 µm

- Measuring face: Material/Carbide tip, Hardness/90 HRA or more, Lapped
- Scale finishing: White anodized aluminum

Micrometer Heads
SERIES 153 — High Accuracy and Resolution

- Fine graduation and high accuracy model, suitable for inspection equipment.
- Non-rotating spindle type.

153-301

DIMENSIONS

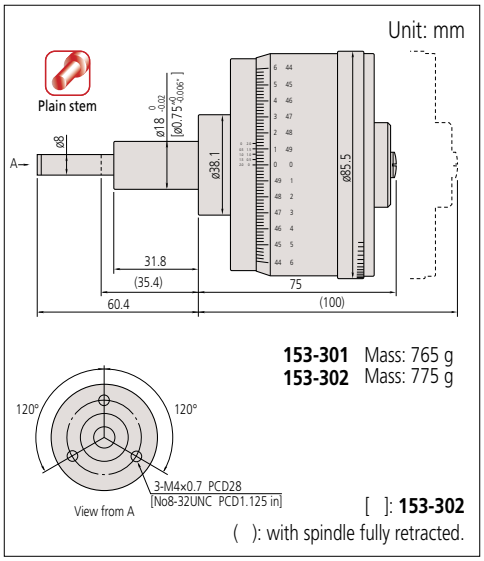

153-301 Mass: 765 g
153-302 Mass: 775 g

[ ]: **153-302**

( ): with spindle fully retracted.

SPECIFICATIONS

Inch

Order No.	Range	Graduation	Graduation features	Stem dia.	Stem	Spindle end	Spindle pitch	Accuracy*
153-302	0 - 1 in	10 µinch (Vernier)	Bidirectional	0.75 in	Plain	Flat (carbide tip)	0.025 in	±0.00005 in/ ±0.00003 in

Metric

Order No.	Range	Graduation	Graduation features	Stem dia.	Stem	Spindle end	Spindle pitch	Accuracy*
153-301	0 - 25 mm	0.0005 mm (Vernier)	Bidirectional	18 mm	Plain	Flat (carbide tip)	0.5 mm	±1/±0.5 µm

- Measuring face: Material/Carbide tip, Hardness/90 HRA or more, Lapped
- Scale finishing: White anodized aluminum

* Wide range/narrow range

Micrometer Head

Micrometer Heads
SERIES 250 — Digit Counter Type

- Digit counter for easy reading of spindle movement.

250-301

B

SPECIFICATIONS

Inch

Order No.	Range (in)	Graduation (in)	Stem dia. (in)	Stem	Spindle end	Spindle pitch (in)	Graduation features	Accuracy (in)
250-312	0 - 1	0.0001	0.375	Plain	Flat (carbide tip)	0.025	Vernier scale	±.0001

Metric

Order No.	Range (mm)	Graduation (mm)	Stem dia. (mm)	Stem	Spindle end	Spindle pitch (mm)	Graduation features	Accuracy (µm)
250-301	0 - 25	0.01	10	Plain	Flat (carbide tip)	0.5	—	±2

- Measuring face: Material/Carbide tip, Hardness/90 HRA or more, Lapped
- Satin-chrome plated

DIMENSIONS

Unit: mm

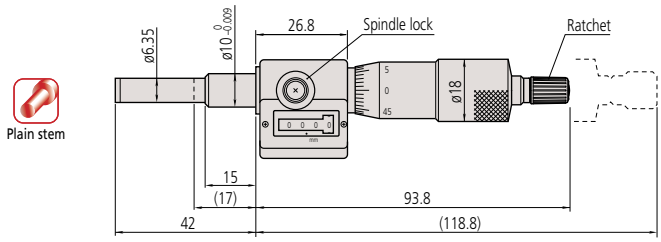

250-301 Mass: 165 g

( ): with spindle fully retracted.

Micro Jack
SERIES 7

- Used for accurate leveling of machines, surface plates, and other precision instruments.
- Zero-setting is possible at any position.
- Easy adjustment under heavy load.

7850

SPECIFICATIONS

Metric

Order No.	Range (mm)	Graduation (mm)	Remarks (kg)	Handle power at the max. loading (N)
7850	60 - 75	0.01	Max. load: 400	90

- Measuring face: Material/Alloy tool steel, Hardness/60 HRC or more, Lapped
- Satin-chrome plated

DIMENSIONS

Unit: mm

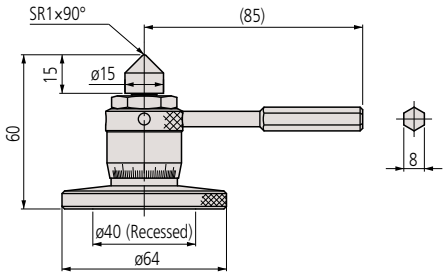

Measurement example

Talk to Sales

Micrometer Head Mounting Fixtures

- The act of fabricating brackets to mount micrometer heads for each particular application can be laborious and costly. Mitutoyo offers various types of fixtures for micrometer heads to meet a range of applications. These fixtures are made of nickel-plated cast iron.

SPECIFICATIONS

Mounting hole size

Micrometer Head	Fixtures (**Code No.**)	Mounting hole size
148 Series	**303560, 303562, 303564, 303566** **303559, 303561, 303563, 303565**	ø9.5×9.5 long for plain stem or stem locknut type micrometer heads
149 Series	**303569, 303571, 303573, 303575** **303568, 303570, 303572, 303574**	ø9.5×15 long for plain stem or stem locknut type micrometer heads
150 Series	**303579, 303581, 303583, 303585** **303578, 303580, 303582, 303584**	ø10×15 long for plain stem or stem locknut type micrometer heads

Note: Supplied with a socket head screw (M3×0.5×12) for fixtures to be used with a micrometer head without stem locknut (plain stem type micrometer head).

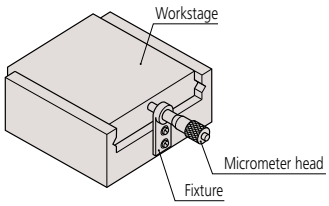

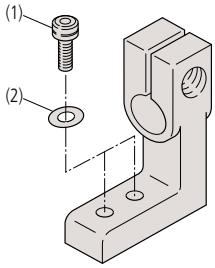

SPECIFICATIONS

Recommended socket head screws for the fixtures

Fixtures (**Order No.**)	Socket head screw (1)	Washer (2)
303559, 303560, 303561, 303562, 303563, 303564 **303565, 303566**	M3×0.5×8 M3×0.5×12	Small, Nominal dia.: 3 Small, Nominal dia.: 3
303568, 303569, 303570, 303571, 303572, 303573 **303578, 303579, 303580, 303581, 303582, 303583**	M4×0.7×10	Small, Nominal dia.: 4
303574, 303575 **303584, 303585**	M4×0.7×12	Small, Nominal dia.: 4

Micrometer Head

Micrometer Heads Mounting Fixtures

Fixtures for micrometer heads with stem locknut

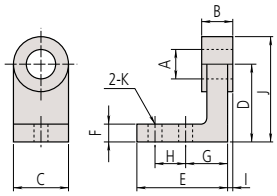

(Unit: mm)

Order No.	A	B	C	D	E	F	G	H	I	J	K
303559	ø9.5	6	15	20	24	5	11	8	0.5	27.5	ø3.4
303568	ø9.5	11.5	20	30	35	7	16	12	1.75	40	ø4.5
303578	ø10	11.5	20	30	35	7	16	12	1.75	40	ø4.5

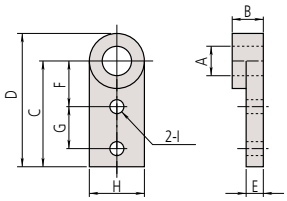

(Unit: mm)

Order No.	A	B	C	D	E	F	G	H	I
303563	ø9.5	6	30	37.5	4.5	15	10	15	ø3.4
303572	ø9.5	11.5	40	50	6.5	18	15	20	ø4.5
303582	ø10	11.5	40	50	6.5	18	15	20	ø4.5

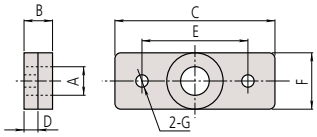

(Unit: mm)

Order No.	A	B	C	D	E	F	G
303561	ø9.5	6	40	3.5	30	15	ø3.4
303570	ø9.5	11.5	60	5.5	40	20	ø4.5
303580	ø10	11.5	60	5.5	40	20	ø4.5

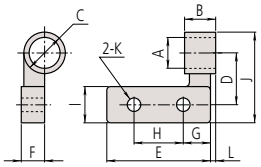

(Unit: mm)

Order No.	A	B	C	D	E	F	G	H	I	J	K	L
303565	ø9.5	6	ø15	15	25	8.5	7.5	10	10	27.5	ø3.4	0.75
303574	ø9.5	11.5	ø15	20	40	8.5	10	20	15	35	ø4.5	1.25
303584	ø10	11.5	ø15	20	40	8.5	10	20	15	35	ø4.5	1.25

Fixtures for plain stem type micrometer heads

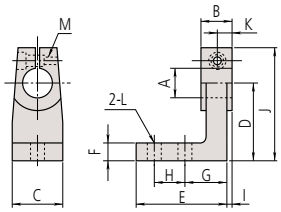

(Unit: mm)

Order No.	A	B	C	D	E	F	G	H	I	J	K	L	M
303560	ø9.5	9	15	20	23	5	11	8	1.5	3.25	4.5	ø3.4	M3x 0.5
303569	ø9.5	14.5	20	30	35	7	16	12	3.25	4.25	7.25	ø4.5	M3x 0.5
303579	ø10	14.5	20	30	35	7	16	12	3.25	4.25	7.25	ø4.5	M3x 0.5

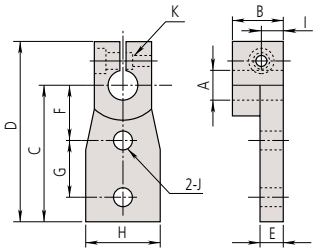

(Unit: mm)

Order No.	A	B	C	D	E	F	G	H	I	J	K
303564	ø9.5	9	30	42.5	4	15	10	15	4.5	ø3.4	M3x 0.5
303573	ø9.5	14.5	40	52.5	6	18	15	20	7.25	ø4.5	M3x 0.5
303583	ø10	14.5	40	52.5	6	18	15	20	7.25	ø4.5	M3x 0.5

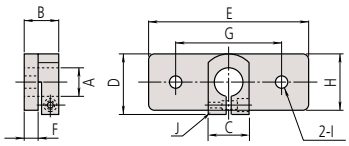

(Unit: mm)

Order No.	A	B	C	D	E	F	G	H	I	J
303562	ø9.5	9	15	20	40	3	30	15	ø3.4	M3x 0.5
303571	ø9.5	14.5	15	22.5	60	5	40	20	ø4.5	M3x 0.5
303581	ø10	14.5	15	22.5	60	5	40	20	ø4.5	M3x 0.5

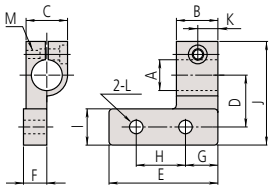

(Unit: mm)

Order No.	A	B	C	D	E	F	G	H	I	J	K	L	M
303566	ø9.5	9	15	15	25	8.5	7.5	10	10	32.5	4.5	ø3.4	M3x 0.5
303575	ø9.5	14.5	15	20	40	8.5	10	20	15	40	7.25	ø4.5	M3x 0.5
303585	ø10	14.5	15	20	40	8.5	10	20	15	40	7.25	ø4.5	M3x 0.5

Where to Buy

Micrometer Head

Main applications:
- Precision feed stages
- Fine adjustment of optical elements (mirrors, prisms)
- Fiber optic centering devices
- Various assembly and adjustment jigs

Precision Lead Screws

- Mitutoyo manufactures simple and economical precision lead screws for precise positioning mechanisms and fine-feed mechanisms, in addition to the conventional micrometer heads.
- Mitutoyo also manufactures lead screws with special specifications, such as 0.25 mm pitch as well as those with the standard 0.5 mm feed pitch and with dimensions and forms that meet customer's requirements.

Micrometer Head

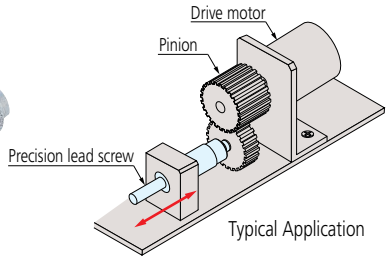

Typical Application

SPECIFICATIONS

Order No.	Model*	Range (mm)	Feed pitch (mm)	Feed accuracy (µm)	Stem diameter (mm)	Tip diameter (mm)	Tail diameter (mm)	Screw nominal diameter	Sleeve diameter (mm)	Measuring face	Mass (g)
04AZA160	AS-6.5	0 - 6.5	0.5	±5	ø6$^{0}_{-0.008}$	ø3.5	ø3$^{0}_{-0.01}$	M4.5×0.5	ø7	Hardened	10
04AZA161	BS-6.5										11
04AZA162	AS-13	0 - 13		±2	ø9.5$^{0}_{-0.009}$	ø5	ø5$^{0}_{-0.012}$	M7.35×0.5	ø10.5		27
04AZA163	BS-13										30
04AZA164	AS-25	0 - 25			ø10$^{0}_{-0.009}$	ø6.35	ø6$^{0}_{-0.015}$		ø12	Carbide tip	61
04AZA165	BS-25										64

- Measuring face: Material/Alloy tool steel (**AS-25** and **BS-25** are Carbide tip), Hardness/60 HRC or more (**AS-25** and **BS-25** are 90 HRA or more), Lapped
- Durability: 100,000 operations are guaranteed (use condition: 4 kg load; 2 kg for **AS-6.5** and **BS-6.5**)

* AS type: Flat spindle tip without nut, BS type: Spherical spindle tip with nut

DIMENSIONS

Type AS: Plain Stem

Unit: mm

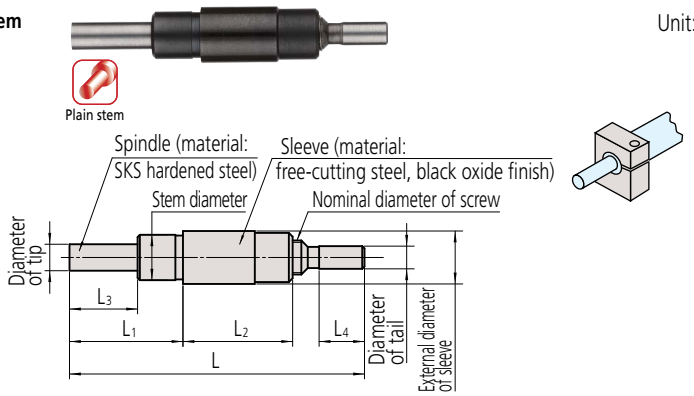

Type BS: Stem with Locknut

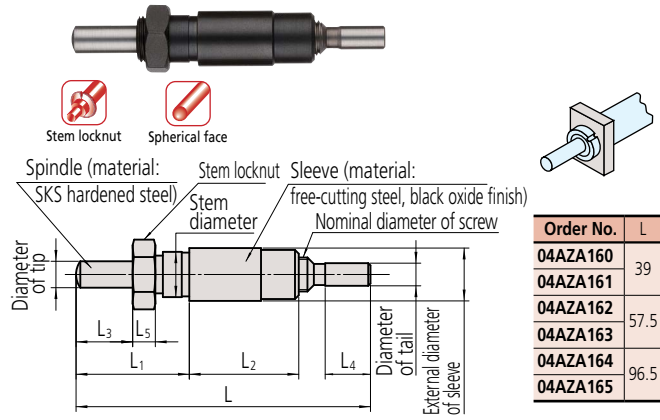

Order No.	L	L1	L2	L3	L4	L5
04AZA160	39	15	14.5	9	6	—
04AZA161				7.5		3
04AZA162	57.5	25	21.5	15.5	8	—
04AZA163						4
04AZA164	96.5	42	39.5	27	10	—
04AZA165						4

Mitutoyo

Featured Products

Digimatic Holtest
3 Contact Bore Gage
Refer to page C-3 for details.

Holtest
3 Contact Bore Gage
Refer to page C-7 for details.

ABSOLUTE Borematic
3 Contact Bore Gage
Refer to page C-13 for details.

Tubular Inside Micrometers
Refer to page C-17 for details.

Inside Micrometers (Caliper type)
Refer to page C-26 for details.

Bore Gages

2 Contact Bore Gage

Refer to page C-31 for details.

MeasurLink® ENABLED
Data Management Software by Mitutoyo

Measurement Data Network System

MeasurLink® is a measurement data management system based on databases (SQL Server). You can build a network to manage the measurement results and measuring instruments simply by combining the required functions.

MeasurLink® is a registered trademark of Mitutoyo Corporation in Japan and Mitutoyo America Corporation in the United States.

IP65 IP53

IP Codes

The code indicates the degree of protection against the ingress of foreign materials and water as defined in the IEC standard (IEC 60529). The number indicates the protection level.
(Refer to page 3)

TÜVRheinland CERTIFIED
Dust- and Water-Protected
www.tuv.com
ID 0000040191

TÜV Rheinland Certification Marks

All products with the marks have passed the IP test carried out by the German accreditation organization, TÜV Rheinland.

Mitutoyo guarantees the product quality
PROPRIETARY INSPECTION CERTIFICATE

Measuring Instruments Shipped with Inspection Certificate

Mitutoyo guarantees product quality as a leading precision measuring instrument manufacturer and ships measuring instruments with an inspection certificate that includes inspection data so that customers can use them with confidence.

ABSOLUTE™

ABSOLUTE Linear Encoder

Mitutoyo developed the unique ABSOLUTE method to retain position information after the power is turned off.
The origin is set once - thereafter the live position is displayed when the power is turned on.

INDEX

Holtest

Digimatic Holtest	C-3,4,5,6
Holtest	C-7,8,9,10
Holtest (Type II)	C-11,12

Borematic

ABSOLUTE Borematic	C-13,14,15,16

Inside Micrometers

Tubular Inside Micrometers (Single-Rod Type)	C-17,18
Tubular Inside Micrometers (Extension-Rod Type)	C-19,20,21
Tubular Inside Micrometers (Extension-Pipe Type)	C-22,23,24,25
Inside Micrometers (Caliper Type)	C-26,27,28
Inside Micrometers (Interchangeable-Rod Type)	C-29
Inside Micro Checker	C-30

Bore Gages

Bore Gages (Extra Small Holes)	C-31,32,33
Bore Gage Stand	C-34
Bore Gages (Small Holes)	C-35,36
Bore Gages	C-37,38,39,40
Bore Gages (Short Leg Type)	C-41,42,43
Bore Gages (Micrometer Head)	C-44,45,46
Bore Gages (Blind Holes)	C-47,48
ABSOLUTE Digimatic Bore Gages	C-49,50
Extension Rod	C-51
Recommended Indicators	C-52
Setting Rings	C-53,54,55,56
Bore Gage Checker	C-57,58

Holtest

Digimatic Holtest
SERIES 468 — Three-point Bore Micrometers

- These three-point bore Digimatic micrometers for inside measurement are suitable for highly accurate measurements.
- Can measure deep holes using an extension rod (optional).
- Can measure close to the bottom of a blind hole.
- Titanium-coated measuring pins provide excellent durability and impact resistance.
- Two values can be preset as a reference point, allowing you to store multiple measured values of setting rings and to quickly prepare for measurement.

468-261

468-268

468-274

C

SPECIFICATIONS

Inch / Metric

Order No.	Range (in)	Resolution	Accuracy (in)	Extension Rod (optional)
468-261	0.275 - 0.35	0.00005 in/ 0.001 mm	±0.0001	**952322** (100 mm)
468-262	0.35 - 0.425			
468-263	0.425 - 0.5			
468-264	0.5 - 0.65		±0.00015	**952621** (150 mm)
468-265	0.65 - 0.8			
468-266	0.8 - 1			**952622** (150 mm)
468-267	1 - 1.2			
468-268	1.2 - 1.6			
468-269	1.6 - 2			**952623** (150 mm)
468-270	2 - 2.5			
468-271	2.5 - 3		±0.0002	
468-272	3 - 3.5			
468-273	3.5 - 4			
468-274	4 - 5	0.0001 in/ 0.001 mm	±0.00025	
468-275	5 - 6			
468-276	6 - 7			
468-277	7 - 8			
468-278	8 - 9		±0.0003	
468-279	9 - 10			
468-280	10 - 11			
468-281	11 - 12			

Metric

Order No.	Range (mm)	Resolution (mm)	Accuracy (µm)	Extension Rod (optional)
468-161	6 - 8	0.001	±2	**952322** (100 mm)
468-162	8 - 10			
468-163	10 - 12			
468-164	12 - 16		±3	**952621** (150 mm)
468-165	16 - 20			
468-166	20 - 25			**952622** (150 mm)
468-167	25 - 30			
468-168	30 - 40			
468-169	40 - 50			**952623** (150 mm)
468-170	50 - 63			
468-171	62 - 75		±4	
468-172	75 - 88			
468-173	87 - 100			
468-174	100 - 125		±5	
468-175	125 - 150			
468-176	150 - 175			
468-177	175 - 200			
468-178	200 - 225		±6	
468-179	225 - 250			
468-180	250 - 275			
468-181	275 - 300			

- Power source: SR44 battery (1 pc.), **938882** included as standard (for operational checks)
- Battery life: Approx. 1.2 years under normal use

Note: Setting rings are optional.

DIMENSIONS

Unit: mm

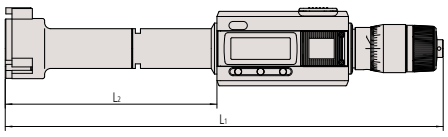

Range	L_2*	L_1
6 - 8, 8 - 10, 10 - 12 mm	59	175 - 177
12 - 16, 16 - 20 mm	84	197 - 201
20 - 25, 25 - 30 mm	93	206 - 211
30 - 40, 40 - 50 mm	103	214 - 224
50 - 63, 62 - 75, 75 - 88, 87 - 100 mm	105	219 - 232
100 - 125, 125 - 150, 150 - 175, 175 - 200, 200 - 225, 225 - 250, 250 - 275, 275 - 300 mm	151	286 - 311

* L_2 is maximum depth of measurement possible.
Note: External view differs depending on measurement range.

MeasurLink ENABLED
Data Management Software by Mitutoyo

IP65

Dust- and Water-Protected
TÜVRheinland CERTIFIED
www.tuv.com ID 0000021605

PROPRIETARY INSPECTION CERTIFICATE

Measurement Example

Reference Dimensions when Measuring a Blind Hole

Range (mm)	L_3 (mm)	L_4 (mm)	L_5 (mm)
6 - 12	2 or below	—	2.5
12 - 20	0.3 or below	5.6	3.5
20 - 30		8.3	5.2
30 - 50		13.0	10.0
50 - 100		17.0	14.0
100 - 300	12.4 or below	21.0	13.8

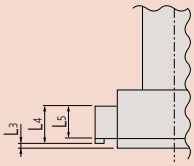

Functions

Zero-setting
Origin restoration
Data hold
2-point preset
Function lock
inch/mm readout (inch/mm type)
Automatic power ON/OFF
Error alarm
Data output

Optional Output Devices

Order No.	Description
Wired	
264-020	USB Input tool (**IT-020U**)
- 05CZA662	Connecting Cable (**1m**)
- 05CZA663	Connecting Cable (**2m**)
06AFM380B	USB Input Tool Direct (**2m**)
Wireless	
264-622	Transmitter (**IP67**)
264-626	Transmitter (**IP67, Bluetooth**)
264-623	Transmitter (**Buzzer**)
264-627	Transmitter (**Buzzer, Bluetooth**)
- 02AZD790B	Connecting Cable
- 02AZE140B	Connecting Cable (**foot switch compatible**)

Note: Model uses connector type "B"

Mounting Bracket (Optional)

Bracket/plate that allows 468 series to be mounted in micrometer stands:
04AZB157

For Special Order Products Contact Mitutoyo America

Optional Output Devices

Order No.	Description
Wired	
264-020	USB Input tool (**IT-020U**)
- 05CZA662	Connecting Cable (**1m**)
- 05CZA663	Connecting Cable (**2m**)
06AFM380B	USB Input Tool Direct (**2m**)
Wireless	
264-622	Transmitter (**IP67**)
264-626	Transmitter (**IP67, Bluetooth**)
264-623	Transmitter (**Buzzer**)
264-627	Transmitter (**Buzzer, Bluetooth**)
- 02AZD790B	Connecting Cable
- 02AZE140B	Connecting Cable (**foot switch compatible**)

Note: Model uses connector type "B"

Interchangeable Head Sets

468-971

468-972

468-973

468-974

Inch / Metric

Set Order No.	Range (in)	Contents of set
468-976	0.275 - 0.5	Display unit 0.275 - 0.5 in 1 pc. Measuring head 0.275 - 0.35 in 1 pc. 0.35 - 0.425 in 1 pc. 0.425 - 0.5 in 1 pc. Setting ring 1 pc. each (0.35 in DIA., 0.425 in DIA.) Extension rod (100 mm) 1 pc. Spanner 2 pcs. Hex wrench 1 pc. Phillips screwdriver 1 pc.
468-977	0.5 - 0.8	Display unit 0.5 - 0.8 in 1 pc. Measuring head 0.5 - 0.65 in 1 pc. 0.65 - 0.8 in 1 pc. Setting ring (0.65 in DIA.) 1 pc. Extension rod (150 mm) 1 pc. Spanner 2 pcs. Hex wrench 1 pc. Phillips screwdriver 1 pc.
468-978	0.8 - 2	Display unit 0.8 - 2 in 1 pc. Measuring head 0.8 - 1 in 1 pc. 1 - 1.2 in 1 pc. 1.2 - 1.6 in 1 pc. 1.6 - 2 in 1 pc. Setting ring 1 pc. each (1 in DIA., 1.6 in DIA.) Extension rod (150 mm) 1 pc. Spanner 2 pcs. Hex wrench 1 pc. Phillips screwdriver 1 pc.
468-979	2 - 4	Display unit 2 - 4 in 1 pc. Measuring head 2 - 2.5 in 1 pc. 2.5 - 3 in 1 pc. 3 - 3.5 in 1 pc. 3.5 - 4 in 1 pc. Setting ring 1 pc. each (2.5 in DIA., 3.5 in DIA.) Extension rod (150 mm) 1 pc. Spanner 2 pcs. Hex wrench 1 pc. Phillips screwdriver 1 pc.

Metric

Set Order No.	Range (mm)	Contents of set
468-971	6 - 12	Display unit 6 - 12 mm 1 pc. Measuring head 6 - 8 mm 1 pc. 8 - 10 mm 1 pc. 10 - 12 mm 1 pc. Setting ring (ø8, ø10) 1 pc. each Extension rod (100 mm) 1 pc. Spanner 2 pcs. Hex wrench 1 pc. Phillips screwdriver 1 pc.
468-972	12 - 20	Display unit 12 - 20 mm 1 pc. Measuring head 12 - 16 mm 1 pc. 16 - 20 mm 1 pc. Setting ring (ø16) 1 pc. Extension rod (150 mm) 1 pc. Spanner 2 pcs. Hex wrench 1 pc. Phillips screwdriver 1 pc.
468-973	20 - 50	Display unit 20 - 50 mm 1 pc. Measuring head 20 - 25 mm 1 pc. 25 - 30 mm 1 pc. 30 - 40 mm 1 pc. 40 - 50 mm 1 pc. Setting ring (ø25, ø40) 1 pc. each Extension rod (150 mm) 1 pc. Spanner 2 pcs. Hex wrench 1 pc. Phillips screwdriver 1 pc.
468-974	50 - 100	Display unit 50 - 100 mm 1 pc. Measuring head 50 - 63 mm 1 pc. 62 - 75 mm 1 pc. 75 - 88 mm 1 pc. 87 - 100 mm 1 pc. Setting ring (ø62, ø87) 1 pc. each Extension rod (150 mm) 1 pc. Spanner 2 pcs. Hex wrench 1 pc. Phillips screwdriver 1 pc.

Find a Distributor

Holtest

Digimatic Holtest
SERIES 468 — Three-point Bore Micrometers

Interchangeable Head Sets

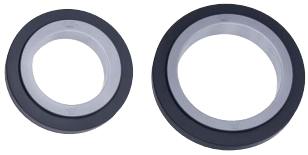

Setting rings are supplied as standard (ø125, ø175) (Packed separately)

468-975

Inch / Metric

Set Order No.	Range (in)	Contents of set
468-980	4 - 8	Display unit 4 - 8 in 1 pc. Measuring head 4 - 5 in 1 pc. 5 - 6 in 1 pc. 6 - 7 in 1 pc. 7 - 8 in 1 pc. Setting ring (5 in DIA., 7 in DIA.) 1 pc. each Extension rod (150 mm) 1 pc. Spanner 2 pcs. Hex wrench 1 pc. Phillips screwdriver 1 pc.

Metric

Set Order No.	Range (mm)	Contents of set
468-975	100 - 200	Display unit 100 - 200 mm 1 pc. Measuring head 100 - 125 mm 1 pc. 125 - 150 mm 1 pc. 150 - 175 mm 1 pc. 175 - 200 mm 1 pc. Setting ring (ø125, ø175) 1 pc. each Extension rod (150 mm) 1 pc. Spanner 2 pcs. Hex wrench 1 pc. Phillips screwdriver 1 pc.

Accessories (Optional)

Refer to page C-4.

Got Questions?

Accessories (Optional)

Refer to page C-4.

Non-Interchangeable Head Sets

468-981

468-982

468-983

468-984

468-985

Inch / Metric

Set Order No.	Range (in)	Contents of set	Extension rod (optional)
468-986	0.275 - 0.5	Display unit 0.275 - 0.35 in 1 pc. 0.35 - 0.425 in 1 pc. 0.425 - 0.5 in 1 pc. Setting ring 1 pc. each (0.35 in DIA., 0.425 in DIA.) Spanner 2 pcs. Hex wrench 1 pc. Phillips screwdriver 1 pc.	100 mm 1 pc.
468-987	0.5 - 1	Display unit 0.5 - 0.65 in 1 pc. 0.65 - 0.8 in 1 pc. 0.8 - 1 in 1 pc. Setting ring 1 pc. each (0.65 in DIA., 0.8 in DIA.) Spanner 2 pcs. Hex wrench 1 pc. Phillips screwdriver 1 pc.	150 mm 2 pcs.*1
468-988	1 - 2	Display unit 1 - 1.2 in 1 pc. 1.2 - 1.6 in 1 pc. 1.6 - 2 in 1 pc. Setting ring 1 pc. each (1.2 in DIA., 1.6 in DIA.) Spanner 1 pc. Hex wrench 1 pc. Phillips screwdriver 1 pc.	150 mm 1 pc.
468-989	2 - 3	Display unit 2 - 2.5 in 1 pc. 2.5 - 3 in 1 pc. Setting ring (2.5 in DIA.) 1 pc. Spanner 1 pc. Hex wrench 1 pc. Phillips screwdriver 1 pc.	150 mm 1 pc.
468-990	3 - 4	Display unit 3 - 3.5 in 1 pc. 3.5 - 4 in 1 pc. Setting ring (3.5 in DIA.) 1 pc. Spanner 1 pc. Hex wrench 1 pc. Phillips screwdriver 1 pc.	150 mm 1 pc.

Metric

Set Order No.	Range (mm)	Contents of set	Extension rod (optional)
468-981	6 - 12	Display unit 6 - 8 mm 1 pc. 8 - 10 mm 1 pc. 10 - 12 mm 1 pc. Setting ring (ø8, ø10) 1 pc. each Spanner 2 pcs. Hex wrench 1 pc. Phillips screwdriver 1 pc.	100 mm 1 pc.
468-982	12 - 25	Display unit 12 - 16 mm 1 pc. 16 - 20 mm 1 pc. 20 - 25 mm 1 pc. Setting ring (ø16, ø20) 1 pc. each Spanner 2 pcs. Hex wrench 1 pc. Phillips screwdriver 1 pc.	150 mm 2 pcs.*1
468-983	25 - 50	Display unit 25 - 30 mm 1 pc. 30 - 40 mm 1 pc. 40 - 50 mm 1 pc. Setting ring (ø30, ø40) 1 pc. each Spanner 1 pc. Hex wrench 1 pc. Phillips screwdriver 1 pc.	150 mm 1 pc.
468-984	50 - 75	Display unit 50 - 63 mm 1 pc. 62 - 75 mm 1 pc. Setting ring (ø62) 1 pc. Spanner 1 pc. Hex wrench 1 pc. Phillips screwdriver 1 pc.	150 mm 1 pc.
468-985	75 - 100	Display unit 75 - 88 mm 1 pc. 87 - 100 mm 1 pc. Setting ring (ø87) 1 pc. Spanner 1 pc. Hex wrench 1 pc. Phillips screwdriver 1 pc.	150 mm 1 pc.

*1 Total 2 pcs. of extension rods: Order No. **952621** (for measuring range 12 to 16 mm, 16 to 20 mm) and Order No. **952622** (for measuring range 20 to 25 mm).
Two extension rods cannot be connected due to the different mounting positions.

Holtest
SERIES 368 — Three-point/Two-point Bore Micrometers

- These are standard analog three-point bore micrometers. (A two-point contact type with measuring range of .080 to .28 in diameter is available to measure extremely small holes.)
- Three-point bore micrometer allows stable measurement through self centering.
- Can measure close to the bottom of a blind hole.
- Titanium-coated measuring pins on the three-point type (over .28 in / 6 mm range models) provide excellent durability and impact resistance.
- Three-point type can measure deep holes by attaching an extension rod (optional).

368-001 (Two-point contact type) **368-168** (Three-point contact type) **368-174** (Three-point contact type)

Measurement Example

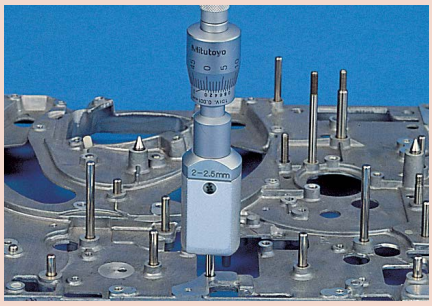

SPECIFICATIONS

Inch

Order No.	Range (in)	Graduation (in)	Accuracy (in)	Extension Rod (optional)
(Two-point)				
368-021	0.08 - 0.1	0.0001	±0.0001	—
368-022	0.1 - 0.12			
368-023	0.12 - 0.16			
368-024	0.16 - 0.2			
368-025	0.2 - 0.24			
368-026	0.24 - 0.28			
(Three-point)				
368-261	0.275 - 0.35			**952322** (100 mm)
368-262	0.35 - 0.425			
368-263	0.425 - 0.5			
368-264	0.5 - 0.65	0.0002	±0.00015	**952621** (150 mm)
368-265	0.65 - 0.8			
368-266	0.8 - 1			**952622** (150 mm)
368-267	1 - 1.2			
368-268	1.2 - 1.6			
368-269	1.6 - 2			
368-270	2 - 2.5			**952623** (150 mm)
368-271	2.5 - 3		±0.0002	
368-272	3 - 3.5			
368-273	3.5 - 4			
368-274	4 - 5		±0.00025	
368-275	5 - 6			
368-276	6 - 7			
368-277	7 - 8			
368-278	8 - 9		±0.0003	
368-279	9 - 10			
368-280	10 - 11			
368-281	11 - 12			

Metric

Order No.	Range (mm)	Graduation (mm)	Accuracy (µm)	Extension Rod (optional)
(Two-point)				
368-001	2 - 2.5	0.001	±2	—
368-002	2.5 - 3			
368-003	3 - 4			
368-004	4 - 5			
368-005	5 - 6			
(Three-point)				
368-161	6 - 8			**952322** (100 mm)
368-162	8 - 10			
368-163	10 - 12			
368-164	12 - 16	0.005	±3	**952621** (150 mm)
368-165	16 - 20			
368-166	20 - 25			**952622** (150 mm)
368-167	25 - 30			
368-168	30 - 40			
368-169	40 - 50			
368-170	50 - 63			**952623** (150 mm)
368-171	62 - 75		±4	
368-172	75 - 88			
368-173	87 - 100			
368-174	100 - 125		±5	
368-175	125 - 150			
368-176	150 - 175			
368-177	175 - 200			
368-178	200 - 225		±6	
368-179	225 - 250			
368-180	250 - 275			
368-181	275 - 300			

Talk to Sales

Reference Dimensions when Measuring a Blind Hole

Range (mm)	L_3 (mm)	L_4 (mm)	L_5 (mm)
2 - 6	—	—	2
6 - 12	2 or below	—	2.5
12 - 20	0.3 or below	5.6	3.5
20 - 30		8.3	5.2
30 - 50		13.0	10.0
50 - 100		17.0	14.0
100 - 300	12.4 or below	21.0	13.8

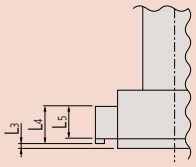

Typical Application of Extension Rod

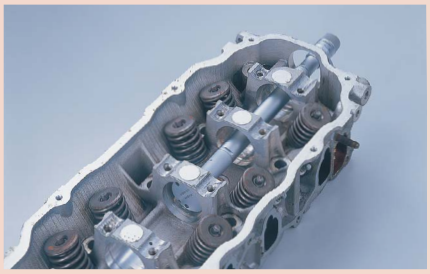

For special-order products, contact Mitutoyo America

DIMENSIONS

Unit: mm

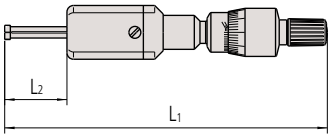

Range	L_2	L_1
2 - 2.5, 2.5 - 3 mm	12	103.5 - 104
3 - 4, 4 - 5, 5 - 6 mm	22	113 - 114

Note: External appearance differs depending on the measuring range.

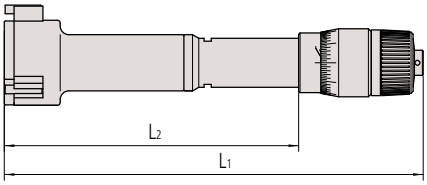

Range	L_2	L_1
6 - 8, 8 - 10, 10 - 12 mm	59	102 - 104
12 - 16, 16 - 20 mm	82	126 - 130
20 - 25, 25 - 30 mm	94	137 - 142
30 - 40, 40 - 50 mm	102	145 - 155
50 - 63, 62 - 75, 75 - 88, 87 - 100 mm	105	150 - 163
100 - 125, 125 - 150, 150 - 175, 175 - 200, 200 - 225, 225 - 250, 250 - 275, 275 - 300 mm	161	227 - 252

Note: External appearance differs depending on the measuring range.

Holtest
SERIES 368 — Three-Point/Two-Point Bore Micrometers

Non-Interchangeable Head Sets

368-906

368-907

368-911

368-912

Inch

Set Order No.	Range (in)	Graduation (in)	Contents of set
(Two-point) **368-926**	0.08 - 0.12	0.0001	Micrometer head unit 0.08 - 0.1 in 1 pc. 0.1 - 0.12 in 1 pc. Setting ring (0.1 in DIA.) 1 pc. Hex wrench 1 pc.
368-927	0.12 - 0.28		Micrometer head unit 0.12 - 0.16 in 1 pc. 0.16 - 0.2 in 1 pc. 0.2 - 0.24 in 1 pc. 0.24 - 0.28 in 1 pc. Setting ring 1 pc. each (0.16 in DIA., 0.24 in DIA.) Hex wrench 1 pc.
(Three-point) **368-916**	0.275 - 0.5		Micrometer head unit 0.275 - 0.35 in 1 pc. 0.35 - 0.425 in 1 pc. 0.425 - 0.5 in 1 pc. Setting ring 1 pc. each (0.35 in DIA., 0.5 in DIA.) Extension rod (100 mm) 1 pc. Spanner 2 pcs. Hex wrench 1 pc.
368-917	0.5 - 0.8	0.0002	Micrometer head unit 0.5 - 0.65 in 1 pc. 0.65 - 0.8 in 1 pc. Setting ring (0.65 in DIA.) 1 pc. Extension rod (150 mm) 1 pc. Spanner 2 pcs. Hex wrench 1 pc.

Metric

Set Order No.	Range (mm)	Graduation (mm)	Contents of set
(Two-point) **368-906**	2 - 3	0.001	Micrometer head unit 2 - 2.5 mm 1 pc. 2.5 - 3 mm 1 pc. Setting ring (ø2.5) 1 pc. Hex wrench 1 pc.
368-907	3 - 6		Micrometer head unit 3 - 4 mm 1 pc. 4 - 5 mm 1 pc. 5 - 6 mm 1 pc. Setting ring (ø4, ø5) 1 pc. each Hex wrench 1 pc.
(Three-point) **368-911**	6 - 12		Micrometer head unit 6 - 8 mm 1 pc. 8 - 10 mm 1 pc. 10 - 12 mm 1 pc. Setting ring (ø8, ø10) 1 pc. each Extension rod (100 mm) 1 pc. Spanner 2 pcs. Hex wrench 1 pc.
368-912	12 - 20	0.005	Micrometer head unit 12 - 16 mm 1 pc. 16 - 20 mm 1 pc. Setting ring (ø16) 1 pc. Extension rod (150 mm) 1 pc. Spanner 2 pcs. Hex wrench 1 pc.

Need Repair?

Non-Interchangeable Head Sets

368-913

368-914

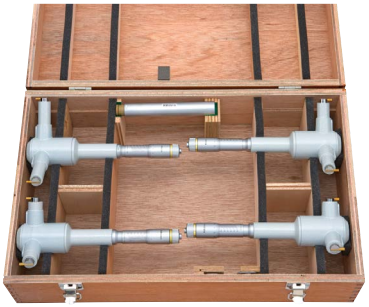

Setting rings are supplied as standard (ø125, ø175) (Packed separately)

368-915

Inch

Set Order No.	Range (in)	Graduation (in)	Contents of set
(Three-point) **368-918**	0.8 - 1	0.0002	Micrometer head unit 0.8 - 1 in 1 pc. 1 - 1.2 in 1 pc. 1.2 - 1.6 in 1 pc. 1.6 - 2 in 1 pc. Setting ring (1 in DIA., 1.6 in DIA.) 1 pc. each Extension rod (150 mm) 1 pc. Spanner 2 pcs. Hex wrench 1 pc.
368-919	2 - 4		Micrometer head unit 2 - 2.5 in 1 pc. 2.5 - 3 in 1 pc. 3 - 3.5 in 1 pc. 3.5 - 4 in 1 pc. Setting ring (2.5 in DIA., 3.5 in DIA.) 1 pc. each Extension rod (150 mm) 1 pc. Spanner 2 pcs. Hex wrench 1 pc.
368-920	4 - 8		Micrometer head unit 4 - 5 in 1 pc. 5 - 6 in 1 pc. 6 - 7 in 1 pc. 7 - 8 in 1 pc. Setting ring (5 in DIA., 7 in DIA.) 1 pc. each Extension rod (150 mm) 1 pc. Spanner 2 pcs. Hex wrench 1 pc.

Metric

Set Order No.	Range (mm)	Graduation (mm)	Contents of set
(Three-point) **368-913**	20 - 50	0.005	Micrometer head unit 20 - 25 mm 1 pc. 25 - 30 mm 1 pc. 30 - 40 mm 1 pc. 40 - 50 mm 1 pc. Setting ring (ø25, ø40) 1 pc. each Extension rod (150 mm) 1 pc. Spanner 2 pcs. Hex wrench 1 pc.
368-914	50 - 100		Micrometer head unit 50 - 63 mm 1 pc. 62 - 75 mm 1 pc. 75 - 88 mm 1 pc. 87 - 100 mm 1 pc. Setting ring (ø62, ø87) 1 pc. each Extension rod (150 mm) 1 pc. Spanner 2 pcs. Hex wrench 1 pc.
368-915	100 - 200		Micrometer head unit 100 - 125 mm 1 pc. 125 - 150 mm 1 pc. 150 - 175 mm 1 pc. 175 - 200 mm 1 pc. Setting ring (ø125, ø175) 1 pc. each Extension rod (150 mm) 1 pc. Spanner 2 pcs. Hex wrench 1 pc.

Holtest

Holtest (Type II)
SERIES 368 — Three-Point Bore Micrometers

- The Holtests (type II) have three contact points made of alloy steel for a more economically priced tool.
- Same accuracy as the titanium-coated Holtest models.
- Constant-force device allows stable measurement.
- Can measure deep holes using an extension rod (optional).

368-769

368-770

368-774

SPECIFICATIONS

Inch Individual

Order No.	Range (in)	Graduation (in)	Accuracy (in)	Extension Rod (optional)
368-864	0.5 - 0.65	0.0002	±0.00015	**952621** (150 mm)
368-865	0.65 - 0.8			
368-866	0.8 - 1			**952622** (150 mm)
368-867	1 - 1.2			
368-868	1.2 - 1.6			
368-869	1.6 - 2			**952623** (150 mm)
368-870	2 - 2.5			
368-871	2.5 - 3		±0.0002	
368-872	3 - 3.5			
368-873	3.5 - 4			
368-874	4 - 5		±0.00025	
368-875	5 - 6			
368-876	6 - 7			
368-877	7 - 8			
368-878	8 - 9		±0.0003	
368-879	9 - 10			
368-880	10 - 11			
368-881	11 - 12			

Note: Setting rings are optional.

Metric Individual

Order No.	Range (mm)	Graduation (mm)	Accuracy (µm)	Extension Rod (optional)
368-764	12 - 16	0.005	±3	**952621** (150 mm)
368-765	16 - 20			
368-766	20 - 25			**952622** (150 mm)
368-767	25 - 30			
368-768	30 - 40			
368-769	40 - 50			
368-770	50 - 63			**952623** (150 mm)
368-771	62 - 75		±4	
368-772	75 - 88			
368-773	87 - 100			
368-774	100 - 125		±5	
368-775	125 - 150			
368-776	150 - 175			
368-777	175 - 200			
368-778	200 - 225		±6	
368-779	225 - 250			
368-780	250 - 275			
368-781	275 - 300			

DIMENSIONS

Unit: mm

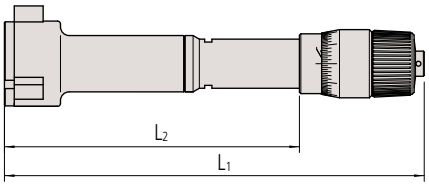

Range	L_2	L_1
12 - 16, 16 - 20 mm	82	126 - 130
20 - 25, 25 - 30 mm	94	137 - 142
30 - 40, 40 - 50 mm	102	145 - 155
50 - 63, 62 - 75, 75 - 88, 87 - 100 mm	105	150 - 163
100 - 125, 125 - 150, 150 - 175, 175 - 200 200 - 225, 225 - 250, 250 - 275, 275 - 300 mm	161	227 - 252

Note: External appearance differs depending on the measuring range.

Measurement Example

Reference Dimensions when Measuring a Blind Hole

Range (mm)	L_3 (mm)	L_5 (mm)
12 - 20	2.6 or below	3.5
20 - 30	3.4 or below	5.2
30 - 50		10.0
50 - 100		14.0
100 - 300	19.6 or below	13.8

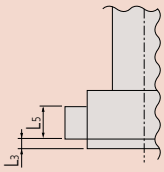

For Special-Order Products, Contact Mitutoyo America

Where to Buy

Non-Interchangeable Head Sets

368-991

368-992

368-993

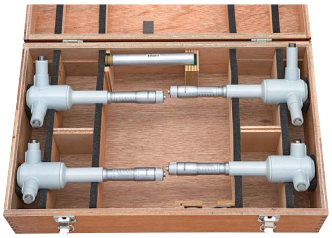

Setting rings are supplied as standard (ø125, ø175) (Packed separately)

368-994

Inch

Order No.	Range (in)	Graduation (in)	Contents of set
368-995	0.5 - 0.8	0.0002	Micrometer head unit 0.5 - 0.65 in 1 pc. 0.65 - 0.8 in 1 pc. Setting ring (0.65 in DIA.) 1 pc. Extension rod (150 mm) 1 pc. Spanner 2 pcs. Hex wrench 1 pc.
368-996	0.8 - 2		Micrometer head unit 0.8 - 1 in 1 pc. 1 - 1.2 in 1 pc. 1.2 - 1.6 in 1 pc. 1.6 - 2 in 1 pc. Setting ring 1 pc. each (1 in DIA., 1.6 in DIA.) Extension rod (150 mm) 1 pc. Spanner 2 pcs. Hex wrench 1 pc.
368-997	2 - 4		Micrometer head unit 2 - 2.5 in 1 pc. 2.5 - 3 in 1 pc. 3 - 3.5 in 1 pc. 3.5 - 4 in 1 pc. Setting ring 1 pc. each (2.5 in DIA., 3.5 in DIA.) Extension rod (150 mm) 1 pc. Spanner 2 pcs. Hex wrench 1 pc.
368-998	4 - 8		Micrometer head unit 4 - 5 in 1 pc. 5 - 6 in 1 pc. 6 - 7 in 1 pc. 7 - 8 in 1 pc. Setting ring 1 pc. each (5 in DIA., 7 in DIA.) Extension rod (150 mm) 1 pc. Spanner 2 pcs. Hex wrench 1 pc.

Metric

Order No.	Range (mm)	Graduation (mm)	Contents of set
368-991	12 - 20	0.005	Micrometer head unit 12 - 16 mm 1 pc. 16 - 20 mm 1 pc. Setting ring (ø16) 1 pc. Extension rod (150 mm) 1 pc. Spanner 2 pcs. Hex wrench 1 pc.
368-992	20 - 50		Micrometer head unit 20 - 25 mm 1 pc. 25 - 30 mm 1 pc. 30 - 40 mm 1 pc. 40 - 50 mm 1 pc. Setting ring (ø25, ø40) 1 pc. each Extension rod (150 mm) 1 pc. Spanner 2 pcs. Hex wrench 1 pc.
368-993	50 - 100		Micrometer head unit 50 - 63 mm 1 pc. 62 - 75 mm 1 pc. 75 - 88 mm 1 pc. 87 - 100 mm 1 pc. Setting ring (ø62, ø87) 1 pc. each Extension rod (150 mm) 1 pc. Spanner 2 pcs. Hex wrench 1 pc.
368-994	100 - 200		Micrometer head unit 100 - 125 mm 1 pc. 125 - 150 mm 1 pc. 150 - 175 mm 1 pc. 175 - 200 mm 1 pc. Setting ring (ø125, ø175)1 pc. each Extension rod (150 mm) 1 pc. Spanner 2 pcs. Hex wrench 1 pc.

Borematic

ABSOLUTE Borematic
SERIES 568 — ABSOLUTE Digimatic Snap-Open Bore Gages

- Activation handle with precision-balanced spring allows for easier inside-diameter measurements.
- Titanium-coated measuring pins provide excellent durability and impact resistance.
- Three-point contact measuring head enables stable measurement.
- Can measure deep holes using an extension rod (optional).

C

568-469-10

568-467-10

Displays can rotate 330°

DIMENSIONS

Unit: mm

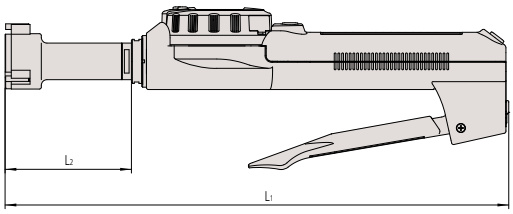

Range	L2	L1
6 - 8, 8 - 10, 10 - 12 mm	83	284
12 - 16, 16 - 20 mm	53	255
20 - 25, 25 - 30 mm	59	261
30 - 40, 40 - 50 mm	67	269
50 - 63, 62 - 75, 75 - 88, 87 - 100, 100 - 113, 112 - 125 mm	75	277

Note: External appearance differs depending on the measuring range.

MeasurLink® ENABLED
Data Management Software by Mitutoyo

PROPRIETARY INSPECTION CERTIFICATE

ABSOLUTE™

Measurement Example

Reference Dimension when Measuring a Blind Hole

Range (mm)	L3 (mm)	L4 (mm)	L5 (mm)
6 - 12	2 or below	—	2.5
12 - 20	0.3 or below	5.6	3.5
20 - 30		8.3	5.2
30 - 50		13.0	10.0
50 - 125		17.0	14.0

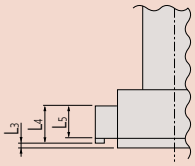

Functions

Go/No-go judgment
Go/No-go judgment zoom
2-Point preset
Zero-setting
Data hold, error alarm
Low battery voltage alert
Data output
Function lock
330° rotary display
ON/OFF function
inch/mm conversion (inch/mm type)

Optional Output Devices

Order No.	Description
Wired	
264-020	USB Input tool (**IT-020U**)
- 905338	Connecting Cable (**1m**)
- 905409	Connecting Cable (**2m**)
06AFM380F	USB Input Tool Direct (**2m**)
Wireless	
264-620	Transmitter (**IP67**)
264-624	Transmitter (**IP67, Bluetooth**)
264-621	Transmitter (**Buzzer**)
264-625	Transmitter (**Buzzer, Bluetooth**)
- 02AZD790F	Connecting Cable
- 02AZE140F	Connecting Cable (**foot switch compatible**)

Note: Model uses connector type "F"

For Special-Order Products, Contact Mitutoyo America

SPECIFICATIONS

Inch / Metric Individual

Order No.	Range (in)	Resolution	Accuracy (in)	Mass (g)	Extension Rod (optional)
568-461-10	0.275 - 0.35	0.00005 in/ 0.001 mm	±0.00025	480	**952322** (100 mm)
568-462-10	0.35 - 0.425			485	
568-463-10	0.425 - 0.5			485	
568-464-10	0.5 - 0.65			475	**952621** (150 mm)
568-465-10	0.65 - 0.8			480	
568-466-10	0.8 - 1		±0.0003	540	**952622** (150 mm)
568-467-10	1 - 1.2			555	
568-468-10	1.2 - 1.6			565	
568-469-10	1.6 - 2			610	
568-470-10	2 - 2.5			730	**952623** (150 mm)
568-471-10	2.5 - 3			740	
568-472-10	3 - 3.5			790	
568-473-10	3.5 - 4			800	
568-474-10	4 - 4.5			900	
568-475-10	4.5 - 5			910	

Metric Individual

Order No.	Range (mm)	Resolution (mm)	Accuracy (µm)	Mass (g)	Extension Rod (optional)
568-361-10	6 - 8	0.001	±5	480	**952322** (100 mm)
568-362-10	8 - 10			485	
568-363-10	10 - 12			485	
568-364-10	12 - 16			475	**952621** (150 mm)
568-365-10	16 - 20			480	
568-366-10	20 - 25		±6	540	**952622** (150 mm)
568-367-10	25 - 30			555	
568-368-10	30 - 40			565	
568-369-10	40 - 50			610	
568-370-10	50 - 63			730	**952623** (150 mm)
568-371-10	62 - 75			740	
568-372-10	75 - 88			790	
568-373-10	87 - 100			800	
568-374-10	100 - 113			900	
568-375-10	112 - 125			910	

- Power source: SR44 battery (1 pc.), **938882** included as standard (for operational checks)
- Battery life: Approx. 5 years under normal use.

Note: Setting rings are optional.

C

Get a Quote

MeasurLink ENABLED
Data Management Software by Mitutoyo

ABSOLUTE Boremetic
SERIES 568 — ABSOLUTE Digimatic Snap-open Bore Gages

Optional Accessories
Refer to page C-13.

Interchangeable-head Bore Gage Sets

568-924-10

568-926-10

Inch / Metric

Order No.	Range (in)	Contents of set
568-928-10	0.275 - 0.5	Display unit 1 pc. Measuring head 0.275 - 0.35 in 1 pc. 0.35 - 0.425 in 1 pc. 0.425 - 0.5 in 1 pc. Attachment 1 pc. Setting ring 1 pc. each (0.35 in DIA., 0.425 in DIA.) Spanner 3 pcs.
568-929-10	0.5 - 1	Display unit 1 pc. Measuring head 0.5 - 0.65 in 1 pc. 0.65 - 0.8 in 1 pc. 0.8 - 1 in 1 pc. Attachment 2 pcs. Setting ring 1 pc. each (0.65 in DIA., 0.8 in DIA.) Spanner 2 pcs.
568-930-10	1 - 2	Display unit 1 pc. Measuring head 1 - 1.2 in 1 pc. 1.2 - 1.6 in 1 pc. 1.6 - 2 in 1 pc. Attachment 1 pc. Setting ring 1 pc. each (1.2 in DIA., 1.6 in DIA.) Spanner 2 pcs.
568-936 -10	2 - 4	Display unit 1 pc. Measuring head 2 - 2.5 in 1 pc. 2.5 - 3 in 1 pc. 3 - 3.5 in 1 pc. 3.5 - 4 in 1 pc. Attachment 1 pc. Setting ring 1 pc. each (2.5 in DIA., 3.5 in DIA.) Spanner 2 pcs.

Metric

Order No.	Range (mm)	Contents of set
568-924-10	6 - 12	Display unit 1 pc. Measuring head 6 - 8 mm 1 pc. 8 - 10 mm 1 pc. 10 - 12 mm 1 pc. Attachment 1 pc. Setting ring (ø8, ø10) 1 pc. each Spanner 3 pcs.
568-925-10	12 - 25	Display unit 1 pc. Measuring head 12 - 16 mm 1 pc. 16 - 20 mm 1 pc. 20 - 25 mm 1 pc. Attachment 2 pcs. Setting ring (ø16, ø20) 1 pc. each Spanner 2 pcs.
568-926-10	25 - 50	Display unit 1 pc. Measuring head 25 - 30 mm 1 pc. 30 - 40 mm 1 pc. 40 - 50 mm 1 pc. Attachment 1 pc. Setting ring (ø30, ø40) 1 pc. each Spanner 2 pcs.
568-927-10	50 - 100	Display unit 1 pc. Measuring head 50 - 63 mm 1 pc. 62 - 75 mm 1 pc. 75 - 88 mm 1 pc. 87 - 100 mm 1 pc. Attachment 1 pc. Setting ring (ø62, ø87) 1 pc. each Spanner 2 pcs.

Need Support?

Boremati c

Non-Interchangeable-Head Snap-Open Bore Gage Sets

Each set includes complete gages (display units and measuring heads for each size).

568-955-10

568-957-10

568-959-10

Inch / Metric

Order No.	Range (in)	Contents of set
568-965-10	0.275 - 0.5	Display unit 0.275 - 0.35 in 1 pc. 0.35 - 0.425 in 1 pc. 0.425 - 0.5 in 1 pc. Setting ring 1 pc. each (0.35 in DIA., 0.425 in DIA.) Spanner 3 pcs.
568-966-10	0.5 - 1	Display unit 0.5 - 0.65 in 1 pc. 0.65 - 0.8 in 1 pc. 0.8 - 1 in 1 pc. Setting ring 1 pc. each (0.65 in DIA., 0.8 in DIA.) Spanner 2 pcs.
568-967-10	1 - 2	Display unit 1 - 1.2 in 1 pc. 1.2 - 1.6 in 1 pc. 1.6 - 2 in 1 pc. Setting ring 1 pc. each (1.2 in DIA., 1.6 in DIA.) Spanner 2 pcs.
568-968-10	2 - 3	Display unit 2 - 2.5 in 1 pc. 2.5 - 3 in 1 pc. Setting ring (2.5 in DIA.) 1 pc. Spanner 2 pcs.
568-969-10	3 - 4	Display unit 3 - 3.5 in 1 pc. 3.5 - 4 in 1 pc. Setting ring (3.5 in DIA.) 1 pc. Spanner 2 pcs.

Metric

Order No.	Range (mm)	Contents of set
568-955-10	6 - 12	Display unit 6 - 8 mm 1 pc. 8 - 10 mm 1 pc. 10 - 12 mm 1 pc. Setting ring (ø8, ø10) 1 pc. each Spanner 3 pcs.
568-956-10	12 - 25	Display unit 12 - 16 mm 1 pc. 16 - 20 mm 1 pc. 20 - 25 mm 1 pc. Setting ring (ø16, ø20) 1 pc. each Spanner 2 pcs.
568-957-10	25 - 50	Display unit 25 - 30 mm 1 pc. 30 - 40 mm 1 pc. 40 - 50 mm 1 pc. Setting ring (ø30, ø40) 1 pc. each Spanner 2 pcs.
568-958-10	50 - 75	Display unit 50 - 63 mm 1 pc. 62 - 75 mm 1 pc. Setting ring (ø62) 1 pc. Spanner 2 pcs.
568-959-10	75 - 100	Display unit 75 - 88 mm 1 pc. 87 - 100 mm 1 pc. Setting ring (ø87) 1 pc. Spanner 2 pcs.

Inside Micrometers

Tubular Inside Micrometers
SERIES 133 — Single-Rod Type

- Standard Single-Rod Type inside micrometer.
- Carbide-tipped measuring faces.
- A reference gage is necessary for reference point setting.
- An optional reference gage, such as Gage Block Accessory Set, CERA inside Micro Checker or a setting ring, is required for accurately setting the micrometer before measuring. (refer to Section E and C accessories for details)

Measurement Example

C

133-223

SPECIFICATIONS

Inch Individual

Order No.	Range (in)	Graduation (in)	Accuracy (in)
133-223	2 - 3	0.001	±0.00015

Metric Individual

Order No.	Range (mm)	Graduation (mm)	Accuracy (µm)
133-143	50 - 75	0.01	±3

DIMENSIONS

133-223/133-143

Unit: mm

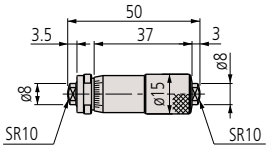

133-224

SPECIFICATIONS

Inch Individual

Order No.	Range (in)	Graduation (in)	Accuracy (in)
133-224	3 - 4	0.001	±0.0002

Metric Individual

Order No.	Range (mm)	Graduation (mm)	Accuracy (µm)
133-144	75 - 100	0.01	±4

DIMENSIONS

133-224/133-144

Unit: mm

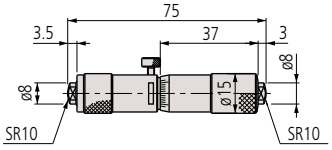

Need Service?

Inside Micrometers

Micrometer Set

133-903 (Inch)
- Range: 2 - 6 in (4 heads/set)
- Models included:
  133-223 133-224
  133-225 133-226
  with fitted case

133-904 (Inch)
- Range: 2 - 12 in (10 heads/set)
- Models included:
  133-223 133-224
  133-225 133-226
  133-227 133-228
  133-229 133-230
  133-231 133-232
  with fitted case

133-901 (Metric)
- Range: 50 - 150 mm (4 heads/set)
- Models included:
  133-143 133-144
  133-145 133-146
  with fitted case

133-902 (Metric)
- Range: 50 - 300 mm (10 heads/set)
- Models included:
  133-143 133-144
  133-145 133-146
  133-147 133-148
  133-149 133-150
  133-151 133-152
  with fitted case

Special sizes and specifications other than standard can be custom made by special order. Please contact your nearest M³ Solution Center for more information.

Example

Measuring face: point
For models with a measuring range 100 - 500 mm

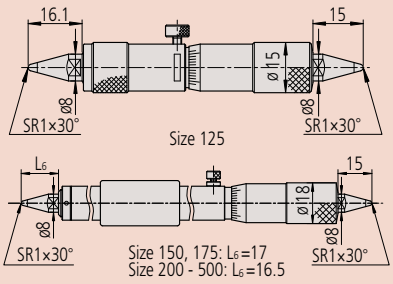

133-227

SPECIFICATIONS

Inch Individual

Order No.	Range (in)	Graduation (in)	Accuracy (in)
133-225	4 - 5	0.001	±0.00025
133-226	5 - 6		
133-227	6 - 7		
133-228	7 - 8		
133-229	8 - 9		
133-230	9 - 10		±0.0003
133-231	10 - 11		
133-232	11 - 12		

Metric Individual

Order No.	Range (mm)	Graduation (mm)	Accuracy (µm)
133-145	100 - 125	0.01	±5
133-146	125 - 150		
133-147	150 - 175		
133-148	175 - 200		
133-149	200 - 225		
133-150	225 - 250		±6
133-151	250 - 275		
133-152	275 - 300		
133-153	300 - 325		±7
133-154	325 - 350		
133-155	350 - 375		
133-156	375 - 400		±8
133-157	400 - 425		
133-158	425 - 450		
133-159	450 - 475		±9
133-160	475 - 500		
133-161	500 - 525		
133-162	525 - 550		±10
133-163	550 - 575		
133-164	575 - 600		
133-165	600 - 625		±11
133-166	625 - 650		
133-167	650 - 675		
133-168	675 - 700		±12
133-169	700 - 725		
133-170	725 - 750		
133-171	750 - 775		±13
133-172	775 - 800		
133-173	800 - 825		
133-174	825 - 850		±14
133-175	850 - 875		
133-176	875 - 900		
133-177	900 - 925		±15
133-178	925 - 950		
133-179	950 - 975		
133-180	975 - 1000		±16

DIMENSIONS

133-145 to 133-180

Unit: mm

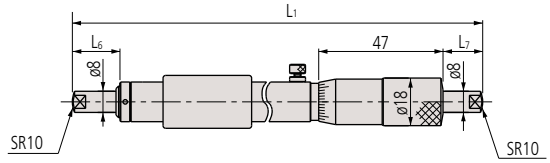

Order No.	L1	L6	L7
133-145	100	5	3
133-146	125	5	3
133-147	150	18	15
133-148	175	18	15
133-149	200	18	15
⋮	⋮	⋮	⋮
133-180	975	18	15

C

Mitutoyo

Inside Micrometers

Tubular Inside Micrometers
SERIES 137, 337 — Extension-Rod Type

- Wide range of inside measurements possible by combining extension rods and anvils with the micrometer head.
- A reference gage is necessary for reference point setting.
- Two types of measuring faces are available: with or without carbide tip. The SERIES **337** is only available with carbide tip.
- An optional reference gage, such as Gage Block Accessory Set, CERA inside Micro Checker or a setting ring (nominal size 12 in or less), is required for accurately setting the micrometer before measuring (refer to Section E and C accessories for details).
- IP65 (water-proof) protection level that enables use in the presence of cutting fluid (for 337 Series).

337-304

SPECIFICATIONS

Inch / Metric

Order No.	Range (in)	Resolution	Micrometer head stroke (in)	Extension rods		Display unit (in)
				Qty	Size (in)	
337-102	8 - 9	0.0001 in/ 0.001 mm	1	—	—	8 - 9
337-303	8 - 40			6	1, 2, 4 (2 pcs.), 8, 12	
337-304	8 - 60			7	1, 2, 4, 8, 12 (3 pcs.)	

Metric

Order No.	Range (mm)	Resolution (mm)	Micrometer head stroke (mm)	Extension rods		Display unit (mm)
				Qty	Size (mm)	
337-101	200 - 225	0.001	25	—	—	200 - 225
337-301	200 - 1000			6	25, 50, 100 (2 pcs.), 200, 300	
337-302	200 - 1500			7	25, 50, 100, 200, 300 (3 pcs.)	

- Power source: SR44 battery (1 pc.), **938882** included as standard (for operational checks)
- Battery life: Approx. 1.2 years under normal use

MeasurLink ENABLED
Data Management Software by Mitutoyo

IP65

Dust- and Water-Protected
TÜVRheinland CERTIFIED
www.tuv.com ID 0000021605

Applicable models:
SERIES **337**

Technical Data

Inch Model
Accuracy: ±{.00015+.00005n+.00005L*/2}"
L=Maximum measuring length (inch)
n=Number of rods
Fraction rounded up

Metric Model
Accuracy: ±(3+n+L/50)µm
L=Maximum measuring length (mm)
Fraction rounded up
n=Number of rods
Excluding quantizing error

Measurement Example

Functions

Zero-setting
Origin restoration
Data hold
2-point preset
Function lock
Automatic power ON/OFF
Error alarm
Data output

Optional Output Devices

Order No.	Description
Wired	
264-020	USB Input tool (**IT-020U**)
- 05CZA662	Connecting Cable (**1m**)
- 05CZA663	Connecting Cable (**2m**)
06AFM380B	USB Input Tool Direct (**2m**)
Wireless	
264-620	Transmitter (**IP67**)
264-624	Transmitter (**IP67, Bluetooth**)
264-621	Transmitter (**Buzzer**)
264-625	Transmitter (**Buzzer, Bluetooth**)
- 02AZD790B	Connecting Cable
- 02AZE140B	Connecting Cable (**foot switch compatible**)

Note: Model uses connector type "B"

Inside Micrometers

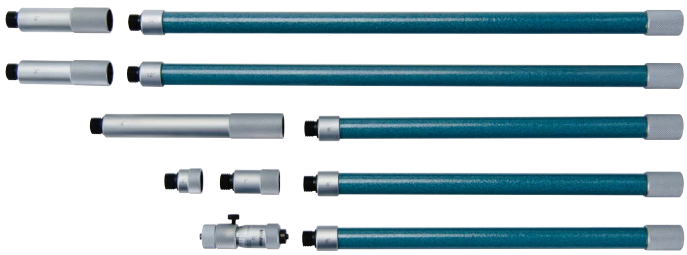

137-215

SPECIFICATIONS

Inch

Order No.	Range (in)	Graduation (in)	Micrometer head stroke (in)	Extension rods Qty	Extension rods Size (in)	Main unit (in)
137-211	2 - 6	0.001	0.5	3	0.5, 1, 2	2 - 2.5
137-212	2 - 12			5	0.5, 1, 2 (2 pcs.), 4	
137-213	2 - 20			6	0.5, 1, 2 (2 pcs.), 4, 8	
137-214	2 - 40			8	0.5, 1, 2 (2 pcs.), 4, 8 (2 pcs.), 12	
137-215	2 - 60			10	0.5, 1, 2 (2 pcs.), 4, 8 (3 pcs.), 12 (2 pcs.)	
With carbide measuring face						
137-216	2 - 6	0.001	0.5	3	0.5, 1, 2	2 - 2.5
137-217	2 - 12			5	0.5, 1, 2 (2 pcs.), 4	
137-218	2 - 20			6	0.5, 1, 2 (2 pcs.), 4, 8	
137-219	2 - 40			8	0.5, 1, 2 (2 pcs.), 4, 8 (2 pcs.), 12	
137-220	2 - 60			10	0.5, 1, 2 (2 pcs.), 4, 8 (3 pcs.), 12 (2 pcs.)	

Metric

Order No.	Range (mm)	Graduation (mm)	Micrometer head stroke (mm)	Extension rods Qty	Extension rods Size (mm)	Main unit (mm)
137-201	50 - 150	0.01	13	3	13, 25, 50	50 - 63
137-202	50 - 300			5	13, 25, 50 (2 pcs.), 100	
137-203	50 - 500			6	13, 25, 50 (2 pcs.), 100, 200	
137-204	50 - 1000			8	13, 25, 50 (2 pcs.), 100, 200 (2 pcs.), 300	
137-205	50 - 1500			10	13, 25, 50 (2 pcs.), 100, 200 (3 pcs.), 300 (2 pcs.)	
With carbide measuring face						
137-206	50 - 150	0.01	13	3	13, 25, 50	50 - 63
137-207	50 - 300			5	13, 25, 50 (2 pcs.), 100	
137-208	50 - 500			6	13, 25, 50 (2 pcs.), 100, 200	
137-209	50 - 1000			8	13, 25, 50 (2 pcs.), 100, 200 (2 pcs.), 300	
137-210	50 - 1500			10	13, 25, 50 (2 pcs.), 100, 200 (3 pcs.), 300 (2 pcs.)	

DIMENSIONS

137-215/137-205

Unit: mm

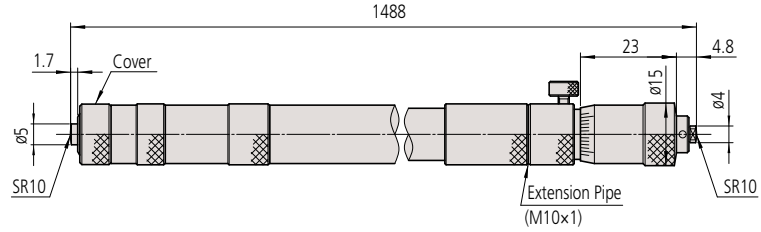

Need Calibration?

Inside Micrometers

Tubular Inside Micrometers
SERIES 137 — Extension-Rod Type (Main Unit)

- Micrometer head for Extension-Rod Type inside micrometer.
- A reference gage is necessary for reference point setting.
- An optional reference gage, such as Gage Block Accessory Set or a setting ring, is required for accurately setting the micrometer before measuring (refer to Section E and C accessories for details).

C

137-012

SPECIFICATIONS

Inch

Order No.	Range (in)	Graduation (in)	Micrometer head stroke (in)
137-012 Carbide-tipped **137-014**	2 - 2.5	0.001	0.5

Metric

Order No.	Range (mm)	Graduation (mm)	Micrometer head stroke (mm)
137-011 Carbide-tipped **137-013**	50 - 63	0.01	13

DIMENSIONS

137-012/137-011

Unit: mm

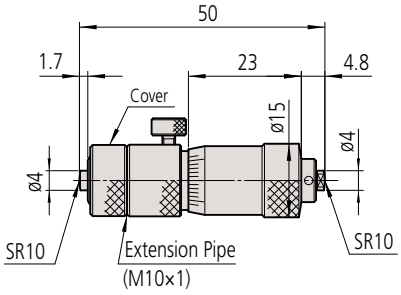

Find a Distributor

MeasurLink® ENABLED
Data Management Software by Mitutoyo

IP65

Dust- and Water-Protected
TÜVRheinland CERTIFIED
www.tuv.com ID 0000021605

Tubular Inside Micrometers
SERIES 339 — Extension-pipe Type

- Wide range of inside measurements possible by combining extension pipes and anvils with the micrometer head.
- A reference gage is necessary for reference point setting.
- Carbide-tipped measuring faces.
- IP65 (water-proof) protection level that enables use in the presence of cutting fluid.

339-303

Technical Data

Inch Model
Accuracy: ±{.00015+.00005n+.00005L*/2}"
L=Maximum measuring length (inch)
n=Number of rods
Fraction rounded up

Metric Model
Accuracy: ±(3+n+L/50)µm
L=Maximum measuring length (mm)
Fraction rounded up
n=Number of rods
Excluding quantizing error

Measurement Example

Functions

Zero-setting
Origin restoration
Data hold
Function lock
Automatic power ON/OFF
2-point preset
Error alarm
Data output

Optional Output Devices

Order No.	Description
Wired	
264-020	USB Input tool (**IT-020U**)
- 05CZA662	Connecting Cable (**1m**)
- 05CZA663	Connecting Cable (**2m**)
06AFM380B	USB Input Tool Direct (**2m**)
Wireless	
264-620	Transmitter (**IP67**)
264-624	Transmitter (**IP67, Bluetooth**)
264-621	Transmitter (**Buzzer**)
264-625	Transmitter (**Buzzer, Bluetooth**)
- 02AZD790B	Connecting Cable
- 02AZE140B	Connecting Cable (**foot switch compatible**)

Note: Model uses connector type "B"

SPECIFICATIONS

Inch / Metric

Order No.	Range (in)	Resolution	Micrometer head stroke (in)	Extension pipes Qty	Extension pipes Size (in)	Display unit (in)
339-102	8 - 9	0.0001 in/ 0.001 mm	1		—	8 - 9
339-303	8 - 40			5	1, 2, 4, 8, 16	
339-304	8 - 80			8	1, 2, 4, 8 (2 pcs.), 16 (3 pcs.)	

Metric

Order No.	Range (mm)	Resolution (mm)	Micrometer head stroke (mm)	Extension pipes Qty	Extension pipes Size (mm)	Display unit (mm)
339-101	200 - 225	0.001	25	—	—	200 - 225
339-301	200 - 1000			5	25, 50, 100, 200, 400	
339-302	200 - 2000			8	25, 50, 100, 200 (2 pcs.), 400 (3 pcs.)	

- Power source: SR44 battery (1 pc.), **938882** included as standard (for operational checks)
- Battery life: Approx. 1.2 years under normal use

Mitutoyo

Inside Micrometers

MeasurLink® ENABLED
Data Management Software by Mitutoyo

C

Tubular Inside Micrometers
SERIES 139, 140 — Extension-pipe Type

- Wide range of inside measurements possible by combining extension pipes and anvils with the micrometer head.
- An optional reference gage is required for accurately setting the micrometer before measuring.
- Carbide-tipped measuring faces.

139-182

SPECIFICATIONS

Inch

Order No.	Range (in)	Graduation (in)	Micrometer head stroke (in)	Extension pipes		Main unit (in)
				Qty	Size (in)	
139-178	4 - 20	0.001	1	4	1, 2, 4, 8	4 - 5
139-179	4 - 36			5	1, 2, 4, 8, 16	
139-180	4 - 52			6	1, 2, 4, 8, 16 (2 pcs.)	

Metric

Order No.	Range (mm)	Graduation (mm)	Micrometer head stroke (mm)	Extension pipes		Main unit (mm)
				Qty	Size (mm)	
139-173	100 - 500	0.01	25	4	25, 50, 100, 200	100 - 125
139-174	100 - 900			5	25, 50, 100, 200, 400	
139-175	100 - 1300			6	25, 50, 100, 200, 400 (2 pcs.)	

DIMENSIONS

139-182/139-177

Unit: mm

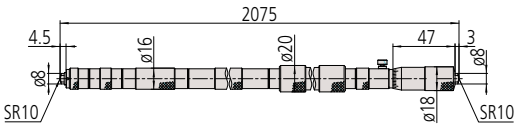

Got Questions?

140-160

SPECIFICATIONS

Inch

Order No.	Range (in)	Graduation (in)	Micrometer head stroke (in)	Extension pipes		Main unit (in)
				Qty	Size (in)	
140-161	40 - 80	0.001	2	5	2, 4 (2 pcs.), 8, 20	40 - 42
140-162	40 - 120			6	2, 4 (2 pcs.), 8, 20, 40	
140-163	40 - 160			7	2, 4 (2 pcs.), 8, 20, 40 (2 pcs.)	
140-164	40 - 200			8	2, 4 (2 pcs.), 8, 20, 40 (3 pcs.)	

Metric

Order No.	Range (mm)	Graduation (mm)	Micrometer head stroke (mm)	Extension pipes		Main unit (mm)
				Qty	Size (mm)	
140-157	1000 - 2000	0.01	50	5	50, 100 (2 pcs.), 200, 500	1000 - 1050
140-158	1000 - 3000			6	50, 100 (2 pcs.), 200, 500, 1000	
140-159	1000 - 4000			7	50, 100 (2 pcs.), 200, 500, 1000 (2 pcs.)	
140-160	1000 - 5000			8	50, 100 (2 pcs.), 200, 500, 1000 (3 pcs.)	

DIMENSIONS

140-162/140-158

Unit: mm

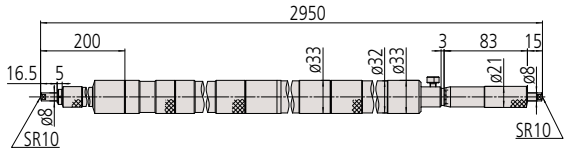

Inside Micrometers

Tubular Inside Micrometers
SERIES 139 — Extension-Pipe Type (Main Unit)

- Micrometer head for Extension-pipe Type inside micrometer.
- A reference gage is necessary for reference point setting.
- An optional reference gage, such as Gage Block Accessory Set, CERA Inside Micro Checker or a setting ring, is required for accurately setting the micrometer before measuring (refer to Section E and C accessories for details).

C

139-002

SPECIFICATIONS

Inch

Order No.	Range (in)	Graduation (in)	Micrometer head stroke (in)
139-002	4 - 5	0.001	1

Metric

Order No.	Range (mm)	Graduation (mm)	Micrometer head stroke (mm)
139-001	100 - 125	0.01	25

DIMENSIONS

139-002/139-001 Unit: mm

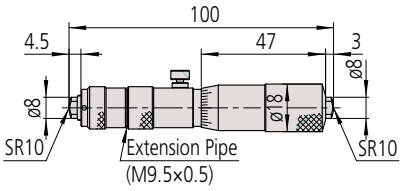

Talk to Sales

Inside Micrometers

Inside Micrometers
SERIES 345 — Caliper Type

- Useful for measuring workpieces with grooves that cannot be measured by a two-point or three-point inside micrometer.
- Carbide-tipped measuring faces.
- Equipped with a constant measuring-force device.
- An optional reference gage, such as Gage Block Accessory Set, CERA Inside Micro Checker or a setting ring, is required for accurately setting the micrometer before measuring (refer to Section E and C accessories for details).

Measurement Example

345-350-32

Optional Output Devices

Order No.	Description
Wired	
264-020	USB Input tool (**IT-020U**)
- 05CZA662	Connecting Cable (**1m**)
- 05CZA663	Connecting Cable (**2m**)
06AFM380B	USB Input Tool Direct (**2m**)
Wireless	
264-622	Transmitter (**IP67**)
264-626	Transmitter (**IP67, Bluetooth**)
264-623	Transmitter (**Buzzer**)
264-627	Transmitter (**Buzzer, Bluetooth**)
- 02AZF310	Connecting Unit (**Adapter**)
- 02AZE140B	Connecting Cable (**foot switch compatible**)

Note: Model uses connector type "B"

SPECIFICATIONS

Inch / Metric

Order No.	Range (in)	Resolution	Accuracy (in)	Jaw	Mass (g)
345-350-32	0.2 - 1.2	0.00005 in/ 0.001 mm	±0.00025	Pin	320
345-351-32	1 - 2		±0.0003	Anvil	325

Metric

Order No.	Range (mm)	Resolution (mm)	Accuracy (µm)	Jaw	Mass (g)
345-250-32	5 - 30	0.001	±5	Pin	320
345-251-32	25 - 50		±6	Anvil	325

- Power source: SR44 battery (1 pc.), **938882** included as standard (for operational checks)
- Battery life: Approx. 2.4 years under normal use

DIMENSIONS

Unit: mm

345-350-32/
345-250-32
(Pin Jaw Type)

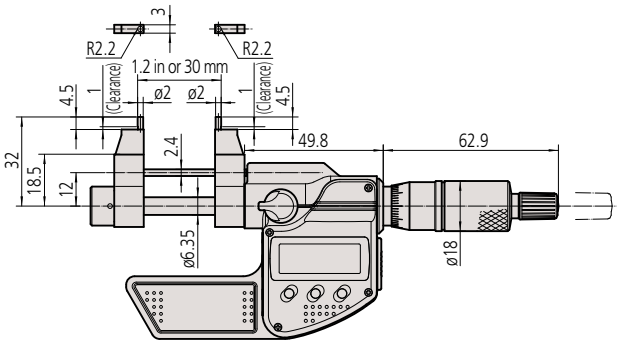

345-351-32/
345-251-32
(Anvil Jaw Type)

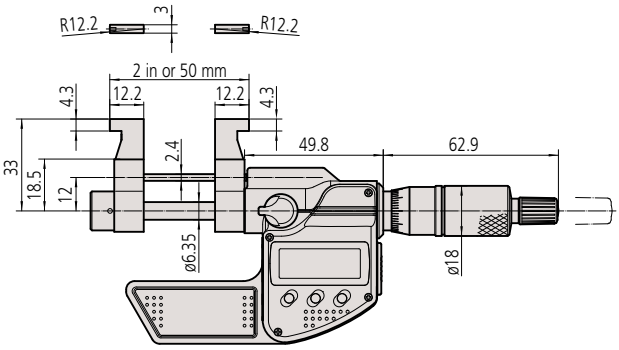

Inside Micrometers

Inside Micrometers
SERIES 145 — Caliper Type

- This is an analog version of the SERIES **345** caliper type micrometer for inside measurement.
- Carbide-tipped measuring faces.
- Equipped with a constant measuring-force device.
- An optional reference gage, such as Gage Block Accessory Set, CERA Inside Micro Checker or a setting ring, is required for accurately setting the micrometer before measuring (refer to Section E and C accessories for details).

C

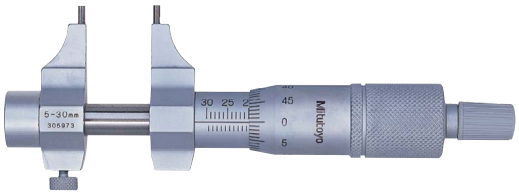

145-185

Optional Accessories

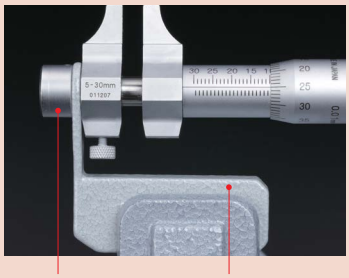

Cap (**300401**) Holder (**300400**)

Note 1: This instrument requires the cap and the holder for mounting on a micrometer stand.

SPECIFICATIONS

Inch

Order No.	Range (in)	Graduation (in)	Accuracy (in)	Jaw	Mass (g)
145-193	0.2 - 1.2	0.001	±0.00025	Pin	130
145-194	1 - 2		±0.0003	Anvil	140

Metric

Order No.	Range (mm)	Graduation (mm)	Accuracy (µm)	Jaw	Mass (g)
145-185	5 - 30	0.01	±5	Pin	130
145-186	25 - 50		±6	Anvil	140

Note: The minimum pitch circle measurement is ø5 mm with pin type (**145-185**, **145-193**).

DIMENSIONS

Unit: mm

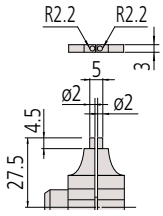

145-193, 145-185
(Pin Jaw Type)

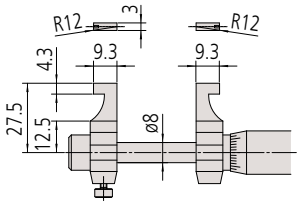

145-194, 145-186
(Anvil Jaw Type)

Need Repair?

Inside Micrometers

145-195

C

SPECIFICATIONS

Inch

Order No.	Range (in)	Graduation (in)	Accuracy (in)	Jaw	Mass (g)
145-195	2 - 3	0.001	±0.00035	Anvil	160
145-196	3 - 4		±0.0004		180

Metric

Order No.	Range (mm)	Graduation (mm)	Accuracy (µm)	Jaw	Mass (g)
145-187	50 - 75	0.01	±7	Anvil	160
145-188	75 - 100		±8		180
145-189	100 - 125		±9		210
145-190	125 - 150				230
145-191	150 - 175		±10		250
145-192	175 - 200				270
145-217	200 - 225		±11		310
145-218	225 - 250				330
145-219	250 - 275		±12		350
145-220	275 - 300				370
145-221	300 - 325		±16		390
145-222	325 - 350				410
145-223	350 - 375				430
145-224	375 - 400				450
145-225	400 - 425		±21		470
145-226	425 - 450				490
145-227	450 - 475				510
145-228	475 - 500				530

DIMENSIONS

Unit: mm

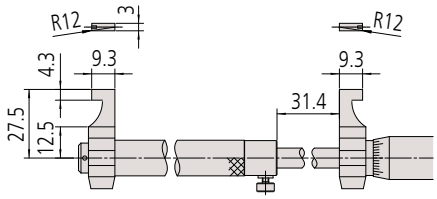

Mitutoyo

Inside Micrometers

Inside Micrometers
SERIES 141 — Interchangeable-Rod Type

- Wide range of inside measurements possible by combining one or more interchangeable rods.
- For models supplied with more than one interchangeable rod, the full measuring range is achieved by combining spacing collars with the rods.

141-102

C

Technical Data

Inch Model
Accuracy: ±{.00024+ (.00004xL/2)}"
L=Maximum measuring length (inch)
Fraction rounded up

Metric Model
Accuracy: ±(6+L/50)µm
L=Maximum measuring length (mm)
Fraction rounded up

SPECIFICATIONS

Inch

Order No.	Range (in)	Graduation (in)	Micrometer head stroke (in)	Remarks
141-102 / 141-104*1	1 - 2	0.001	0.25	with 2 rods
141-208 / 141-214*1	2 - 8		0.5	with 3 rods
141-233 / 141-215*1	2 - 12			with 5 rods
141-121	8 - 20		1	with 3 rods
141-122	8 - 40			with 8 rods

Metric

Order No.	Range (mm)	Graduation (mm)	Micrometer head stroke (mm)	Remarks
141-101 / 141-103*1	25 - 50	0.01	7	with 2 rods
141-205 / 141-211*1	50 - 200		13	with 3 rods
141-206 / 141-212*1	50 - 300			with 5 rods
141-117	200 - 500		25	with 3 rods
141-118	200 - 1000			with 8 rods

*1 With carbide measuring face

Inch Micrometer head only model

Order No.	Range (in)	Graduation (in)	Micrometer head stroke (in)
141-002 / 141-004*1	—	0.001	0.25
141-026 / 141-028*1	—		0.5
141-010 / 141-012*1	8 - 9		1

Metric Micrometer head only model

Order No.	Range (mm)	Graduation (mm)	Micrometer head stroke (mm)
141-001 / 141-003*1	—	0.01	7
141-025 / 141-027*1	—		13
141-009 / 141-011*1	200 - 225		25

*1 With carbide measuring face

DIMENSIONS

141-101

Unit: mm

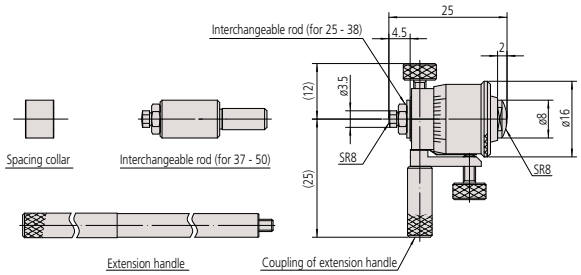

Where to Buy

CERA Inside Micro Checker SERIES 515

- The Inside Micro Checker is designed to act as a setting standard for inside micrometers.
- Recommended for SERIES **133**, **139** and **145** (over 50 mm). Not applicable for SERIES **137**, **141**, **337** and **339**.

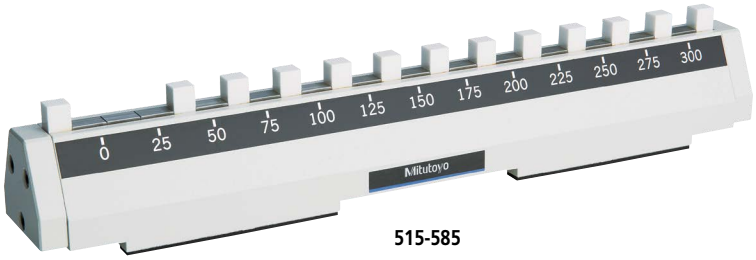

515-585

Measurement Example

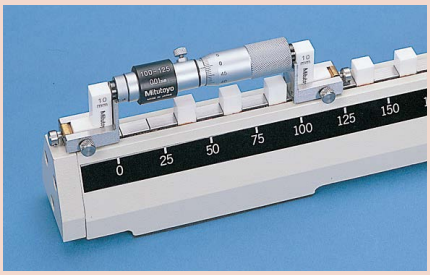

Standard Accessory Set

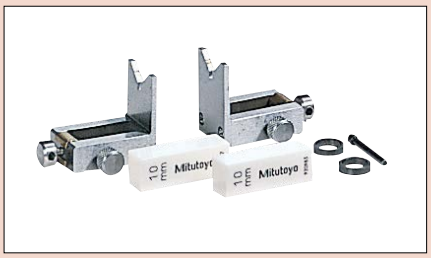

Support clamps	**940286***	Pair
Auxiliary block 10 mm	**611671-02**	2 pcs.
Collar	**602195**	2 pcs.
Clamp screwdriver	**600324**	1 pc.

* Order No. is equivalent to a pair (2 pcs.)

SPECIFICATIONS

Order No.	Length to check (mm)	Block pitch accuracy
515-585	25 - 300	±(1 + L/150) µm L: Length to check (mm)
515-586	25 - 600	

Note: The bottom surface and the contact faces are not precisely perpendicular to each other if Height Masters are needed, refer to the E section.

DIMENSIONS

Unit: mm

515-585

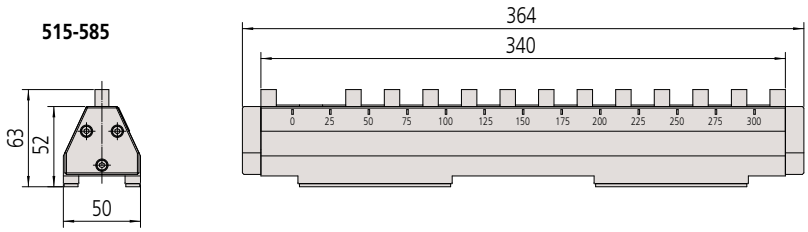

515-586

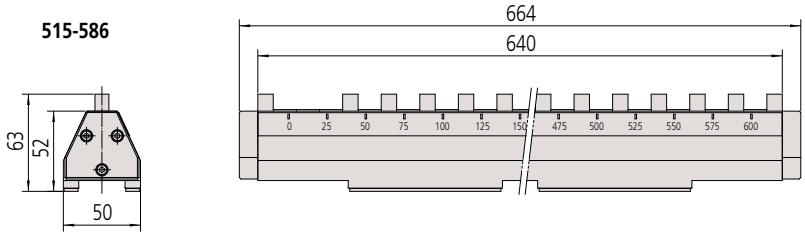

Bore Gages

Bore Gages — Split Ball Type
SERIES 526 — for Extra Small Holes

- This bore gage is designed to measure small holes of .037 to .287 in diameter.
- For models where the dial indicator is optional, refer to page C-52 for recommended indicators.
- Optional stand (**215-120-10**) is available for efficient measurement of multiple small holes.

526-176-20

Measurement Example

Measurement Principle

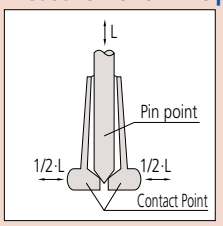

SPECIFICATIONS

Inch

Order No.	Range (in)	Accuracy* (in)	Repeatability* (in)	Bore gage	Dial indicator	Dial protection cover	Setting ring
526-175-10	0.037 - 0.061	0.00016	0.00004	526-175-10	Not supplied	Not supplied	Not supplied
526-165-10	0.059 - 0.156	0.00016		526-165-10			
526-155-10	0.146 - 0.287	0.00024		526-155-10			
526-176-20	0.037 - 0.061	0.00016		526-175-10	**2923AB-10** (Graduation: 0.0001 in)	29AAA149	
526-166-20	0.059 - 0.156	0.00016		526-165-10			
526-156-20	0.146 - 0.287	0.00024		526-155-10			
526-175-11	0.037 - 0.061	0.00016		526-175-10	Not supplied	Not supplied	Supplied*1
526-165-11	0.059 - 0.156	0.00016		526-165-10			
526-155-11	0.146 - 0.287	0.00024		526-155-10			
526-176-21	0.037 - 0.061	0.00016		526-175-10	**2923AB-10** (Graduation: 0.0001 in)	29AAA149	
526-166-21	0.059 - 0.156	0.00016		526-165-10			
526-156-21	0.146 - 0.287	0.00024		526-155-10			

Metric

Order No.	Range (mm)	Accuracy* (µm)	Repeatability* (µm)	Bore gage	Dial indicator	Dial protection cover	Setting ring
526-170-10	0.95 - 1.55	4	1	526-170-10	Not supplied	Not supplied	Not supplied
526-160-10	1.50 - 3.95	4		526-160-10			
526-150-10	3.70 - 7.30	6		526-150-10			
526-172-20	0.95 - 1.55	4		526-170-10	**2109AB-10** (Graduation: 0.001 mm)	29AAA149	
526-162-20	1.50 - 3.95	4		526-160-10			
526-152-20	3.70 - 7.30	6		526-150-10			
526-173-20	0.95 - 1.55	4		526-170-10	**2046AB** (Graduation: 0.01 mm)	29AAA149	
526-163-20	1.50 - 3.95	4		526-160-10			
526-153-20	3.70 - 7.30	6		526-150-10			
526-170-11	0.95 - 1.55	4		526-170-10	Not supplied	Not supplied	Supplied*2
526-160-11	1.50 - 3.95	4		526-160-10			
526-150-11	3.70 - 7.30	6		526-150-10			
526-172-21	0.95 - 1.55	4		526-170-10	**2109AB-10** (Graduation: 0.001 mm)	29AAA149	
526-162-21	1.50 - 3.95	4		526-160-10			
526-152-21	3.70 - 7.30	6		526-150-10			
526-173-21	0.95 - 1.55	4		526-170-10	**2046AB** (Graduation: 0.01 mm)	29AAA149	
526-163-21	1.50 - 3.95	4		526-160-10			
526-153-21	3.70 - 7.30	6		526-150-10			

* Accuracy of the bore gage alone.
Note: Setting rings are not supplied with some models. Please purchase them separately if necessary. For details of setting rings, refer to page C-53.

Setting Rings (Inch)*1

Nominal size

- **Range of Set: 0.037 - 0.061**
  - **177-350**: 0.040 in
  - **177-351**: 0.045 in
  - **177-352**: 0.050 in
  - **177-353**: 0.055 in
  - **177-354**: 0.060 in
- **Range of set: 0.059 - 0.156**
  - **177-355**: 0.07 in
  - **177-356**: 0.08 in
  - **177-357**: 0.09 in
  - **177-358**: 0.10 in
  - **177-359**: 0.11 in
  - **177-360**: 0.12 in
  - **177-361**: 0.13 in
  - **177-362**: 0.14 in
  - **177-363**: 0.15 in
- **Range of Set: 0.146 - 0.287**
  - **177-364**: 0.16 in
  - **177-365**: 0.18 in
  - **177-366**: 0.20 in
  - **177-367**: 0.22 in
  - **177-368**: 0.24 in
  - **177-369**: 0.26 in
  - **177-370**: 0.28 in

Setting Rings (Metric)*2

Nominal size

- **Range of Set: 0.95 - 1.55mm**
  - **177-220**: 1.0 mm
  - **177-222**: 1.1 mm
  - **177-225**: 1.2 mm
  - **177-227**: 1.3 mm
  - **177-230**: 1.4 mm
- **Range of Set: 1.50 - 3.95mm**
  - **177-236**: 1.75 mm
  - **177-239**: 2.00 mm
  - **177-242**: 2.25 mm
  - **177-208**: 2.50 mm
  - **177-246**: 2.75 mm
  - **177-248**: 3.00 mm
  - **177-250**: 3.25 mm
  - **177-252**: 3.50 mm
  - **177-255**: 3.75 mm
- **Range of Set: 3.70 - 7.30mm**
  - **177-204**: 4.0 mm
  - **177-257**: 4.5 mm
  - **177-205**: 5.0 mm
  - **177-263**: 5.5 mm
  - **177-267**: 6.0 mm
  - **177-271**: 6.5 mm
  - **177-275**: 7.0 mm

DIMENSIONS

Unit: mm

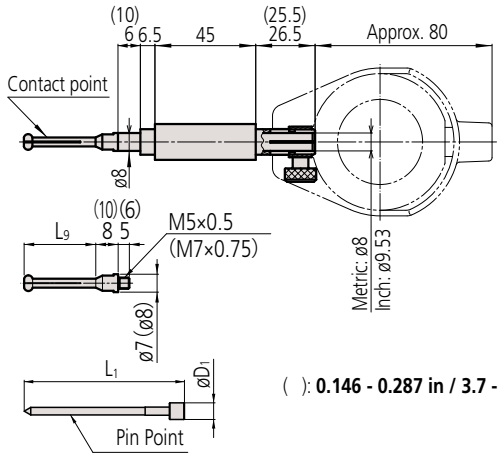

( ): **0.146 - 0.287 in / 3.7 - 7.3 mm range model**

Bore gage (Main body)	Contact point				Pin point		
	Marked No.	**Order No.**	Range	L_9	L_1	$øD_1$	**Order No.**
526-170-10 526-175-10	1.0	**21DAA601A**	0.037 - 0.045 in /0.95 - 1.15 mm	11.5	27.5	2.5	**201435**
	1.1	**21DAA601B**	0.042 - 0.049 in /1.07 - 1.25 mm				
	1.2	**21DAA601C**	0.046 - 0.053 in /1.17 - 1.35 mm				
	1.3	**21DAA601D**	0.050 - 0.057 in /1.27 - 1.45 mm				
	1.4	**21DAA601E**	0.054 - 0.061 in /1.37 - 1.55 mm				
526-160-10 526-165-10	1.75	**21DAA602A**	0.059 - 0.075 in /1.50 - 1.90 mm	17.5	33.8	3.5	**201436**
	2.00	**21DAA602B**	0.071 - 0.087 in /1.80 - 2.20 mm				
	2.25	**21DAA602C**	0.081 - 0.096 in /2.05 - 2.45 mm				
	2.50	**21DAA602D**	0.091 - 0.106 in /2.30 - 2.70 mm	22.5	39.3	3.5	**201437**
	2.75	**21DAA602E**	0.100 - 0.116 in /2.55 - 2.95 mm				
	3.00	**21DAA602F**	0.110 - 0.126 in /2.80 - 3.20 mm				
	3.25	**21DAA602G**	0.120 - 0.136 in /3.05 - 3.45 mm				
	3.50	**21DAA602H**	0.130 - 0.146 in /3.30 - 3.70 mm				
	3.75	**21DAA602J**	0.140 - 0.156 in /3.55 - 3.95 mm				
526-150-10 526-155-10	4.0	**21DAA603A**	0.146 - 0.169 in /3.7 - 4.3 mm	32	53	5.5	**201438**
	4.5	**21DAA603B**	0.165 - 0.189 in /4.2 - 4.8 mm				
	5.0	**21DAA603C**	0.185 - 0.209 in /4.7 - 5.3 mm				
	5.5	**21DAA603D**	0.205 - 0.228 in /5.2 - 5.8 mm				
	6.0	**21DAA603E**	0.224 - 0.248 in /5.7 - 6.3 mm				
	6.5	**21DAA603F**	0.244 - 0.268 in /6.2 - 6.8 mm				
	7.0	**21DAA603G**	0.264 - 0.287 in /6.7 - 7.3 mm				

Note: Pin point and contact point are consumable parts. Please replace them with new ones when degrading of accuracy, operation, or measuring range. After replacement, calibrate using a reference instrument.

Unit: mm

Spanner

210188

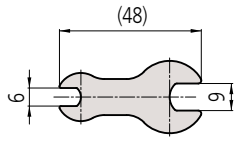

102148

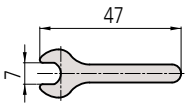

Thickness: 1.5

Extension rod

21AAA259E

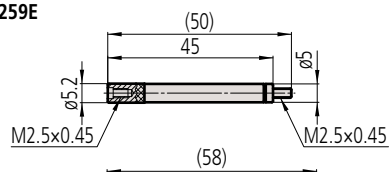

213634

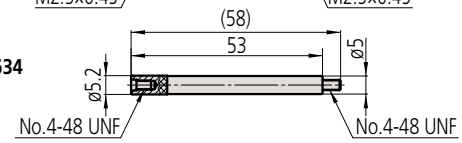

( ): **0.146 - 0.287 in / 3.7 - 7.3 mm range model**

Bore gage	Spanner	Extension rod
526-170-10	**210188**	**21AAA259E**
526-160-10		
526-150-10	**102148**	
526-175-10	**210188**	**213634**
526-165-10		
526-155-10	**102148**	

Note: This is not a component for extending the probing depth. (Standard Accessory)

Get a Quote

Bore Gages

Bore Gages — Split Ball Type SERIES 526 — for Small Holes

- This bore gage is designed to measure small holes of .3 to .7 in diameter.
- For models where the dial indicator is optional, refer to page C-52 for recommended indicators.
- Optional stand (**215-120-10**) is available for efficient measurement of multiple small holes.

526-123-20

C

SPECIFICATIONS

Inch

Order No.	Range (in)	Accuracy* (in)	Repeatability* (in)	Bore gage	Dial indicator	Dial protection cover	Setting ring
526-103	0.3 - 0.4	0.00016	0.00008	**526-103**	Not supplied	Not supplied	Not supplied
526-104	0.4 - 0.7	0.00024		**526-104**			
526-122-20	0.3 - 0.4	0.00016		**526-103**	**2923AB-10** (Graduation: 0.0001 in)	**29AAA149**	
526-123-20	0.4 - 0.7	0.00024		**526-104**			
526-119-20	0.3 - 0.4	0.00016		**526-103**	**2922AB** (Graduation: 0.0005 in)	**29AAA149**	
526-120-20	0.4 - 0.7	0.00024		**526-104**			

Metric

Order No.	Range (mm)	Accuracy* (µm)	Repeatability* (µm)	Bore gage	Dial indicator	Dial protection cover	Setting ring
526-101	7 - 10	4	2	**526-101**	Not supplied	Not supplied	Not supplied
526-102	10 - 18	6		**526-102**			
526-124-20	7 - 10	4		**526-101**	**2109AB-10** (Graduation: 0.001 mm)	**29AAA149**	
526-125-20	10 - 18	6		**526-102**			
526-126-20	7 - 10	4		**526-101**	**2046AB** (Graduation: 0.01 mm)		
526-127-20	10 - 18	6		**526-102**			

* Accuracy of the bore gage alone.
Note: Setting rings are not supplied.
Please purchase them separately if necessary. For details of the setting rings, refer to page C-53.

DIMENSIONS

Unit: mm

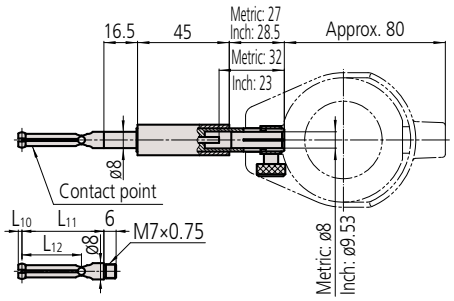

STANDARD ACCESSORIES

Bore gage (Main body)	Contact point						Spanner
	Marked No.	**Order No.**	Range	L_{10}	L_{11}	L_{12}	**Order No.**
526-101 526-103	1	**102469**	0.28 - 0.30 in /7.0 - 7.5 mm	1.8	40	29.2	**102148**
	2	**102470**	0.30 - 0.32 in /7.5 - 8.0 mm				
	3	**102471**	0.32 - 0.34 in /8.0 - 8.5 mm				
	4	**102472**	0.34 - 0.36 in /8.5 - 9.0 mm				
	5	**102473**	0.36 - 0.38 in /9.0 - 9.5 mm				
	6	**102474**	0.38 - 0.40 in /9.5 - 10.0 mm				
526-102 526-104	1	**102454**	0.40 - 0.44 in /10 - 11 mm	2.1	46	38	**102148**
	2	**102455**	0.44 - 0.48 in /11 - 12 mm	2.7			
	3	**102456**	0.48 - 0.52 in /12 - 13 mm				
	4	**102457**	0.52 - 0.56 in /13 - 14 mm				
	5	**102458**	0.56 - 0.60 in /14 - 15 mm				
	6	**102459**	0.60 - 0.64 in /15 - 16 mm				
	7	**102460**	0.64 - 0.68 in /16 - 17 mm				
	8	**102461**	0.68 - 0.72 in /17 - 18 mm				

Note: Contact point is consumable part. Please replace it with new one when degrading of accuracy, operation, or measuring range.

Measurement Example

Measurement Principle

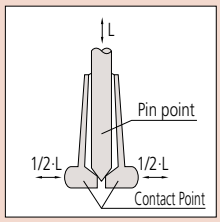

Setting Rings

Refer to pages C-53 to C-56.

Spanner
102148

Unit: mm

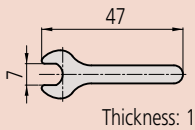

Thickness: 1.5

Operating Method

- Pulling the lever forwards moves the platen upwards and the instrument goes into measurement mode.
- The V-attachment (optional) aids positioning the workpiece on the platen and is useful when measuring a large number of the same size of workpieces.

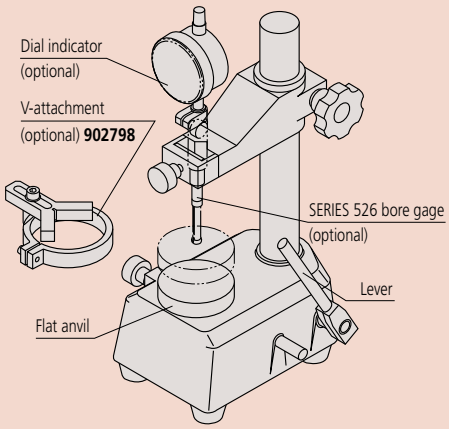

Bore Gage Stand SERIES 215

- Optimal for efficient measurement of multiple small holes with a bore gage. (SERIES **526**)

215-120-10

SPECIFICATIONS

Order No.	Measuring table displacement (mm)	Measuring table
215-120-10	38	Anvil (ø60 mm)

DIMENSIONS

Unit: mm

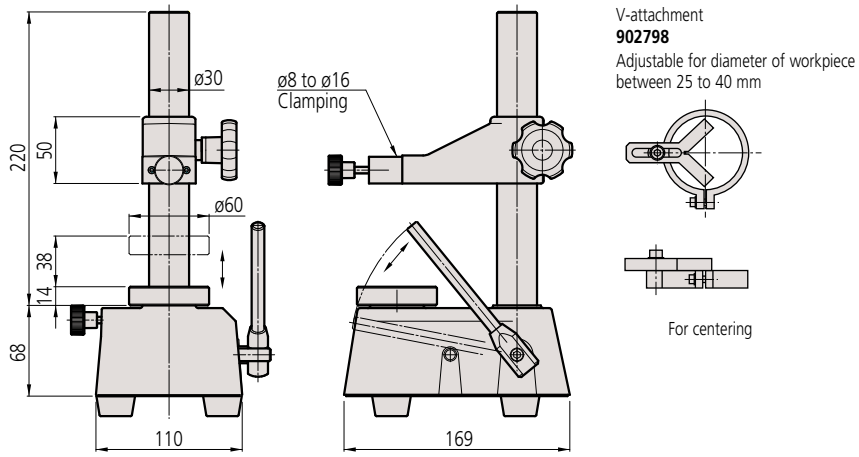

Need Support?

Bore Gages

Bore Gages
SERIES 511 — for Small Holes

- This bore gage is designed to measure the diameters of very small holes.
- For models where the dial indicator is optional, refer to page C-52 for recommended indicators.
- Customized products with a longer rod below the grip or with a carbide anvil are available upon request.
- Optional setting rings are available for accurately setting the gage before measuring. Refer to page C-53.

511-201

Note: For models where the dial indicator is optional, refer to page C-52 for details.

SPECIFICATIONS

Inch

Order No.	Range (in)	Stroke of contact point (in)	Accuracy* (in)	Repeatability* (in)	Adjacent error* (in)	Measuring force (N)	Guide force (N)
511-214	0.24 - 0.4	0.020	0.0002	0.00008	0.00008	2 or less	—
511-205	0.4 - 0.74	0.024					6 or less
511-212-20	0.24 - 0.4	0.020	0.0002	0.00008	0.00008	2 or less	—
511-206-20	0.4 - 0.74	0.024					6 or less
511-213-20	0.24 - 0.4	0.020	0.0002	0.00008	0.00008	2 or less	—
511-207-20	0.4 - 0.74	0.024					6 or less

Order No.	Contents of set					Probing depth (in)
	Bore gage	Dial indicator	Dial protection cover	Anvil	Interchangeable Washer	
511-214	**511-214**	Not supplied	Not supplied	9 pcs.	Not supplied	2
511-205	**511-205**				1 pc.	4
511-212-20	**511-214**	**2923AB-10** (Graduation: 0.0001 in)	**29AAA149**	9 pcs.	Not supplied	2
511-206-20	**511-205**				1 pc.	4
511-213-20	**511-214**	**2922AB** (Graduation: 0.0005 in)	**29AAA149**	9 pcs.	Not supplied	2
511-207-20	**511-205**				1 pc.	4

Metric

Order No.	Range (mm)	Stroke of contact point (mm)	Accuracy* (µm)	Repeatability* (µm)	Adjacent error* (µm)	Measuring force (N)	Guide force (N)
511-209	6 - 10	0.5	5	2	2	2 or less	—
511-201	10 - 18.5	0.6					6 or less
511-210-20	6 - 10	0.5	5	2	2	2 or less	—
511-203-20	10 - 18.5	0.6					6 or less
511-211-20	6 - 10	0.5	5	2	2	2 or less	—
511-204-20	10 - 18.5	0.6					6 or less

Order No.	Contents of set					Probing depth (mm)
	Bore gage	Dial indicator	Dial protection cover	Anvil	Interchangeable Washer	
511-209	**511-209**	Not supplied	Not supplied	9 pcs.	Not supplied	50
511-201	**511-201**				1 pc.	100
511-210-20	**511-209**	**2109AB-10** (Graduation: 0.001 mm)	**29AAA149**	9 pcs.	Not supplied	50
511-203-20	**511-201**				1 pc.	100
511-211-20	**511-209**	**2046AB** (Graduation: 0.01 mm)	**29AAA149**	9 pcs.	Not supplied	50
511-204-20	**511-201**				1 pc.	100

* Accuracy of the bore gage alone.

Measurement Example

Contact Points

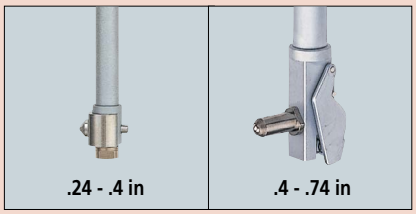

Dail Protection Cover, Recommended Indicators

Refer to page C-52.

Setting Rings

Refer to pages C-53 to C-56.

Special sizes and specifications other than standard can be custom made by special order. Please contact the nearest M³ Solution Center for more information.

Example

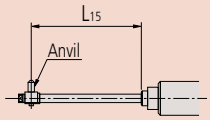

Length below the grip

Model	L15 (mm)
511-209	100, 150, 200, 250
511-201	50, 150, 200, 250, 300

DIMENSIONS

Unit: mm

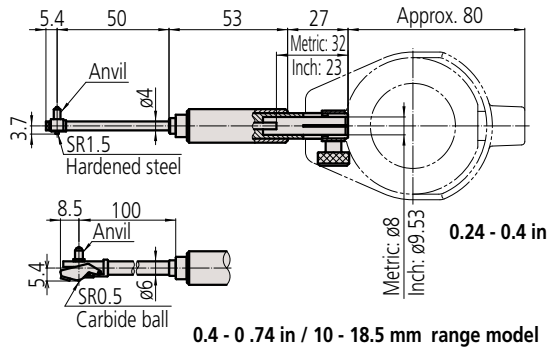

0.24 - 0.4 in / 6 - 10 mm range model

0.4 - 0 .74 in / 10 - 18.5 mm range model

Unit: mm

511-209 / 511-214
Anvil

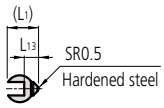

511-201 / 511-205
Anvil

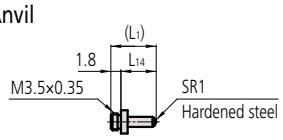

Interchangeable washer
(Supplied only with **511-201 / 511-205**)

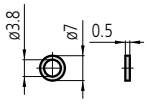

204355

STANDARD ACCESSORIES

Bore gage (Main body)	Anvil					Interchangeable Washer	Spanner
	Marked No.	**Order No.**	Indication of measuring size	L_1	L_{13}	**Order No.**	**Order No.**
511-209 511-214	1	**952168**	0.24 in /6.0 mm	4.7	1.2	Not supplied	**206709**
	2	**952169**	0.26 in /6.5 mm	5.3	1.7		
	3	**952170**	0.28 in /7.0 mm	5.8	2.2		
	4	**952414**	0.30 in /7.5 mm	6.3	2.7		
	5	**952415**	0.32 in /8.0 mm	6.8	3.2		
	6	**952416**	0.34 in /8.5 mm	7.3	3.7		
	7	**952417**	0.36 in /9.0 mm	7.8	4.2		
	8	**952418**	0.38 in /9.5 mm	8.3	4.7		
	9	**952419**	0.40 in /10.0 mm	8.8	5.2		

Bore gage (Main body)	Anvil					Interchangeable Washer	Spanner
	Marked No.	**Order No.**	Indication of measuring size	L_1	L_{14}	**Order No.**	**Order No.**
511-201 511-205	1	**204356**	0.40 in /10 mm	3.8	2	**204355**	**204354**
	2	**204357**	0.44 in /11 mm	4.8	3		
	3	**204358**	0.48 in /12 mm	5.8	4		
	4	**204359**	0.52 in /13 mm	6.8	5		
	5	**204360**	0.56 in /14 mm	7.8	6		
	6	**204361**	0.60 in /15 mm	8.8	7		
	7	**204362**	0.64 in /16 mm	9.8	8		
	8	**204363**	0.68 in /17 mm	10.8	9		
	9	**204364**	0.72 in /18 mm	11.8	10		

Spanner

206709

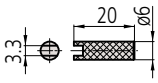

204354

Unit: mm

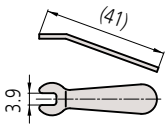

Thickness: 1.5

Need Service?

Mitutoyo

Bore Gages

Bore Gages SERIES 511

- This is a bore gage for measuring .7 to 16 inch inside diameters. It is suitable for highly accurate measurements.
- Carbide-tipped contact point and anvil for durability and wear resistance.
- Optional extension rods can be attached for measuring deep holes.

511-753-20

C

SPECIFICATIONS

Inch

Order No.	Range (in)	Stroke of contact point (in)	Accuracy* (in)	Repeatability* (in)	Adjacent error* (in)	Measuring force (N)	Guide force (N)
511-731	0.7 - 1.4	0.047	0.00008	0.00002	0.00004	4 or less	6 or less
511-732	1.4 - 2.5						
511-733	2.0 - 6.0	0.063				5 or less	10 or less
511-734	4.0 - 6.5						
511-735	6.5 - 10.0					6 or less	15 or less
511-736	10.0 - 16.0						
511-751-20	0.7 - 1.4	0.047	0.00008	0.00002	0.00004	4 or less	6 or less
511-752-20	1.4 - 2.5						
511-753-20	2.0 - 6.0	0.063				5 or less	10 or less
511-754-20	4.0 - 6.5						
511-755-20	6.5 - 10.0					6 or less	15 or less
511-756-20	10.0 - 16.0						
511-741-20	0.7 - 1.4	0.047	0.00008	0.00002	0.00004	4 or less	6 or less
511-742-20	1.4 - 2.5						
511-743-20	2.0 - 6.0	0.063				5 or less	10 or less
511-744-20	4.0 - 6.5						
511-745-20	6.5 - 10.0					6 or less	15 or less
511-746-20	10.0 - 16.0						
511-931-20	0.7 - 6.0	See SPECIFICATIONS of **511-731/732/733**					
511-932-20							
511-935-10							

Order No.	Contents of set							Probing depth (in)
	Bore gage	Dial indicator	Dial protection cover	Anvil	Interchangeable Washer	Sub-Anvil	Spanner	
511-731	**511-731**	Not supplied	Not supplied	9 pcs.	2 pcs.	Not supplied	1 pc.	4
511-732	**511-732**			6 pcs.	4 pcs.	Not supplied	Not supplied	6
511-733	**511-733**			11 pcs.		1 pc.		
511-734	**511-734**			13 pcs.		Not supplied		
511-735	**511-735**			6 pcs.	7 pcs.			10
511-736	**511-736**			5 pcs.		1 pc.		
511-751-20	**511-731**	**2923AB-10** (Graduation: 0.0001 in)	**29AAA149**	9 pcs.	2 pcs.	Not supplied	1 pc.	4
511-752-20	**511-732**			6 pcs.	4 pcs.	Not supplied	Not supplied	6
511-753-20	**511-733**			11 pcs.		1 pc.		
511-754-20	**511-734**			13 pcs.		Not supplied		
511-755-20	**511-735**			6 pcs.	7 pcs.			10
511-756-20	**511-736**			5 pcs.		1 pc.		
511-741-20	**511-731**	**2922AB** (Graduation: 0.0005 in)	**29AAA149**	9 pcs.	2 pcs.	Not supplied	1 pc.	4
511-742-20	**511-732**			6 pcs.	4 pcs.	Not supplied	Not supplied	6
511-743-20	**511-733**			11 pcs.		1 pc.		
511-744-20	**511-734**			13 pcs.		Not supplied		
511-745-20	**511-735**			6 pcs.	7 pcs.			10
511-746-20	**511-736**			5 pcs.		1 pc.		
511-931-20	Set of **511-731/732/733**	**2922AB**	**29AAA149**	See SPECIFICATIONS of **511-731/732/733**				
511-932-20		**2923AB-10**						
511-935-10		**543-312B**						

* Accuracy of the bore gage alone.
Note 1: A 2" sub-anvil is supplied with **511-733**, and a 3" sub-anvil is supplied with **511-736**.
Note 2: It is not permissible to use a sub-anvil other than as supplied as a standard accessory, or widen a measuring range by using multiple sub-anvils. (The measurement accuracy in such cases is not guaranteed).

Contact Points

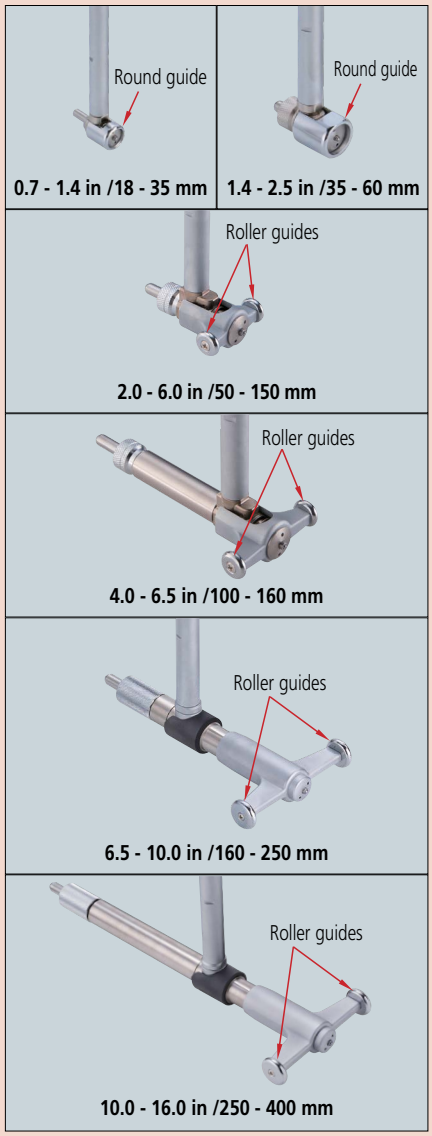

Extension Rod

Refer to page C-51.

Dail Protection Cover, Recommended Indicators

Refer to page C-52.

Setting Rings, Bore Gage Checker, i-Checker

Refer to pages C-53 to C-58.

Need Calibration?

Recommended Digimatic Indicators

Refer to page C-52.

Anvil

A carbide ball is used for the contact point. It is more abrasion resistant than a hardened steel ball and, as its surface is smoother than that of a carbide tip, the workpiece is less liable to be marked.

Comparison of abrasion resistance

Hardened steel ball (conventional model)

Abrasion depth: 0.1 mm
750 HV or more

Carbide ball (current model)

Abrasion depth: 0.001 mm
1350 HV or more

Inspection method
- Load a 0.5 N weight on the anvil, and slide for 1,000 m on abrasive paper of 9 µm (#2000) particle size.

Comparison of marks on the workpiece

Carbide tip (conventional model)

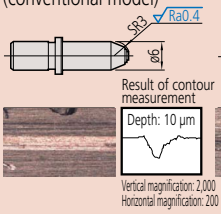

Carbide ball (current model)

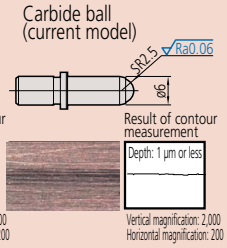

Inspection method
- Load a 4 N weight on the anvil, and slide on the aluminum plate back and forth for 20 times.

SPECIFICATIONS

Metric

Order No.	Range (mm)	Stroke of contact point (mm)	Accuracy* (µm)	Repeatability* (µm)	Adjacent error* (µm)	Measuring force (N)	Guide force (N)
511-701	18 - 35	1.2	2	0.5	1	4 or less	6 or less
511-702	35 - 60						
511-703	50 - 150	1.6				5 or less	10 or less
511-704	100 - 160						
511-705	160 - 250					6 or less	15 or less
511-706	250 - 400						
511-721-20	18 - 35	1.2	2	0.5	1	4 or less	6 or less
511-722-20	35 - 60						
511-723-20	50 - 150	1.6				5 or less	10 or less
511-724-20	100 - 160						
511-725-20	160 - 250					6 or less	15 or less
511-726-20	250 - 400						
511-711-20	18 - 35	1.2	2	0.5	1	4 or less	6 or less
511-712-20	35 - 60						
511-713-20	50 - 150	1.6				5 or less	10 or less
511-714-20	100 - 160						
511-715-20	160 - 250					6 or less	15 or less
511-716-20	250 - 400						
511-921-20	18 - 150	See SPECIFICATIONS of **511-701/702/703**					
511-922-20							
511-925-10							

Order No.	Contents of set							Probing depth (mm)
	Bore gage	Dial indicator	Dial protection cover	Anvil	Interchangeable Washer	Sub-Anvil	Spanner	
511-701	**511-701**	Not supplied	Not supplied	9 pcs.	2 pcs.	Not supplied	1 pc.	100
511-702	**511-702**			6 pcs.	4 pcs.		Not supplied	150
511-703	**511-703**			11 pcs.		1 pc.		
511-704	**511-704**			13 pcs.		Not supplied		
511-705	**511-705**			6 pcs.	7 pcs.			250
511-706	**511-706**			5 pcs.		1 pc.		
511-721-20	**511-701**	**2109AB-10** (Graduation: 0.001 mm)	**29AAA149**	9 pcs.	2 pcs.	Not supplied	1 pc.	100
511-722-20	**511-702**			6 pcs.	4 pcs.		Not supplied	150
511-723-20	**511-703**			11 pcs.		1 pc.		
511-724-20	**511-704**			13 pcs.		Not supplied		
511-725-20	**511-705**			6 pcs.	7 pcs.			250
511-726-20	**511-706**			5 pcs.		1 pc.		
511-711-20	**511-701**	**2046AB** (Graduation: 0.01 mm)	**29AAA149**	9 pcs.	2 pcs.	Not supplied	1 pc.	100
511-712-20	**511-702**			6 pcs.	4 pcs.		Not supplied	150
511-713-20	**511-703**			11 pcs.		1 pc.		
511-714-20	**511-704**			13 pcs.		Not supplied		
511-715-20	**511-705**			6 pcs.	7 pcs.			250
511-716-20	**511-706**			5 pcs.		1 pc.		
511-921-20	Set of **511-701/702/703**	**2046AB**	**29AAA149**	See SPECIFICATIONS of **511-701/702/703**				
511-922-20		**2109AB-10**						
511-925-10		**543-310B**						

* Accuracy of the bore gage alone.

Note 1: A 50 mm sub-anvil is supplied with **511-703**, and a 75 mm sub-anvil is supplied with **511-706**.

Note 2: It is not permissible to use a sub-anvil other than as supplied as a standard accessory, or widen a measuring range by using multiple sub-anvils. (The measurement accuracy in such cases is not guaranteed.)

DIMENSIONS

Unit: mm

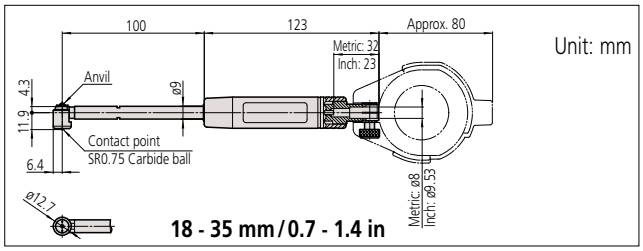

Anvil

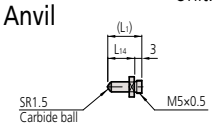

Interchangeable washer

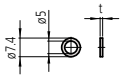

t (mm)	Order No.
0.5	**205623**
1	**205624**

Spanner

102148

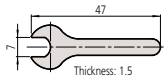

STANDARD ACCESSORIES

Bore gage (Main body)	Anvil				
	Marked No.	Order No.	Indication of measuring size	L1	L14
511-701 **511-731**	1	**21DZA213A**	0.71 in / 18 mm	5.5	2.5
	2	**21DZA213B**	0.79 in / 20 mm	7.5	4.5
	3	**21DZA213C**	0.87 in / 22 mm	9.5	6.5
	4	**21DZA213D**	0.94 in / 24 mm	11.5	8.5
	5	**21DZA213E**	1.02 in / 26 mm	13.5	10.5
	6	**21DZA213F**	1.10 in / 28 mm	15.5	12.5
	7	**21DZA213G**	1.18 in / 30 mm	17.5	14.5
	8	**21DZA213H**	1.26 in / 32 mm	19.5	16.5
	9	**21DZA213J**	1.34 in / 34 mm	21.5	18.5

Mitutoyo

Bore Gages

Bore Gages
SERIES 511

DIMENSIONS

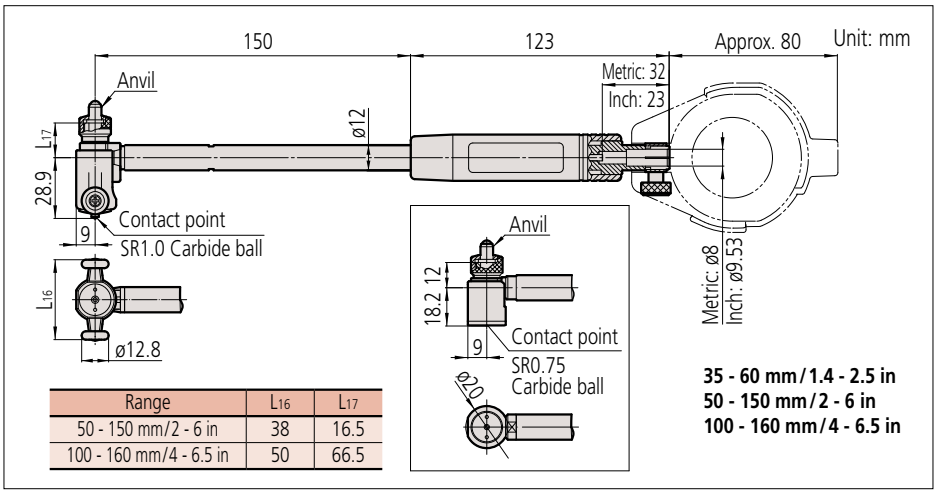

Range	L16	L17
50 - 150 mm/2 - 6 in	38	16.5
100 - 160 mm/4 - 6.5 in	50	66.5

Anvil

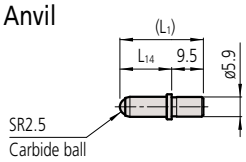

Interchangeable washer

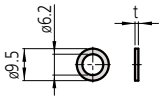

t (mm)	Order No.
0.5	**205457**
1	**205458**
2	**205459**
3	**205460**

STANDARD ACCESSORIES

Bore Gage (Main body)	Anvil				
	Marked No.	**Order No.**	Indication of measuring size	L1	L14
511-702 **511-732**	1	**21DZA232A**	1.38 in /35 mm	15	5.5
	2	**21DZA232B**	1.57 in /40 mm	20	10.5
	3	**21DZA232C**	1.77 in /45 mm	25	15.5
	4	**21DZA232D**	1.97 in /50 mm	30	20.5
	5	**21DZA232E**	2.17 in /55 mm	35	25.5
	6	**21DZA232F**	2.36 in /60 mm	40	30.5
511-703 **511-733** ( ) Using 50 mm/2 in Sub-Anvil	1	**21DZA232A**	1.97 in (3.94 in) /50 mm (100 mm)	15	5.5
	2	**21DZA232B**	2.17 in (4.13 in) /55 mm (105 mm)	20	10.5
	3	**21DZA232C**	2.36 in (4.33 in) /60 mm (110 mm)	25	15.5
	4	**21DZA232D**	2.55 in (4.53 in) /65 mm (115 mm)	30	20.5
	5	**21DZA232E**	2.74 in (4.72 in) /70 mm (120 mm)	35	25.5
	6	**21DZA232F**	2.93 in (4.92 in) /75 mm (125 mm)	40	30.5
	7	**21DZA232G**	3.12 in (5.12 in) /80 mm (130 mm)	45	35.5
	8	**21DZA232H**	3.31 in (5.31 in) /85 mm (135 mm)	50	40.5
	9	**21DZA232J**	3.50 in (5.51 in) /90 mm (140 mm)	55	45.5
	10	**21DZA232L**	3.69 in (5.71 in) /95 mm (145 mm)	60	50.5
	11	**21DZA232M**	3.88 in (5.91 in) /100 mm (150 mm)	65	55.5
511-704 **511-734**	1	**21DZA232A**	3.94 in /100 mm	15	5.5
	2	**21DZA232B**	4.13 in /105 mm	20	10.5
	3	**21DZA232C**	4.33 in /110 mm	25	15.5
	4	**21DZA232D**	4.53 in /115 mm	30	20.5
	5	**21DZA232E**	4.72 in /120 mm	35	25.5
	6	**21DZA232F**	4.92 in /125 mm	40	30.5
	7	**21DZA232G**	5.12 in /130 mm	45	35.5
	8	**21DZA232H**	5.31 in /135 mm	50	40.5
	9	**21DZA232J**	5.51 in /140 mm	55	45.5
	10	**21DZA232L**	5.71 in /145 mm	60	50.5
	11	**21DZA232M**	5.91 in /150 mm	65	55.5
	12	**21DZA232N**	6.10 in /155 mm	70	60.5
	13	**21DZA232P**	6.30 in /160 mm	75	65.5

Sub-Anvil
(Supplied only for **511-703/733**)
Unit: mm

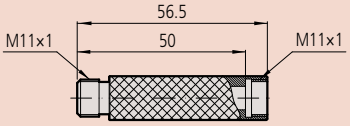

102178

Note: It is not permissible to use a sub-anvil other than as supplied as a standard accessory or widen a measuring range by using multiple sub-anvils. (The measurement accuracy in such cases is not guaranteed.)

Special sizes and specifications other than standard can be custom made by special order. Please visit the nearest M³ Solution Center for more information.

Example

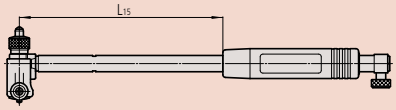

Length below the grip

Model	L15 (mm)
511-701	150, 200, 250, 300, 400, 500
511-702/703/704	100, 200, 250, 300, 400, 500, 600, 700, 800, 900, 1000
511-705/706	100, 150, 200, 300, 400, 500, 600, 700, 800, 900, 1000

Note: The length over listed above is not available.

DIMENSIONS

Unit: mm

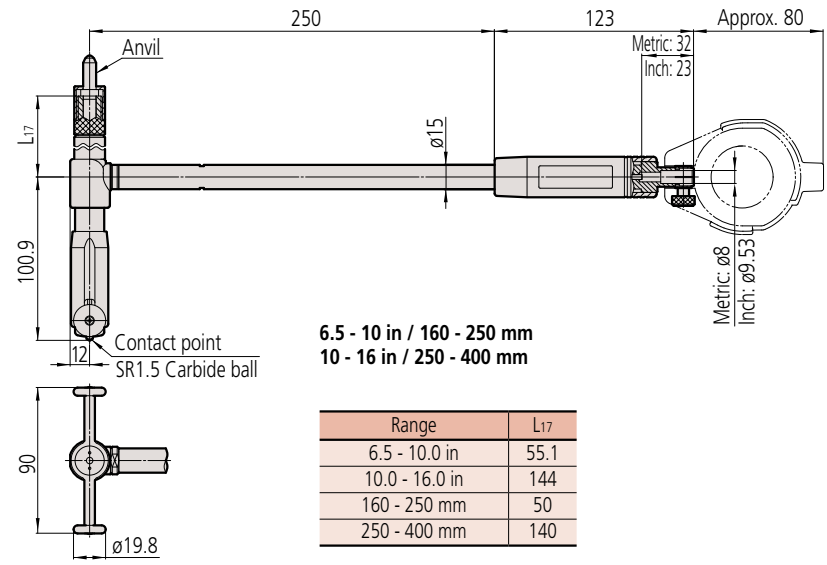

6.5 - 10 in / 160 - 250 mm
10 - 16 in / 250 - 400 mm

Range	L_{17}
6.5 - 10.0 in	55.1
10.0 - 16.0 in	144
160 - 250 mm	50
250 - 400 mm	140

Unit: mm

Anvil

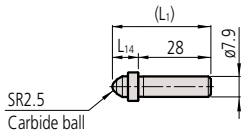

Interchangeable washer

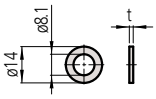

t (mm)	Order No.
0.5	**205467**
1	**205461**
2	**205462**
3	**205463**
4	**205464**
5	**205465**
6	**205466**

Sub-anvil

Supplied only for **511-706** (**202974**) and **511-736** (**202975**)

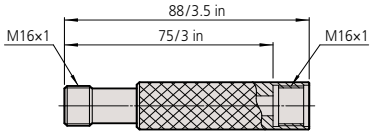

202974 (**511-706**)
202975 (**511-736**)

Note: It is not permissible to use a sub-anvil other than as supplied as a standard accessory, or widen a measuring range by using multiple sub-anvils. (The measurement accuracy in such cases is not guaranteed.)

STANDARD ACCESSORIES

Bore gage (Main body)	Anvil				
	Marked No.	**Order No.**	Indication of measuring size	L_1	L_{14}
511-705 **511-735**	1	**21DZA241A**	6.50 in / 160 mm	38	10
	2	**21DZA241B**	7.09 in / 175 mm	53	25
	3	**21DZA241C**	7.68 in / 190 mm	68	40
	4	**21DZA241D**	8.27 in / 205 mm	83	55
	5	**21DZA241E**	8.86 in / 220 mm	98	70
	6	**21DZA241F**	9.45 in / 235 mm	113	85
511-706 **511-736** ( ) Using 75 mm/3 in Sub-Anvil	1	**21DZA241A**	10.00 in (13.00 in) / 250 mm (325 mm)	38	10
	2	**21DZA241B**	10.59 in (13.59 in) / 265 mm (340 mm)	53	25
	3	**21DZA241C**	11.18 in (14.18 in) / 280 mm (355 mm)	68	40
	4	**21DZA241D**	11.77 in (14.77 in) / 295 mm (370 mm)	83	55
	5	**21DZA241E**	12.36 in (15.36 in) / 310 mm (385 mm)	98	70

Find a Distributor

Bore Gages

Bore Gages
SERIES 511 — Short Leg Type

- This is a bore gage for measuring .7 to 6.5 in inside diameters.
- With a short length below the grip, a lightweight and easy-to-handle body makes it easier to insert the gage in a narrow space or perform measurements on a table.
- Carbide-tipped contact point and anvil for durability and wear resistance.

511-786-20

Measurement Example

Contact Points

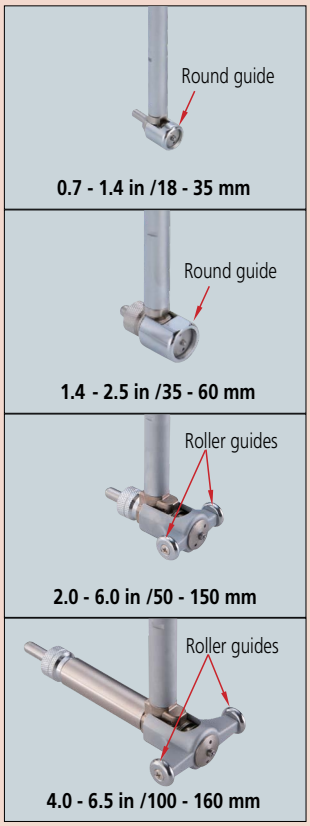

Dial Protection Cover, Recommended Indicators

Refer to page C-52.

Setting Rings, Bore Gage Checker, i-Checker

Refer to pages C-53 to C-58.

SPECIFICATIONS

Inch

Order No.	Range (in)	Stroke of contact point (in)	Accuracy* (in)	Repeatability* (in)	Adjacent error* (in)	Measuring force (N)	Guide force (N)
511-781	0.7 - 1.4	0.047	0.00008	0.00002	0.00004	4 or less	6 or less
511-782	1.4 - 2.5						
511-783	2.0 - 6.0	0.063				5 or less	10 or less
511-784	4.0 - 6.5						
511-791-20	0.7 - 1.4	0.047	0.00008	0.00002	0.00004	4 or less	6 or less
511-792-20	1.4 - 2.5						
511-793-20	2.0 - 6.0	0.063				5 or less	10 or less
511-794-20	4.0 - 6.5						
511-786-20	0.7 - 1.4	0.047	0.00008	0.00002	0.00004	4 or less	6 or less
511-787-20	1.4 - 2.5						
511-788-20	2.0 - 6.0	0.063				5 or less	10 or less
511-789-20	4.0 - 6.5						

Order No.	Contents of set							Probing depth (in)
	Bore gage	Dial indicator	Dial protection cover	Anvil	Interchangeable Washer	Sub-Anvil	Spanner	
511-781	**511-781**	Not supplied	Not supplied	9 pcs.	2 pcs.	Not supplied	1 pc.	2
511-782	**511-782**			6 pcs.	4 pcs.		Not supplied	
511-783	**511-783**			11 pcs.		1 pc.		
511-784	**511-784**			13 pcs.		Not supplied		
511-791-20	**511-781**	**2923AB-10** (Graduation: 0.0001 in)	**29AAA149**	9 pcs.	2 pcs.	Not supplied	1 pc.	2
511-792-20	**511-782**			6 pcs.	4 pcs.		Not supplied	
511-793-20	**511-783**			11 pcs.		1 pc.		
511-794-20	**511-784**			13 pcs.		Not supplied		
511-786-20	**511-781**	**2922AB** (Graduation: 0.0005 in)	**29AAA149**	9 pcs.	2 pcs.	Not supplied	1 pc.	2
511-787-20	**511-782**			6 pcs.	4 pcs.		Not supplied	
511-788-20	**511-783**			11 pcs.		1 pc.		
511-789-20	**511-784**			13 pcs.		Not supplied		

* Accuracy of the bore gage alone.
Note 1: A 2" sub-anvil is supplied with **511-783**.
Note 2: It is not permissible to use a sub-anvil other than as supplied as a standard accessory, or widen a measuring range by using multiple sub-anvils. (The measurement accuracy in such cases is not guaranteed.)

SPECIFICATIONS

Metric

Order No.	Range (mm)	Stroke of contact point (mm)	Accuracy* (µm)	Repeatability* (µm)	Adjacent error* (µm)	Measuring force (N)	Guide force (N)
511-761	18 - 35	1.2	2	0.5	1	4 or less	6 or less
511-762	35 - 60						
511-763	50 - 150	1.6				5 or less	10 or less
511-764	100 - 160						
511-771-20	18 - 35	1.2	2	0.5	1	4 or less	6 or less
511-772-20	35 - 60						
511-773-20	50 - 150	1.6				5 or less	10 or less
511-774-20	100 - 160						
511-766-20	18 - 35	1.2	2	0.5	1	4 or less	6 or less
511-767-20	35 - 60						
511-768-20	50 - 150	1.6				5 or less	10 or less
511-769-20	100 - 160						

Order No.	Contents of set							Probing depth (mm)
	Bore gage	Dial indicator	Dial protection cover	Anvil	Interchangeable Washer	Sub-Anvil	Spanner	
511-761	**511-761**	Not supplied	Not supplied	9 pcs.	2 pcs.	Not supplied	1 pc.	50
511-762	**511-762**			6 pcs.	4 pcs.		Not supplied	
511-763	**511-763**			11 pcs.		1 pc.		
511-764	**511-764**			13 pcs.		Not supplied		
511-771-20	**511-761**	**2109AB-10** (Graduation: 0.001 mm)	**29AAA149**	9 pcs.	2 pcs.	Not supplied	1 pc.	50
511-772-20	**511-762**			6 pcs.	4 pcs.		Not supplied	
511-773-20	**511-763**			11 pcs.		1 pc.		
511-774-20	**511-764**			13 pcs.		Not supplied		
511-766-20	**511-761**	**2046AB** (Graduation: 0.01 mm)	**29AAA149**	9 pcs.	2 pcs.	Not supplied	1 pc.	50
511-767-20	**511-762**			6 pcs.	4 pcs.		Not supplied	
511-768-20	**511-763**			11 pcs.		1 pc.		
511-769-20	**511-764**			13 pcs.		Not supplied		

* Accuracy of the bore gage alone.
Note 1: A 50 mm sub-anvil is supplied with **511-763**.
Note 2: It is not permissible to use a sub-anvil other than as supplied as a standard accessory, or widen a measuring range by using multiple sub-anvils. (The measurement accuracy in such cases is not guaranteed).

DIMENSIONS

Unit: mm

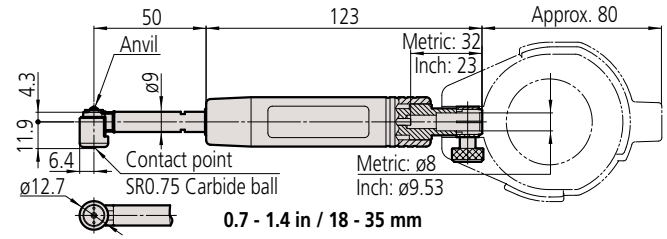

Unit: mm

Anvil

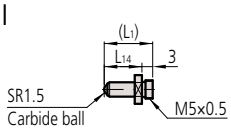

Interchangeable washer

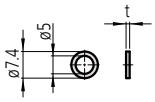

t (mm)	Order No.
0.5	**205623**
1	**205624**

Spanner **102148**

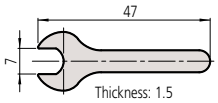

STANDARD ACCESSORIES

Bore gage (Main body)	Anvil				
	Marked No.	**Order No.**	Indication of measuring size	L_1	L_{14}
511-761 **511-781**	1	**21DZA213A**	0.71 in /18 mm	0.22 in /5.5 mm	0.10 in /2.5 mm
	2	**21DZA213B**	0.79 in /20 mm	0.30 in /7.5 mm	0.18 in /4.5 mm
	3	**21DZA213C**	0.87 in /22 mm	0.37 in /9.5 mm	0.26 in /6.5 mm
	4	**21DZA213D**	0.94 in /24 mm	0.45 in /11.5 mm	0.33 in /8.5 mm
	5	**21DZA213E**	1.02 in /26 mm	0.53 in /13.5 mm	0.41 in /10.5 mm
	6	**21DZA213F**	1.10 in /28 mm	0.61 in /15.5 mm	0.49 in /12.5 mm
	7	**21DZA213G**	1.18 in /30 mm	0.69 in /17.5 mm	0.57 in /14.5 mm
	8	**21DZA213H**	1.26 in /32 mm	0.77 in /19.5 mm	0.65 in /16.5 mm
	9	**21DZA213J**	1.34 in /34 mm	0.85 in /21.5 mm	0.73 in /18.5 mm

Mitutoyo
Got Questions?

Bore Gages

Bore Gages
SERIES 511 — Short Leg Type

DIMENSIONS

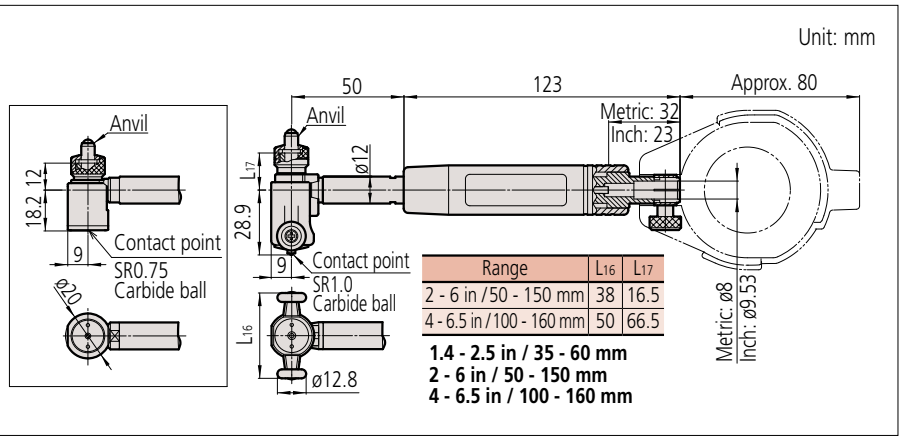

Range	L16	L17
2 - 6 in / 50 - 150 mm	38	16.5
4 - 6.5 in / 100 - 160 mm	50	66.5

Unit: mm

Anvil

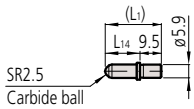

Interchangeable washer

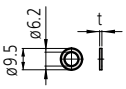

t (mm)	Order No.
0.5	**205457**
1	**205458**
2	**205459**
3	**205460**

Sub-anvil (Supplied only for **511-763** and **511-783**.)

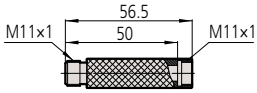

102178

Note: It is not permissible to use a sub-anvil other than as supplied as a standard accessory, or widen a measurement range by using multiple sub-anvils. (The measurement accuracy in such cases is not guaranteed.)

STANDARD ACCESSORIES

Bore gage (Main body)	Anvil				
	Marked No.	**Order No.**	Indication of measuring size	L1	L14
511-762 **511-782**	1	**21DZA232A**	1.38 in /35 mm	15	5.5
	2	**21DZA232B**	1.57 in /40 mm	20	10.5
	3	**21DZA232C**	1.77 in /45 mm	25	15.5
	4	**21DZA232D**	1.97 in /50 mm	30	20.5
	5	**21DZA232E**	2.17 in /55 mm	35	25.5
	6	**21DZA232F**	2.36 in /60 mm	40	30.5
511-763 **511-783** ( ) Using 50 mm/2 in Sub-Anvil	1	**21DZA232A**	1.97 in (3.94 in) /50 mm (100 mm)	15	5.5
	2	**21DZA232B**	2.17 in (4.13 in) /55 mm (105 mm)	20	10.5
	3	**21DZA232C**	2.36 in (4.33 in) /60 mm (110 mm)	25	15.5
	4	**21DZA232D**	2.55 in (4.53 in) /65 mm (115 mm)	30	20.5
	5	**21DZA232E**	2.74 in (4.72 in) /70 mm (120 mm)	35	25.5
	6	**21DZA232F**	2.93 in (4.92 in) /75 mm (125 mm)	40	30.5
	7	**21DZA232G**	3.12 in (5.12 in) /80 mm (130 mm)	45	35.5
	8	**21DZA232H**	3.31 in (5.31 in) /85 mm (135 mm)	50	40.5
	9	**21DZA232J**	3.50 in (5.51 in) /90 mm (140 mm)	55	45.5
	10	**21DZA232L**	3.69 in (5.71 in) /95 mm (145 mm)	60	50.5
	11	**21DZA232M**	3.88 in (5.91 in) /100 mm (150 mm)	65	55.5
511-764 **511-784**	1	**21DZA232A**	3.94 in /100 mm	15	5.5
	2	**21DZA232B**	4.13 in /105 mm	20	10.5
	3	**21DZA232C**	4.33 in /110 mm	25	15.5
	4	**21DZA232D**	4.53 in /115 mm	30	20.5
	5	**21DZA232E**	4.72 in /120 mm	35	25.5
	6	**21DZA232F**	4.92 in /125 mm	40	30.5
	7	**21DZA232G**	5.12 in /130 mm	45	35.5
	8	**21DZA232H**	5.31 in /135 mm	50	40.5
	9	**21DZA232J**	5.51 in /140 mm	55	45.5
	10	**21DZA232L**	5.71 in /145 mm	60	50.5
	11	**21DZA232M**	5.91 in /150 mm	65	55.5
	12	**21DZA232N**	6.10 in /155 mm	70	60.5
	13	**21DZA232P**	6.30 in /160 mm	75	65.5

Recommended Digimatic Indicators
Refer to page C-52.

Talk to Sales

Bore Gages
SERIES 511 — with Micrometer Head

- Micrometer head is attached to the anvil for convenient and accurate dimensional measurements.
- Carbide-tipped contact point for durability and wear resistance.
- Wide-range mic head allows range adjustments to be made quickly and without spacers

511-853-20

Measurement Example

Dial Protection Cover, Recommended Indicators
Refer to page C-52.

Setting Rings, Bore Gage Checker, i-Checker
Refer to pages C-53 to C-58.

Recommended Digimatic Indicators
Refer to page C-52.

Special sizes and specifications other than standard can be custom made by special order. Please visit the nearest M³ Solution Center for more information.

Example

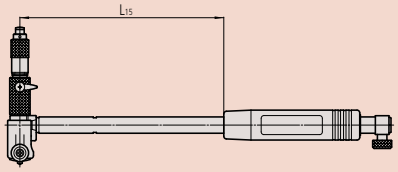

Length below the grip

Model	L15 (mm)
511-803/804	50, 100, 200, 250, 300, 400, 500, 600, 700, 800, 900, 1000
511-805/806/807/808	50, 100, 150, 200, 300, 400, 500, 600, 700, 800, 900, 1000

Note: The length over listed above is not available.

SPECIFICATIONS

Inch

Order No.	Range (in)	Stroke of contact point (in)	Accuracy* (in)	Repeatability* (in)	Adjacent error* (in)	Measuring force (N)	Guide force (N)
511-833	2.4 - 4.0	0.063	0.00008	0.00002	0.00004	5 or less	10 or less
511-834	4.0 - 6.4						
511-835	6.0 - 10.0					6 or less	15 or less
511-836	10.0 - 16.0						
511-837	16.0 - 24.0						20 or less
511-838	24.0 - 32.0						
511-853-20	2.4 - 4.0	0.063	0.00008	0.00002	0.00004	5 or less	10 or less
511-854-20	4.0 - 6.4						
511-855-20	6.0 - 10.0					6 or less	15 or less
511-856-20	10.0 - 16.0						
511-857-20	16.0 - 24.0						20 or less
511-858-20	24.0 - 32.0						
511-843-20	2.4 - 4.0	0.063	0.00008	0.00002	0.00004	5 or less	10 or less
511-844-20	4.0 - 6.4						
511-845-20	6.0 - 10.0					6 or less	15 or less
511-846-20	10.0 - 16.0						
511-847-20	16.0 - 24.0						20 or less
511-848-20	24.0 - 32.0						

Order No.	Contents of set						Probing depth (in)
	Bore gage	Dial indicator	Dial protection cover	Micrometer head	Sub-Anvil	Spanner	
511-833	**511-833**	Not supplied	Not supplied	1 pc.	2 pcs.	3 pcs.	6
511-834	**511-834**				3 pcs.	2 pcs.	
511-835	**511-835**				4 pcs.		10
511-836	**511-836**				3 pcs.		
511-837	**511-837**				2 pcs.		
511-838	**511-838**				2 pcs.		
511-853-20	**511-833**	**2923AB-10** (Graduation: 0.0001 in)	**29AAA149**	1 pc.	2 pcs.	3 pcs.	4
511-854-20	**511-834**				3 pcs.	2 pcs.	6
511-855-20	**511-835**				4 pcs.		
511-856-20	**511-836**				3 pcs.		
511-857-20	**511-837**				2 pcs.		10
511-858-20	**511-838**				2 pcs.		
511-843-20	**511-833**	**2922AB** (Graduation: 0.0005 in)	**29AAA149**	1 pc.	2 pcs.	3 pcs.	4
511-844-20	**511-834**				3 pcs.	2 pcs.	6
511-845-20	**511-835**				4 pcs.		
511-846-20	**511-836**				3 pcs.		
511-847-20	**511-837**				2 pcs.		10
511-848-20	**511-838**				2 pcs.		

* Accuracy of the bore gage alone.
Note 1: Storage boxes for **511-837/838** models are made of wood. The boxes of other models are made of plastic.
Note 2: It is not permissible to expand measuring range using sub-anvils other than as supplied as standard accessories. (The measurement accuracy in such cases is not guaranteed.)

Bore Gages

Bore Gages
SERIES 511 — with Micrometer Head

SPECIFICATIONS

Metric

Order No.	Range (mm)	Stroke of contact point (mm)	Accuracy* (µm)	Repeatability* (µm)	Adjacent error* (µm)	Measuring force (N)	Guide force (N)
511-803	60 - 100	1.6	2	0.5	1	5 or less	10 or less
511-804	100 - 160						
511-805	150 - 250					6 or less	15 or less
511-806	250 - 400						
511-807	400 - 600						20 or less
511-808	600 - 800						
511-823-20	60 - 100	1.6	2	0.5	1	5 or less	10 or less
511-824-20	100 - 160						
511-825-20	150 - 250					6 or less	15 or less
511-826-20	250 - 400						
511-827-20	400 - 600						20 or less
511-828-20	600 - 800						
511-813-20	60 - 100	1.6	2	0.5	1	5 or less	10 or less
511-814-20	100 - 160						
511-815-20	150 - 250					6 or less	15 or less
511-816-20	250 - 400						
511-817-20	400 - 600						20 or less
511-818-20	600 - 800						

Order No.	Contents of set						Probing depth (mm)
	Bore gage	Dial indicator	Dial protection cover	Micrometer head	Sub-Anvil	Spanner	
511-803	**511-803**	Not supplied	Not supplied	1 pc.	2 pcs.	3 pcs.	150
511-804	**511-804**				3 pcs.	2 pcs.	
511-805	**511-805**				4 pcs.		250
511-806	**511-806**				3 pcs.		
511-807	**511-807**				2 pcs.		
511-808	**511-808**				2 pcs.		
511-823-20	**511-803**	**2109AB-10** (Graduation: 0.001 mm)	**29AAA149**	1 pc.	2 pcs.	3 pcs.	150
511-824-20	**511-804**				3 pcs.	2 pcs.	
511-825-20	**511-805**				4 pcs.		250
511-826-20	**511-806**				3 pcs.		
511-827-20	**511-807**				2 pcs.		
511-828-20	**511-808**				2 pcs.		
511-813-20	**511-803**	**2046AB** (Graduation: 0.01 mm)	**29AAA149**	1 pc.	2 pcs.	3 pcs.	150
511-814-20	**511-804**				3 pcs.	2 pcs.	
511-815-20	**511-805**				4 pcs.		250
511-816-20	**511-806**				3 pcs.		
511-817-20	**511-807**				2 pcs.		
511-818-20	**511-808**				2 pcs.		

* Accuracy of the bore gage alone.
Note 1: Storage boxes for **511-807 / 808** models are made of wood. The boxes of other models are made of plastic.
Note 2: It is not permissible to expand measuring range using sub-anvils other than as supplied as standard accessories.
(The measurement accuracy in such cases is not guaranteed).

Recommended Digimatic Indicators

Refer to page C-52.

Find a Distributor

DIMENSIONS

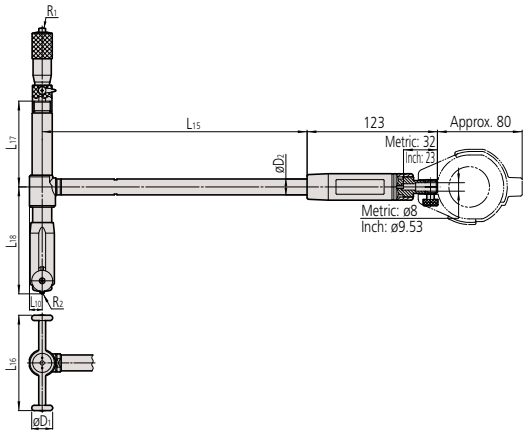

Unit: mm

Range	L15	R1	L18	R2	L10	L16	øD1	øD2	L17
60 - 100 mm	150	SR8	28.9	SR1.0	9	38	ø12.8	ø12	7
100 - 160 mm		SR10				50			16.5
150 - 250 mm	250		70.3	SR1.5	15	78	ø19.8	ø15	25.1
250 - 400 mm			100.9		12	90			81
400 - 600 mm			200.9		16	120			85
600 - 800 mm			300.9						185
2.4 - 4 in	150	SR8	28.9	SR1.0	9	38	ø12.8	ø12	7
4 - 6.4 in		SR10				50			16.5
6 - 10 in	250		70.3	SR1.5	15	78	ø19.8	ø15	25.9
10 - 16 in			100.9		12	90			81
16 - 24 in			200.9		16	120			85
24 - 32 in			300.9						188.2

Contact Points

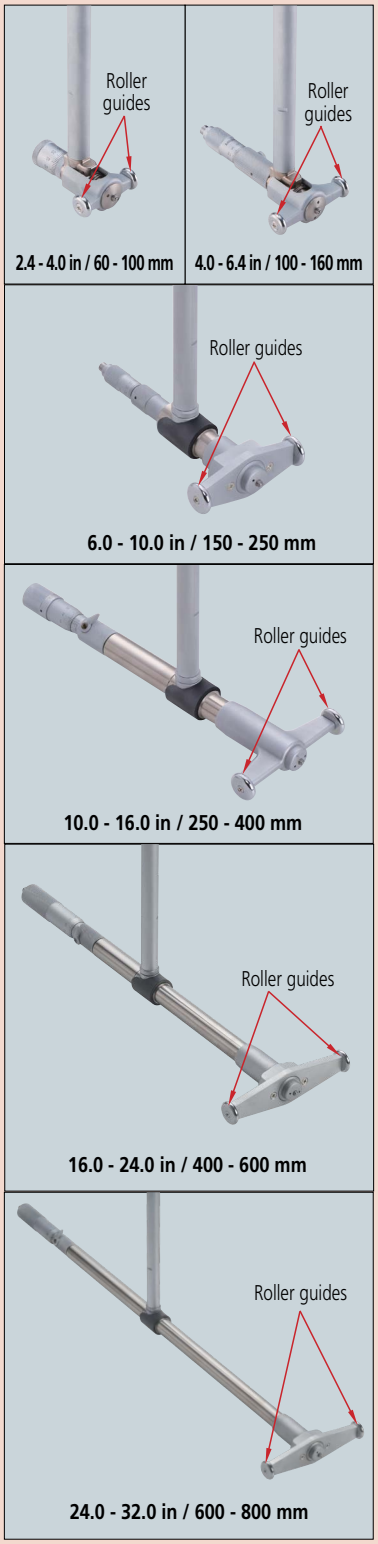

Sub-anvil

Unit: mm

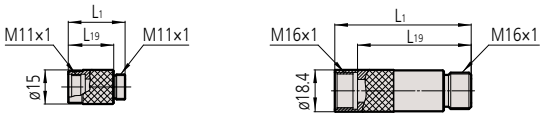

Note: It is not permissible to use a sub-anvil other than as supplied as a standard accessory, or widen a measuring range by using multiple sub-anvils. (The measurement accuracy in such cases is not guaranteed.)

Spanner

301336

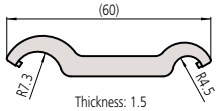

202863

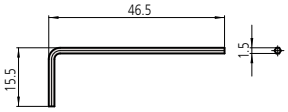

200154

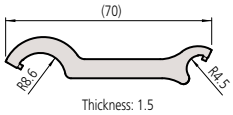

SPECIFICATIONS ACCESSORIES

Inch

Bore gage (Main body)	Micrometer head			Sub-Anvil				Spanner
	Order No.	Stroke (in)	Screw size	Marked No. (in)	**Order No.**	L1 (in)	L19 (in)	**Order No.**
511-833	**21DZA272**	0.4	M11×1	0.4	**208893**	0.6	0.4	**301336** (2 pcs.) **202863** (1 pc.)
				0.8	**208895**	1.0	0.8	
511-834	**21DZA273**	0.5	M11×1	0.4	**208893**	0.6	0.4	**301336** (2 pcs.)
				0.8	**208895** (2 pcs.)	1.0	0.8	
511-835	**21DZA273**	0.5	M11×1	0.4	**208893**	0.6	0.4	**301336** (2 pcs.)
				0.8	**208895** (2 pcs.)	1.0	0.8	
				2	**21DAA493**	2.2	2	
511-836	**21DZA275**	1.0	M16×1	1	**208927**	1.4	1	**200154** (2 pcs.)
				2	**208929** (2 pcs.)	2.4	2	
511-837	**902313**	2.0	M16×1	2	**208929**	2.4	2	**200154** (2 pcs.)
				4	**208933**	4.4	4	
511-838	**902313**	2.0	M16×1	2	**208929**	2.4	2	**200154** (2 pcs.)
				4	**208933**	4.4	4	

Metric

Bore gage (Main body)	Micrometer head			Sub-Anvil				Spanner
	Order No.	Stroke (mm)	Screw size	Marked No. (mm)	**Order No.**	L1 (mm)	L19 (mm)	**Order No.**
511-803	**21DZA267**	10	M11×1	10	**208892**	15	10	**301336** (2 pcs.) **202863** (1 pc.)
				20	**208894**	25	20	
511-804	**21DZA268**	13	M11×1	10	**208892**	15	10	**301336** (2 pcs.)
				20	**208894** (2 pcs.)	25	20	
511-805	**21DZA268**	13	M11×1	10	**208892**	15	10	**301336** (2 pcs.)
				20	**208894** (2 pcs.)	25	20	
				50	**21DAA492**	55	50	
511-806	**953118**	25	M16×1	25	**208926**	35	25	**200154** (2 pcs.)
				50	**208928** (2 pcs.)	60	50	
511-807	**953120**	50	M16×1	50	**208928**	60	50	**200154** (2 pcs.)
				100	**208932**	110	100	
511-808	**953120**	50	M16×1	50	**208928**	60	50	**200154** (2 pcs.)
				100	**208932**	110	100	

Bore Gages

Bore Gages
SERIES 511 — for Blind Holes

- This is a bore gage for measuring diameters near the bottom of a hole.
- Carbide-tipped contact point and anvil for durability and wear resistance.
- Optional extension rods can be attached for measuring deep holes.
- Stroke of contact point (in): 0.047"/ 1.2mm
- Accuracy*: 0.00016"/ 4µm
- Repeatability*: 0.00004"/ 1µm
- Adjacent error*: 0.00004"/ 1µm

511-438-20

Measurement Example

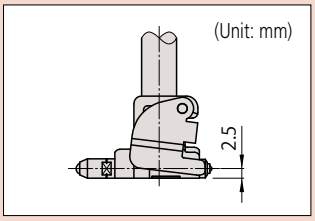

Extension Rod
Refer to page C-51.

Dial Protection Cover, Recommended Indicators
Refer to page C-52.

Setting rings, Bore Gage Checker, i-Checker
Refer to pages C-53 to C-58.

Recommended Digimatic Indicators
Refer to page C-52.

SPECIFICATIONS

Inch

Order No.	Range (in)	Measuring force (N)	Guide force (N)	Contents of set: Bore gage	Dial indicator	Dial protection cover	Anvil	Washer	Probing depth (in)
511-418	0.6 - 1.4	4 or less	6 or less	**511-418**	Not supplied	Not supplied	11 pcs.	1 pc.	6
511-419	1.4 - 2.4			**511-419**			6 pcs.	4 pcs.	
511-420	2.0 - 6.0	5 or less	10 or less	**511-420**			11 pcs.		
511-428-20	0.6 - 1.4	4 or less	6 or less	**511-418**	**2922AB** (Graduation: 0.0005 in)	**29AAA149**	11 pcs.	1 pc.	
511-429-20	1.4 - 2.4			**511-419**			6 pcs.	4 pcs.	
511-430-20	2.0 - 6.0	5 or less	10 or less	**511-420**			11 pcs.		
511-438-20	0.6 - 1.4	4 or less	6 or less	**511-418**	**2923AB-10** (Graduation: 0.0001 in)	**29AAA149**	11 pcs.	1 pc.	
511-439-20	1.4 - 2.4			**511-419**			6 pcs.	4 pcs.	
511-440-20	2.0 - 6.0	5 or less	10 or less	**511-420**			11 pcs.		

Metric

Order No.	Range (mm)	Measuring force (N)	Guide force (N)	Contents of set: Bore gage	Dial indicator	Dial protection cover	Anvil	Washer	Probing depth (mm)
511-415	15 - 35	4 or less	6 or less	**511-415**	Not supplied	Not supplied	11 pcs.	1 pc.	150
511-416	35 - 60			**511-416**			6 pcs.	4 pcs.	
511-417	50 - 150	5 or less	10 or less	**511-417**			11 pcs.		
511-425-20	15 - 35	4 or less	6 or less	**511-415**	**2046AB** (Graduation: 0.01 mm)	**29AAA149**	11 pcs.	1 pc.	150
511-426-20	35 - 60			**511-416**			6 pcs.	4 pcs.	
511-427-20	50 - 150	5 or less	10 or less	**511-417**			11 pcs.		
511-435-20	15 - 35	4 or less	6 or less	**511-415**	**2109AB-10** (Graduation: 0.001 mm)	**29AAA149**	11 pcs.	1 pc.	150
511-436-20	35 - 60			**511-416**			6 pcs.	4 pcs.	
511-437-20	50 - 150	5 or less	10 or less	**511-417**			11 pcs.		

* Accuracy of the bore gage alone.

Note 1: A 10 mm (0.4 in) sub-anvil is supplied with **511-415/425-20/435-20/418/428-20/438-20** and a 50 mm (2 in) sub-anvil is supplied with **511-417/427-20/437-20/420/430-20/440-20**.

Note 2: It is not permissible to use a sub-anvil other than as supplied as a standard accessory, or widen a measuring range by using multiple sub-anvils. (The measurement accuracy in such cases is not guaranteed).

Special sizes and specifications other than standard can be custom made by special order. Please visit the nearest M³ Solution Center for more information.

Example

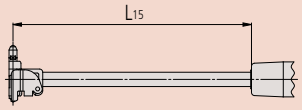

Length below the grip

Model	L15 (mm)
511-415/416/417	50, 150, 200, 250, 300, 400, 500

Contact Points

0.6 - 1.4 in / 15 - 35 mm

1.4 - 2.4 in / 35 - 60 mm

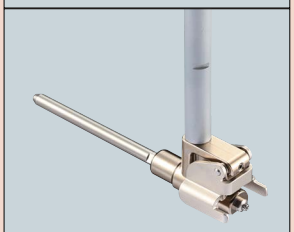

2.0 - 6.0 in / 50 - 150 mm

Recommended Digimatic Indicators

Refer to page C-52.

Need Repair?

DIMENSIONS

Unit: mm

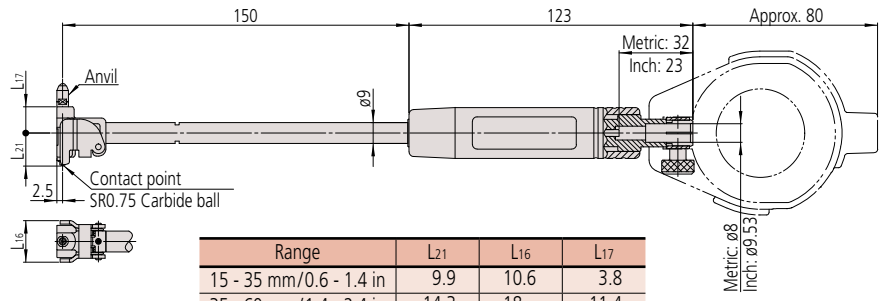

Range	L21	L16	L17
15 - 35 mm/0.6 - 1.4 in	9.9	10.6	3.8
35 - 60 mm/1.4 - 2.4 in	14.3	18	11.4
50 - 150 mm/2.0 - 6.0 in	22.7	22	18

Unit: mm

Anvil

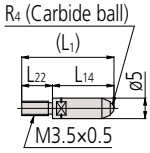

Interchangeable washer

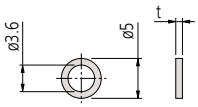

Sub-anvil

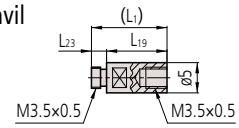

Note: It is not permissible to use a sub-anvil other than as supplied as a standard accessory, or widen a measuring range by using multiple sub-anvils. (The measurement accuracy in such cases is not guaranteed).

Spanner
204354

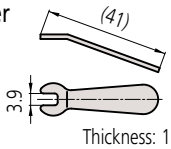

Washer holder
212202

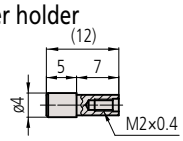

Locking screw
212203

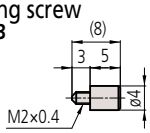

STANDARD ACCESSORIES

Bore gage (Main body)	Anvil							Interchangeable washer		Sub-Anvil		
	Marked No.	Order No.	Indication of measuring size	L1	L22	R4	L14	Order No.	t	Order No.	L23	L19
511-415 **511-418** ( ) Using 10 mm/0.4 in Sub-Anvil	1	**21DZA376A**	0.59 in (0.98 in) / 15 mm (25 mm)	4.5	2.5	SR1	2	**212127**	0.5 mm/0.02 in	**21DAA563**	2.5	10 mm/ 0.4 in
	2	**21DZA376B**	0.63 in (1.02 in) / 16 mm (26 mm)	5.5			3					
	3	**21DZA376C**	0.67 in (1.06 in) / 17 mm (27 mm)	6.5			4					
	4	**21DZA376D**	0.71 in (1.10 in) / 18 mm (28 mm)	7.5			5					
	5	**21DZA376E**	0.75 in (1.14 in) / 19 mm (29 mm)	8.5			6					
	6	**21DZA376F**	0.79 in (1.18 in) / 20 mm (30 mm)	9.5		SR1.5	7					
	7	**21DZA376G**	0.83 in (1.22 in) / 21 mm (31 mm)	10.5			8					
	8	**21DZA376H**	0.87 in (1.26 in) / 22 mm (32 mm)	11.5			9					
	9	**21DZA376J**	0.91 in (1.30 in) / 23 mm (33 mm)	12.5			10					
	10	**21DZA376L**	0.94 in (1.34 in) / 24 mm (34 mm)	13.5			11					
	11	**21DZA376M**	0.98 in (1.38 in) / 25 mm (35 mm)	14.5			12					
511-416 **511-419**	1	**21DZA404A**	1.38 in / 35 mm	17.5	7.5	SR1.5	10	**212127** **212128** **212129** **212130**	0.5 mm/0.02 in 1.0 mm/0.04 in 2.0 mm/0.08 in 3.0 mm/0.12 in			
	2	**21DZA404B**	1.57 in / 40 mm	22.5			15					
	3	**21DZA404C**	1.77 in / 45 mm	27.5			20					
	4	**21DZA404D**	1.97 in / 50 mm	32.5			25					
	5	**21DZA404E**	2.17 in / 55 mm	37.5			30					
	6	**21DZA404F**	2.36 in / 60 mm	42.5			35					
511-417 **511-420** ( ) Using 50 mm/2 in Sub-Anvil	1	**21DZA404A**	1.97 in (3.94 in) / 50 mm (100 mm)	17.5	7.5	SR1.5	10	**212127** **212128** **212129** **212130**	0.5 mm/0.02 in 1.0 mm/0.04 in 2.0 mm/0.08 in 3.0 mm/0.12 in	**21DAA596**	7.5	50 mm/ 2 in
	2	**21DZA404B**	2.17 in (4.13 in) / 55 mm (105 mm)	22.5			15					
	3	**21DZA404C**	2.36 in (4.33 in) / 60 mm (110 mm)	27.5			20					
	4	**21DZA404D**	2.56 in (4.53 in) / 65 mm (115 mm)	32.5			25					
	5	**21DZA404E**	2.76 in (4.72 in) / 70 mm (120 mm)	37.5			30					
	6	**21DZA404F**	2.95 in (4.92 in) / 75 mm (125 mm)	42.5			35					
	7	**21DZA404G**	3.15 in (5.12 in) / 80 mm (130 mm)	47.5			40					
	8	**21DZA404H**	3.35 in (5.31 in) / 85 mm (135 mm)	52.5			45					
	9	**21DZA404J**	3.54 in (5.51 in) / 90 mm (140 mm)	57.5			50					
	10	**21DZA404L**	3.74 in (5.71 in) / 95 mm (145 mm)	62.5			55					
	11	**21DZA404M**	3.94 in (5.91 in) / 100 mm (150 mm)	67.5			60					

Bore Gages

MeasurLink ENABLED
Data Management Software by Mitutoyo

ABSOLUTE™

IP53

Bore Gages
SERIES 511 — ABSOLUTE Digimatic Bore Gages

- An easy-to-use digital bore gage with preset and data output functions not available on analog models for use in various applications. Analog bar indicator allows for fast Go/No-go judgements.
- The minimum value holding function provides easy measurement of hole diameters.
- ABS (ABSOLUTE) type bore gages are not subject to overspeed error.
- The display and grip can be rotated up to 320° and the display can be inclined up to 90° so that it is easily readable from any direction.
- Up to four extension rods (optional) can be used for measuring at the bottom of a hole 2 m deep.

C

511-521

Measurement Example

Function

- Preset function
- Master value registration (3 values maximum)
- Tolerance judgment
- Upper/lower limit registration (3 values maximum)
- Minimum value holding
- Data output
- Display rotation (320°)
- Display inclination (90°, 7 steps)
- Low battery alarm display
- Error display

Extension Rod (Optional)

250 mm (10 in): **21DZA089**
500 mm (20 in): **21DZA081**
Up to four extension rods can be jointed, and a maximum length of 2 m is allowed.

Optional Output Devices

Order No.	Description
Wired	
264-020	USB Input tool (**IT-020U**)
- 905338	Connecting Cable (**1m**)
- 905409	Connecting Cable (**2m**)
06AFM380F	USB Input Tool Direct (**2m**)
Wireless	
264-622	Transmitter (**IP67**)
264-626	Transmitter (**IP67, Bluetooth**)
264-623	Transmitter (**Buzzer**)
264-627	Transmitter (**Buzzer, Bluetooth**)
- 02AZD790F	Connecting Cable
- 02AZE140F	Connecting Cable (**foot switch compatible**)

Note: Model uses connector type "F"

SPECIFICATIONS

Inch

Order No.	511-521	511-522
Range	1.8 - 4.0 in	4.0 - 6.5 in
Stroke of contact point	0.048 in/1.2 mm	
Resolution	0.00005 in/0.001 mm	
Wide range accuracy	0.0001 in/0.003 mm or less	
Adjacent error	0.00008 in/0.002 mm or less	
Repeatability	0.0001 in/0.002 mm or less	
Measuring force	5 N or less	
Guide force	10 N or less	
Position detection method	ABSOLUTE electrostatic linear encoder	
Sampling frequency	50 times/s	
Dust / Water protection level	IP53	
Net weight	500 g	570 g

Metric

Order No.	511-501	511-502
Range	45 - 100 mm	100 - 160 mm
Stroke of contact point	1.2 mm	
Resolution	0.001 mm	
Wide range accuracy	0.003 mm or less	
Adjacent error	0.002 mm or less	
Repeatability	0.002 mm or less	
Measuring force	5 N or less	
Guide force	10 N or less	
Position detection method	ABSOLUTE electrostatic linear encoder	
Sampling frequency	50 times/s	
Dust / Water protection level	IP53	
Net weight	500 g	570 g

- Power source: SR44 battery (2pc.), **938882** included as standard (for operational checks)
- Battery life: Approx. 9 months under normal use

Setting Rings, Bore Gage Checker, i-Checker

Refer to pages C-53 to C-58.

Gage Blocks and Block Sets for Setting the Origin or Master Value (optional)

• Typical application

• Rectangular gage blocks
Note: Available only for **511-501/521**
516-118-10
516-118-60 with calibration certificate

Description*		Order No.	Qty
Nominal length (mm)	1	**611611-021**	1
	2	**611612-021**	1
	3	**611613-021**	1
	5	**611615-021**	1
	10	**611671-021**	1
	20	**611672-021**	1
	30	**611673-021**	1
	40	**611674-021**	1
Flat jaw		**630030**	1 pair (2 pcs.)
Holder 160 mm		**619004**	1
Inspection certificate (8 pcs.)		—	1

* Equivalent to JIS B 7506 Grade 0

• Square gage blocks
Note: Available only for **511-501/521**
516-119-10
516-119-60 with calibration certificate

Description*		Order No.	Qty
Nominal length (mm)	1	**614611-021**	1
	2	**614612-021**	1
	3	**614613-021**	1
	5	**614615-021**	1
	10	**614671-021**	1
	20	**614672-021**	1
	30	**614673-021**	1
	40	**614674-021**	1
Flat jaw		**619072**	1 pair (2 pcs.)
Tie rod 3 in		**619062**	1
Tie rod 2 1/4 in		**619063**	1
Tie rod 1 1/2 in		**619064**	1
Flat head screw 1 1/4 in		**619057**	2
Flat head screw 5/8 in		**619058**	2
Inspection certificate (8 pcs.)		—	1

* Equivalent to JIS B 7506 Grade 0

Where to Buy

DIMENSIONS

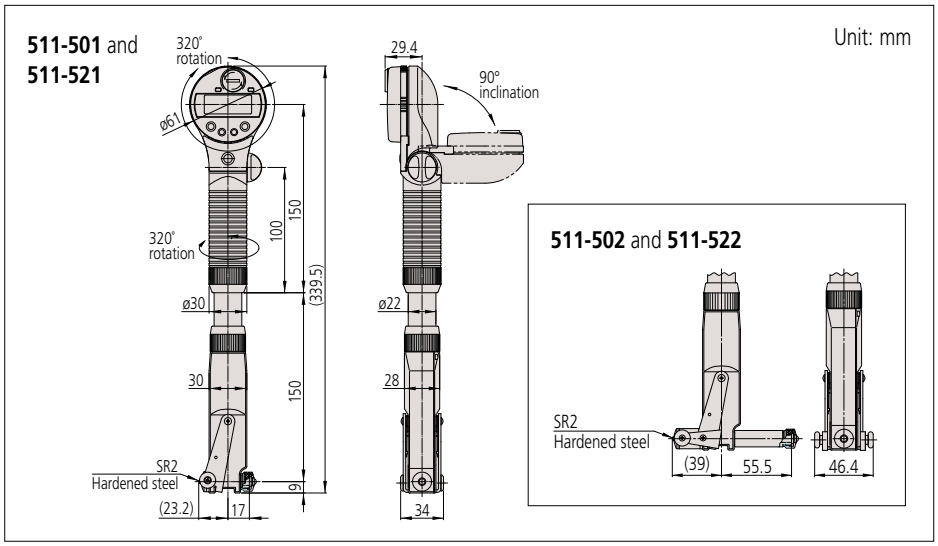

Extension rod (optional)

Unit: mm

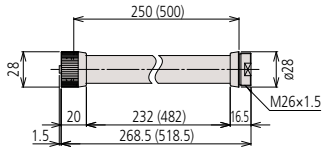

( ): 500 mm type

STANDARD ACCESSORIES

Bore gage (Main body)	Anvil Marked No.	Order No.	Indication of measuring size	L_1 (mm)	L_{14} (mm)	Interchangeable washer Order No.	t
511-501 511-521	1	**21DZA232A**	1.8 in /45 mm	15	5.5	**205457 205458 205459 205460**	0.02 in /0.5 mm 0.04 in /1.0 mm 0.08 in /2.0 mm 0.12 in /3.0 mm
	2	**21DZA232B**	2.0 in /50 mm	20	10.5		
	3	**21DZA232C**	2.2 in /55 mm	25	15.5		
	4	**21DZA232D**	2.4 in /60 mm	30	20.5		
	5	**21DZA232E**	2.6 in /65 mm	35	25.5		
	6	**21DZA232F**	2.8 in /70 mm	40	30.5		
	7	**21DZA232G**	3.0 in /75 mm	45	35.5		
	8	**21DZA232H**	3.2 in /80 mm	50	40.5		
	9	**21DZA232J**	3.4 in /85 mm	55	45.5		
	10	**21DZA232L**	3.6 in /90 mm	60	50.5		
	11	**21DZA232M**	3.8 in /95 mm	65	55.5		
	12	**21DZA232N**	4.0 in /100 mm	70	60.5		
511-502 511-522	1	**21DZA232A**	4.0 in /100 mm	15	5.5	**205457 205458 205459 205460**	0.02 in /0.5 mm 0.04 in /1.0 mm 0.08 in /2.0 mm 0.12 in /3.0 mm
	2	**21DZA232B**	4.2 in /105 mm	20	10.5		
	3	**21DZA232C**	4.4 in /110 mm	25	15.5		
	4	**21DZA232D**	4.6 in /115 mm	30	20.5		
	5	**21DZA232E**	4.8 in /120 mm	35	25.5		
	6	**21DZA232F**	5.0 in /125 mm	40	30.5		
	7	**21DZA232G**	5.2 in /130 mm	45	35.5		
	8	**21DZA232H**	5.4 in /135 mm	50	40.5		
	9	**21DZA232J**	5.6 in /140 mm	55	45.5		
	10	**21DZA232L**	5.8 in /145 mm	60	50.5		
	11	**21DZA232M**	6.0 in /150 mm	65	55.5		
	12	**21DZA232N**	6.2 in /155 mm	70	60.5		
	13	**21DZA232P**	6.4 in /160 mm	75	65.5		

Anvil

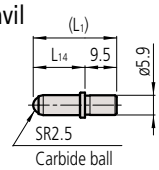

Interchangeable washer

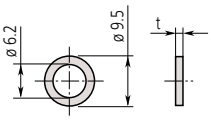

Unit: mm

C

Bore Gages

Extension Rod
SERIES 511 — Accessories for Bore Gages

- Extension rods are available to assist in deep-hole measurement. (For applicable combination with bore gages, see the table below).

Note 1: When using a 500 mm (or longer) extension rod, use the bore gage in an upright position.
Note 2: Only one extension rod can be attached to a bore gage. Accuracy and stability cannot be guaranteed with more than one rod.
Note 3: The extension rod cannot be used for products with a custom size or custom specifications.

C

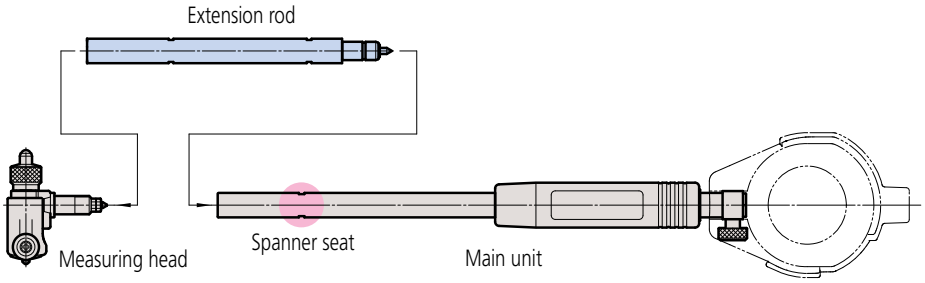

SPECIFICATIONS

Applicable model	Extension rod length (mm)					Extension rod diameter (mm)	Spanner Order No.
Order No.	125	250	500	750	1000		
511-701/511-731	**953549**	**953550**	**953551**	—	—	ø9	**102148** (2 pcs.)
511-415/511-418							
511-416/511-419							
511-417/511-420							
511-440-20/511-437-20							
511-702/511-732	**953552**	**953553**	**953554**	**953555**	**953556**	ø12	**212556** (2 pcs.)
511-703/511-733							
511-704/511-734							
511-803/511-833							
511-804/511-834							
511-705/511-735	**953557**	**952361**	**953558**	**953559**	**953560**	ø15	**212556** (2 pcs.)
511-706/511-736							
511-805/511-835							
511-806/511-836							
511-807/511-837							
511-808/511-838							

Note 1: Spanners are supplied as standard and are included with each Extension Rod.

Get a Quote

Recommended Indicators Accessories for Bore Gages

- These are the recommended indicators for bore gages. Select the best one for your application.

Note: Among indicators other than those recommended, the following types of indicator cannot be used.
- Indicators with a total length of F and G of less than 31.8 mm
- Indicators with a measuring range of more than 12.7 mm (ISO/JIS Type)/0.9 in (ASME/ANSI Type)
- Dust-proof and water-proof indicators with a spindle covered with rubber

Please contact us if you have any questions about products.

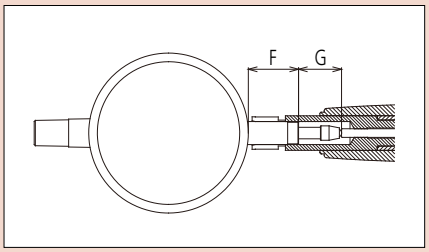

RECOMMENDED INDICATORS

543-312B-10
ABSOLUTE Digimatic Indicator
Designed for Bore Gages
Resolution .00005 in
Refer to page F-15 for details.

543-702 B
ABSOLUTE Digimatic Indicator
Resolution 20 µinch
Refer to page F-5 for details.

2923AB-10
Graduation .0001 in,
Refer to page F-41 for details.

2922AB
Graduation .0005 in,
Refer to page F-41 for details.

DIAL PROTECTION COVER - 29AAA149

- The cover protects the indicator from unexpected impact while handling the bore gage.
- Can be used for both Digital & Dial recommended gages.

Note: This protective cover is intended to be attached to a bore gage and cannot be used for a dial indicator or Digimatic indicator alone.

Unit: mm

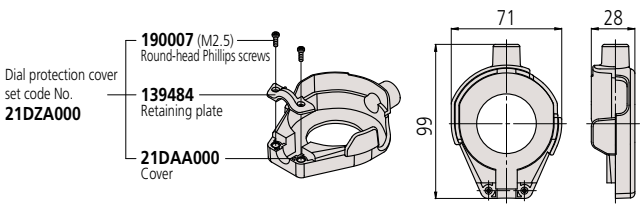

Bore Gages

Setting Rings
SERIES 177 — Accessories for Inside Micrometers, Holtest and Dial Bore Gages

- Used for quick and accurate setting of dial bore gages, Holtest, and inside micrometers.
- Actual diameter is marked in 10 µinch / 0.001 mm increments. (Measuring position of dimension is the center of the height T).
- These Setting Rings are designed for reference setting of ID type gages. These follow Mitutoyo factory standards but do not follow the ASME B89.1.5 classification system. (i.e. do not follow Class XX, X, etc.).

C

Steel Setting Rings

177-300

CERA Setting Rings

177-432

DIMENSIONS

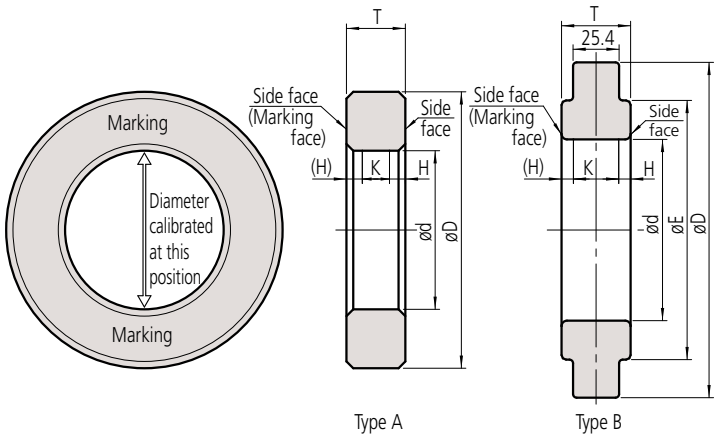

Made-To-Order

- Custom-made setting rings
  Mitutoyo can manufacture settings rings to the size and design you need.
- Nominal size range
  1 mm to 305 mm/0.1 in to 12 in (steel)
  4 mm to 50 mm/0.16 in to 2 in (ceramic)
- Nominal size increment
  0.01 mm (up to 45 mm)
  0.02 mm (over 45 mm)
  0.0001 in (inch)

Need Support?

SPECIFICATIONS

Steel Setting Rings

Inch

Order No.	Nominal size ød (in)	Dimensions (mm)			Type	Accuracy				
		øD	øE	T		Max variation between nominal and actual marked diameter (in)	Uncertainty of marked diameter value*1 (in)	Roundness/ Cylindricity*2 (in)	Distance from the side face H (mm)	Size of warranted calibration surface K (mm)
177-209	0.1	25	—	7	A	±0.0004	0.00006	0.00004	1.7	3.6
177-206	0.16	25	—	7	A					
177-207	0.24	25	—	7	A					
177-281	0.275	25	—	7	A				2.0	3.0
177-179	0.35	32	—	10	A					6.0
177-283	0.425	32	—	10	A					
177-180	0.5	32	—	10	A					
177-181	0.6	38	—	10	A					
177-182	0.65	45	—	10	A					
177-183	0.7	45	—	10	A					
177-287	0.8	45	—	10	A					
177-184	1	53	—	15	A				3.2	8.6
177-289	1.2	71	—	15	A					
177-185	1.4	71	—	15	A					
177-291	1.6	71	—	15	A					
177-186	1.8	85	—	15	A				3.7	7.6
177-187	2	85	—	20	A	±0.0008				12.6
177-293	2.4	112	—	20	A					
177-315	2.5	112	—	20	A			0.00006	4.2	11.6
177-188	2.8	112	—	20	A					
177-317	3	125	—	25	A					16.6
177-295	3.2	125	—	25	A					
177-319	3.5	140	—	25	A					
177-189	3.6	140	—	25	A					
177-297	4	160	—	25	A			0.00008		
177-299	5	210	168	38.1	B		0.00010		5.3	27.5
177-301	6	235	187	38.1	B					
177-303	7	260	215	38.1	B			0.00010		
177-305	8	311	244	38.1	B					
177-307	9	337	264	38.1	B					
177-309	10	362	290	38.1	B			0.00012		
177-311	11	413	321	38.1	B					
177-313	12	438	340	38.1	B					

*1 Dimension measuring position is the center of the height T.

*2 Cylindricity is defined as per JIS B 0621 Definitions and designations of geometrical deviations, Section 4.4 "Cylindricity." Cylindricity is measured using three cross-sections between the top and bottom face of a ring, namely, close to the face near each side and the center.

Bore Gages

Setting Rings
SERIES 177 — Accessories for Inside Micrometers, Holtest and Dial Bore Gages

SPECIFICATIONS
Steel Setting Rings

Metric

Order No.	Nominal size ød (mm)	Dimensions (mm)			Type	Accuracy				
		øD	øE	T		Max variation between nominal and actual marked diameter (µm)	Uncertainty of marked diameter value*1 (µm)	Roundness/ Cylindricity*2 (µm)	Distance from the side face H (mm)	Size of warranted calibration surface K (mm)
177-220	1	20	—	4	A	±10	1.5	1.0	1.6	0.8
177-222	1.1	20	—	4	A					
177-225	1.2	20	—	4	A					
177-227	1.3	20	—	4	A					
177-230	1.4	20	—	4	A					
177-236	1.75	25	—	5	A					1.8
177-239	2	25	—	5	A					
177-242	2.25	25	—	5	A					
177-208	2.5	25	—	7	A				1.7	3.6
177-246	2.75	25	—	7	A					
177-248	3	25	—	7	A					
177-250	3.25	25	—	7	A					
177-252	3.5	25	—	7	A					
177-255	3.75	25	—	7	A					
177-204	4	25	—	7	A					
177-257	4.5	25	—	7	A					
177-205	5	25	—	7	A					
177-263	5.5	25	—	7	A					
177-267	6	25	—	7	A					
177-271	6.5	25	—	7	A					
177-275	7	25	—	7	A					
177-125	8	32	—	10	A				2.0	6.0
177-279	9	32	—	10	A					
177-126	10	32	—	10	A					
177-284	12	32	—	10	A					
177-132	14	38	—	10	A					
177-177	16	45	—	10	A					
177-133	17	45	—	10	A					
177-285	18	45	—	10	A					
177-286	20	45	—	10	A					
177-139	25	53	—	15	A				3.2	8.6
177-288	30	71	—	15	A					
177-140	35	71	—	15	A					
177-290	40	71	—	15	A					
177-178	45	85	—	15	A				3.7	7.6
177-146	50	85	—	20	A	±20				12.6
177-292	60	112	—	20	A					
177-314	62	112	—	20	A			1.5		
177-147	70	112	—	20	A					
177-316	75	125	—	25	A				4.2	16.6
177-294	80	125	—	25	A					
177-318	87	140	—	25	A					
177-148	90	140	—	25	A					
177-296	100	160	—	25	A			2.0		
177-298	125	210	168	38.1 (25.4)	B		2.5		5.3	27.5
177-300	150	235	187		B					
177-302	175	260	215		B			2.5		
177-304	200	311	244		B					
177-306	225	337	264		B					
177-308	250	362	290		B			3.0		
177-310	275	413	321		B					
177-312	300	438	340		B					

*1 Dimension measuring position is the center of the height T.
*2 Cylindricity is defined as per JIS B 0621 Definitions and designations of geometrical deviations, Section 4.4 "Cylindricity." Cylindricity is measured using three cross-sections between the top and bottom face of a ring, namely, close to the face near each side and the center.

Need Service?

SPECIFICATIONS

CERA Setting Rings

Inch

Order No.	Nominal size ød (in)	Dimensions (mm)			Type	Accuracy				
		øD	øE	T		Max variation between nominal and actual marked diameter (in)	Uncertainty of marked diameter value*1 (in)	Roundness/ Cylindricity*2 (in)	Distance from the side face H (mm)	Size of warranted calibration surface K (mm)
177-518	0.16	25	—	7	A	±0.0004	0.00006	0.00004	1.7	3.6
177-520	0.24	25	—	7	A					
177-522	0.275	25	—	7	A					
177-523	0.35	32	—	10	A				2.0	6.0
177-524	0.425	32	—	10	A					
177-525	0.5	32	—	10	A					
177-527	0.65	45	—	10	A					
177-529	0.8	45	—	10	A					
177-530	1	53	—	15	A				3.2	8.6
177-531	1.2	71	—	15	A					
177-532	1.4	71	—	15	A					
177-533	1.6	71	—	15	A					
177-534	1.8	85	—	15	A				3.7	7.6

Metric

Order No.	Nominal size ød (mm)	Dimensions (mm)			Type	Accuracy				
		øD	øE	T		Max variation between nominal and actual marked diameter (µm)	Uncertainty of marked diameter value*1 (µm)	Roundness/ Cylindricity*2 (µm)	Distance from the side face H (mm)	Size of warranted calibration surface K (mm)
177-418	4	25	—	7	A	±10	1.5	1.0	1.7	3.6
177-420	6	25	—	7	A					
177-423	8	32	—	10	A				2.0	6.0
177-424	10	32	—	10	A					
177-425	12	32	—	10	A					
177-427	16	45	—	10	A					
177-429	20	45	—	10	A					
177-430	25	53	—	15	A				3.2	8.6
177-431	30	71	—	15	A					
177-432	35	71	—	15	A					
177-433	40	71	—	15	A					
177-434	45	85	—	15	A				3.7	7.6

*1 Dimension measuring position is the center of the height T.
*2 Cylindricity is defined as per JIS B 0621 Definitions and designations of geometrical deviations, Section 4.4 "Cylindricity." Cylindricity is measured using three cross-sections between the top and bottom face of a ring, namely, close to the face near each side and the center.

Bore Gages

Bore Gage Checker SERIES 515

- This product is a precision device that uses gage blocks and plain jaws to perform base point adjustment (zero point adjustment) for a bore gage, previously performed using ring gages. For bore gages with measuring ranges of .7 in to 16 in (18 mm to 400 mm).
- Can be used in both vertical and horizontal positions.

515-590

Measurement Example

Standard Accessories

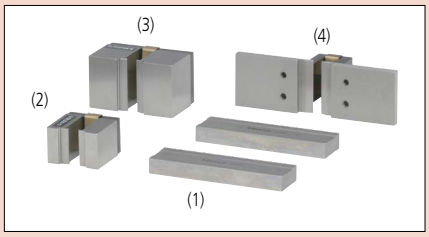

(1) Parallel jaw 2 pcs. **630030**
(2) Attachment A **940088**
(3) Attachment B **940089**
(4) Attachment C **940090**

SPECIFICATIONS

Order No.	Applicable range	Flatness of parallel jaw	Parallelism of parallel jaw
515-590	0.7 - 16 in (18 - 400 mm)	0.5 µm	1 µm

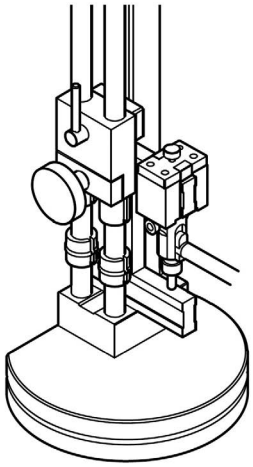

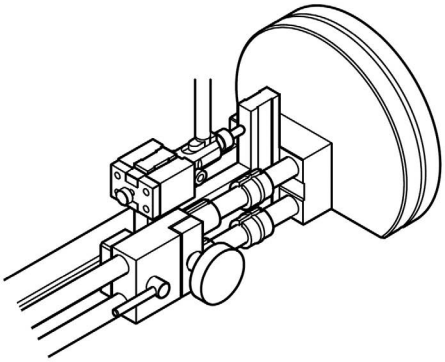

Need Calibration?

Bore Gage and Indicator Calibration i-Checker IC2000

• Refer to page F-87

Bore Gages

Digimatic Indicators

Dial Indicators

Featured Products

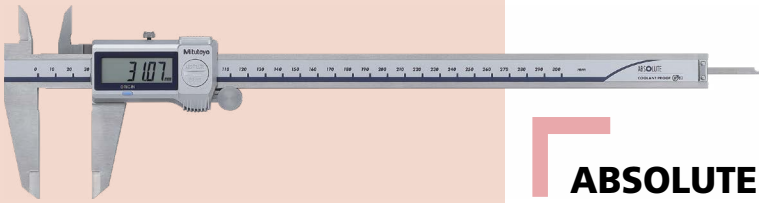

ABSOLUTE Coolant Proof Caliper

SERIES 500 — IP67 Dust/Water Protection

Refer to page D-3 for details.

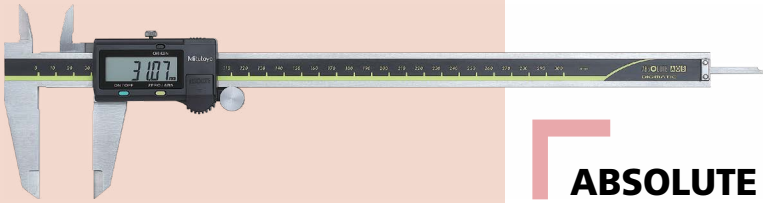

ABSOLUTE Digimatic Caliper

SERIES 500 — ABSOLUTE Encoder Technology

Refer to page D-5 for details.

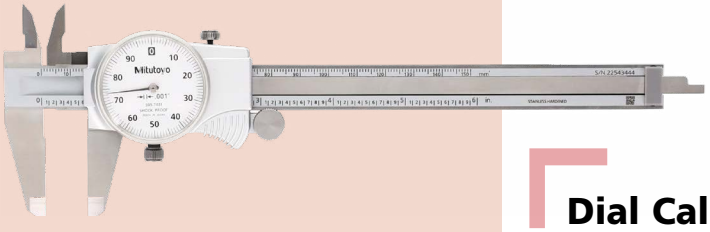

Dial Caliper

Series 505 — Shock-resistant

Refer to page D-8 for details.

Carbon Fiber Calipers

Series 552 — Wide-range, Lightweight, Durable Carbon Fiber Beams and Jaws with Steel or CERA Inserts/Contacts

Refer to page D-13 for details.

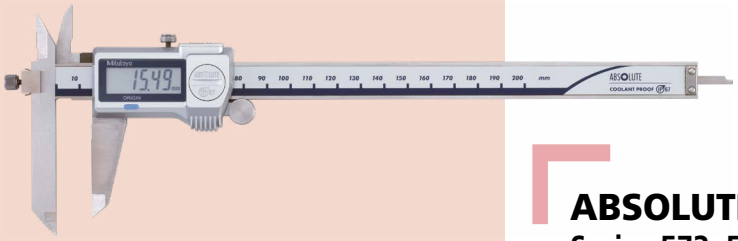

ABSOLUTE Digimatic Offset Caliper

Series 573, 536 - Specialty Caliper Models

Refer to page D-27 for details.

D

Calipers

INDEX

Calipers

ABSOLUTE Coolant Proof Caliper	D-3,4
ABSOLUTE Digimatic Caliper	D-5,6
ABSOLUTE Digimatic Long Caliper	D-7
Dial Caliper	D-8
Vernier Caliper (Standard Model)	D-9,10
Vernier Caliper with Fine Adjustment	D-11
Vernier Caliper with Thumb Grip	D-12
ABSOLUTE Coolant Proof Carbon Fiber Caliper with Standard Jaws	D-13
ABSOLUTE Coolant Proof Carbon Fiber Caliper with Ceramic Jaws	D-14,15
ABSOLUTE Coolant Proof Carbon Fiber Caliper with Long Jaws	D-16
ABSOLUTE Coolant Proof Carbon Fiber Caliper with Interchangeable Jaws	D-17
Optional accessories	D-18,19
ABSOLUTE Digimatic Caliper with Nib Style Jaws	D-20
ABSOLUTE Digimatic Caliper with Nib Style and Standard Jaws	D-21
Vernier Caliper with Nib Style and Standard Jaws	D-22
Vernier Caliper with Nib Style Jaws and Fine Adjustment	D-23,24
Long Jaw Vernier Caliper	D-25,26
Offset Caliper (ABSOLUTE Digimatic Type)	D-27
Offset Caliper (Vernier Type)	D-28
Offset Centerline Caliper (ABSOLUTE Digimatic Type)	D-29
Offset Centerline Caliper (Vernier Type)	D-30
ABSOLUTE Back-Jaw Centerline Caliper	D-31
Point Caliper	D-32
Blade Type Caliper	D-33,34
ABSOLUTE Inside Caliper (Knife-edge/Inside Groove/Point Jaw Type)	D-35,36,37,38
Neck Caliper	D-39
Tube Thickness Caliper	D-40
Hook Type Vernier Caliper	D-41
Swivel Vernier Caliper	D-41
ABSOLUTE Low Force Caliper	D-42
ABSOLUTE Snap Caliper	D-43
Scribing Caliper	D-44
Optional Accessories for Calipers	D-45

MeasurLink® ENABLED
Data Management Software by Mitutoyo

Measurement Data Network System

MeasurLink® is a measurement data management system based on databases (SQL Server). You can build a network to manage the measurement results and measuring instruments simply by combining the required functions.

MeasurLink® is a registered trademark of Mitutoyo Corporation in Japan and Mitutoyo America Corporation in the United States.

U-WAVE fit

Measurement Data Wireless Communication System

Bluetooth® communication enables wireless transfer of measurement data from Digimatic micrometers and callipers to PCs, smartphones, tablets and such other devices.

IP67

IP Codes

The code indicates the degree of protection against the ingress of foreign materials and water as defined in the IEC standard (IEC 60529). The number indicates the protection level.
(Refer to page 3)

Dust- and Water-Protected
TÜVRheinland CERTIFIED
www.tuv.com ID 0000040191

TÜV Rheinland Certification Marks

All products with the marks have passed the IP test carried out by the German accreditation organization, TÜV Rheinland.

Mitutoyo guarantees the product quality
PROPRIETARY INSPECTION CERTIFICATE

Measuring Instruments Shipped with Inspection Certificate

Mitutoyo guarantees product quality as a leading precision measuring instrument manufacturer and ships measuring instruments with an inspection certificate that includes inspection data so that customers can use them with confidence.

ABSOLUTE™

ABSOLUTE Linear Encoder

Mitutoyo developed the unique ABSOLUTE method to retain position information after the power is turned off.
The origin is set once - thereafter the live position is displayed when the power is turned on.

Mitutoyo

Calipers

ABSOLUTE Coolant Proof Caliper
SERIES 500 — with Dust/Water Protection Conforming to IP67 Level

- Rated to IP67: can be used in workshop conditions exposed to coolant, water, dust or oil. The digital display can reduce human error by preventing incorrect reading of measurement results.
- Incorporates the Mitutoyo ABSOLUTE measurement system. No need to reset the origin after switching on. Eliminates overspeed errors.
- Battery cap does not require a screw driver for battery replacement.
- SPC data output models can be integrated into statistical process control and measurement systems. (Refer to section A).
- Carbide-tipped jaw calipers are optimal for rough finished parts, castings, grindingstones, etc.

D

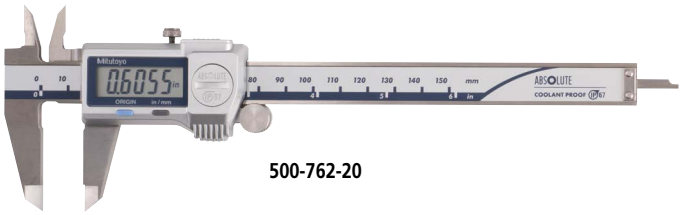

500-762-20

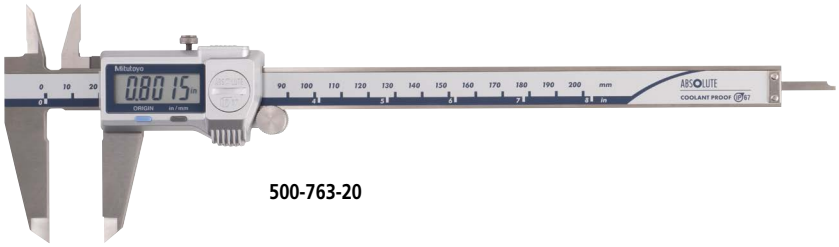

500-763-20

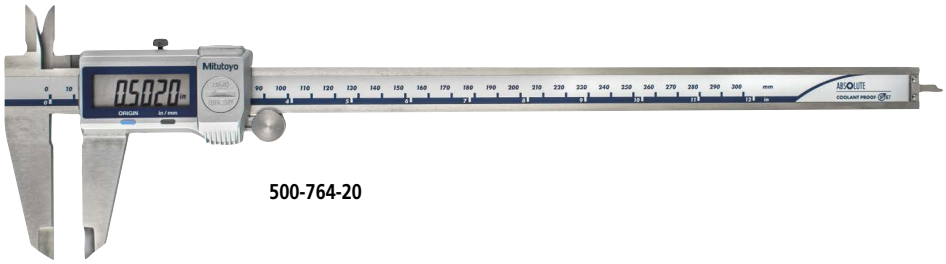

500-764-20

MeasurLink ENABLED
Data Management Software by Mitutoyo

U-WAVE fit

ABSOLUTE™

IP67

PROPRIETARY INSPECTION CERTIFICATE

TÜVRheinland CERTIFIED
Dust- and Water-Protected
www.tuv.com
ID 0000045042

Functions

- Origin-set: ABSOLUTE origin position can be changed.
- Data output: Models equipped with this function have an output port for transferring measurement data to a Statistical Process Control (SPC) system.
  Note: Excludes models without measurement output data port. See SPECIFICATIONS on page D-4.
- Automatic power on/off: Turns off the LCD display if the caliper remains unused for approximately 20 minutes after measurement, although the origin is still memorized. Moving the slider restores the display.
- Alarm: Should a computing error occur, the display shows an error message causing the measurement function to stop. This prevents an instrument from giving an erroneous reading. Also, when the battery voltage drops to a certain level, the "B" mark appears to indicate low battery voltage before the measurement becomes unavailable.

Optional Output Devices

Order No.	Description
Wired	
264-020	USB Input tool (**IT-020U**)
- 05CZA624	Connecting Cable (**1m**)
- 05CZA625	Connecting Cable (**2m**)
06AFM380A	USB Input Tool Direct (**2m**)
Wireless	
264-620	Transmitter (**IP67**)
264-624	Transmitter (**IP67, Bluetooth**)
264-621	Transmitter (**Buzzer**)
264-625	Transmitter (**Buzzer, Bluetooth**)
- 02AZF310	Connecting Unit (**Adapter**)
- 02AZE140A	Connecting Cable (**foot switch compatible**)

Note: Model uses connector type "A"

LCD

Remarkably easy-to-read display

IP67 protection level

SPECIFICATIONS

Inch / Metric

Order No.	Range	Resolution	Accuracy*	SPC Output	Thumb roller	Remarks
500-720-20	0 - 6 in/ 0 - 150 mm	0.0005 in/ 0.01 mm	±0.001 in/ ±0.02 mm	✓	—	Depth bar ø1.9mm
500-735-20					✓	Carbided-tipped Jaws for O.D.
500-737-20						Carbided-tipped Jaws for O.D. & I.D.
500-762-20						
500-769-20						Depth bar ø1.9mm
500-731-20				—		Carbided-tipped Jaws for O.D.
500-733-20						Carbided-tipped Jaws for O.D. & I.D.
500-752-20						
500-768-20						Depth bar ø1.9mm
500-736-20	0 - 8 in/ 0 - 200 mm			✓		Carbided-tipped Jaws for O.D.
500-738-20						Carbided-tipped Jaws for O.D. & I.D.
500-763-20						
500-732-20				—		Carbided-tipped Jaws for O.D.
500-734-20						Carbided-tipped Jaws for O.D. & I.D.
500-753-20						Depth bar ø1.9 mm
500-764-20	0 - 12 in/ 0 - 300 mm		±0.0015 in/ ±0.03 mm	✓	✓	
500-754-20				—		

Metric

Order No.	Range (mm)	Resolution (mm)	Accuracy (mm)*	SPC Output	Thumb roller	Remarks
500-712-20	0 - 150	0.01	±0.02	✓	✓	
500-719-20						Depth bar ø1.9mm
500-721-20						Carbided-tipped Jaws for O.D.
500-723-20						Carbided-tipped Jaws for O.D. & I.D.
500-727-20					—	Carbided-tipped Jaws for O.D. & I.D.
500-716-20						
500-702-20				—	✓	
500-706-20					—	
500-709-20						Depth bar ø1.9mm
500-717-20	0 - 200			✓		
500-713-20					✓	
500-722-20						Carbided-tipped Jaws for O.D.
500-724-20						Carbided-tipped Jaws for O.D. & I.D.
500-728-20					—	Carbided-tipped Jaws for O.D. & I.D.
500-703-20				—	✓	
500-707-20					—	
500-714-20	0 - 300		±0.03	✓	✓	
500-718-20					—	
500-704-20				—	✓	
500-708-20					—	

- Power source: SR44 battery (1 pc.), **938882** included as standard (for operational checks)
- Position detection method: ABSOLUTE electromagnetic induction linear encoder
- Battery life: Approx. 5 years under normal use
- Response speed: Unlimited

* E_{MPE} (ISO 13385-1:2019 and ASME B89.1.14-2018). Largest value across the measuring range. See page D-46 for MPE table.

DIMENSIONS

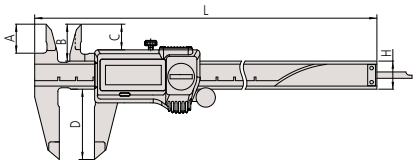

Unit: mm

Range (mm)	A	B	C	D	H	L
0 - 6 in / 150 mm	16.5	21	14.6	40	16	233
0 - 8 in / 200 mm	20	24.5	18.1	50		290
0 - 12 in / 300 mm	22	27.5	19.8	64	20	404

Outside jaw thickness = 3.5 mm for 0 to 150 mm/0 to 200 mm models
3.8 mm for 0 to 300 mm model

Find a Distributor

Calipers

MeasurLink ENABLED
Data Management Software by Mitutoyo

U-WAVE fit

ABSOLUTE™

PROPRIETARY INSPECTION CERTIFICATE

ABSOLUTE Digimatic Caliper
SERIES 500 — with Exclusive ABSOLUTE Encoder Technology

- This is a standard digital caliper. The digital display can reduce human error by preventing incorrect readings of measurement results.
- Incorporates the Mitutoyo ABSOLUTE measurement system. No need to reset the origin after switching on. Eliminates overspeed errors.
- Carbide-tipped jaw calipers are optimal for rough finished parts, castings, grinding stones, etc.
- SPC data output models can be integrated into statistical process control and measurement systems. (Refer to section A).

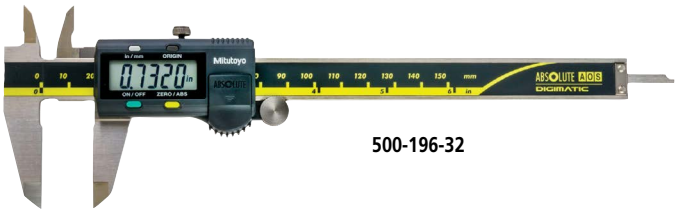

500-196-32

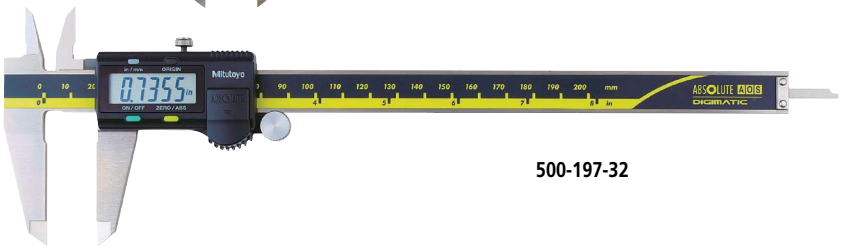

500-197-32

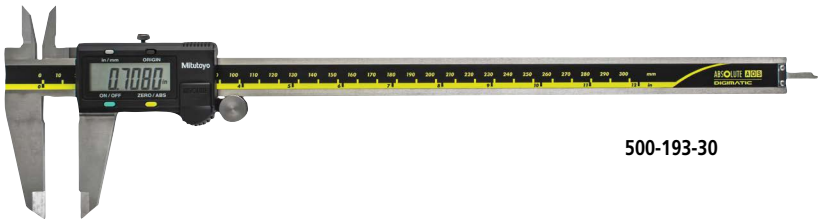

500-193-30

Functions

- ABSOLUTE measurement: after a data is displayed, next measurement can be performed without zero-setting. Also, the ABS origin point can be changed with ORIGIN switch.
- Incremental measurement: Sets the displayed value to zero (zero-setting) at any position, making comparative measurement easier.
- Low-voltage alert: notifies that the battery is worn with "B" mark before becoming immeasurable. Thus, the timing for battery replacement can be confirmed in advance.
- Data output: Models equipped with this function have an output port for transferring measurement data to a Statistical Process Control (SPC) system.
  Note: Excludes models without measurement output data port. See SPECIFICATIONS on page D-6.
- Data hold: With the optional hold unit, the function can hold the displayed value (cannot be used with the output function).

Optional Output Devices

Order No.	Description
Wired	
264-020	USB Input tool (**IT-020U**)
- 959149	Connecting Cable (**1m**)
- 959150	Connecting Cable (**2m**)
06AFM380C	USB Input Tool Direct (**2m**)
Wireless	
264-620	Transmitter (**IP67**)
264-624	Transmitter (**IP67, Bluetooth**)
264-621	Transmitter (**Buzzer**)
264-625	Transmitter (**Buzzer, Bluetooth**)
- 02AZF300	Connecting Unit (**Adapter**)
- 02AZE140C	Connecting Cable (**foot switch compatible**)

Note: Model uses connector type "C"

DIMENSIONS

Unit: mm

With thumb roller

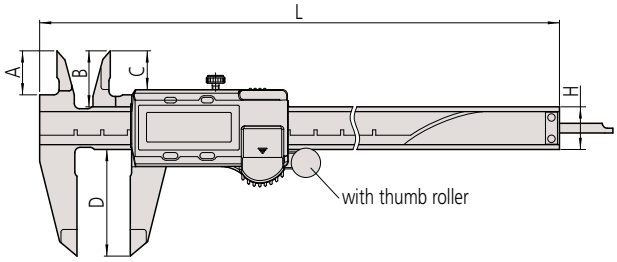

Without thumb roller

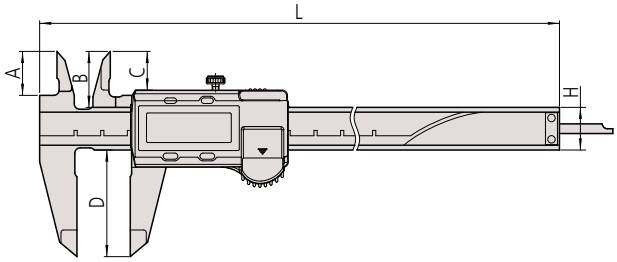

Range (mm)	A	B	C	D	H	L
0 - 100	16.5	21	14.5	40	16	182
0 - 150						233
0 - 200	20	24.5	18	50		290
0 - 300	22	27.5	19.8	64	20	404

Jaw thickness: 3.5 mm for 0 to 100 mm/0 to 150 mm/0 to 200 mm models and 3.8 mm for 0 to 300 mm model

ABSOLUTE Digimatic Caliper
SERIES 500 — with Exclusive ABSOLUTE Encoder Technology

• **Data hold unit**

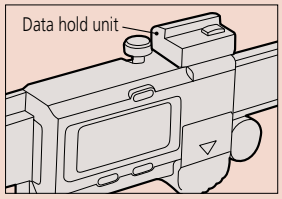

959143

Holds the value on the display when pressed

SPECIFICATIONS

Inch / Metric

Order No.	Range	Resolution	Accuracy*	SPC Output	Thumb roller	Remarks
500-170-32	0 - 4 in/ 0 - 100 mm	0.0005 in/ 0.01 mm	±0.001 in/ ±0.02 mm	✓	✓	Depth bar ø.075 in
500-195-32				—		Depth bar ø.075 in
500-171-32	0 - 6 in/ 0 - 150 mm			✓		
500-174-32						Carbided-tipped Jaws for O.D.
500-175-32						Carbided-tipped Jaws for O.D. & I.D.
500-178-32						Depth bar ø.075 in
500-196-32				—		
500-159-32						Carbided-tipped Jaws for O.D.
500-160-32						Carbided-tipped Jaws for O.D. & I.D.
500-202-32				✓		
500-172-32	0 - 8 in/ 0 - 200 mm				✓	
500-176-32						Carbided-tipped Jaws for O.D.
500-177-32						Carbided-tipped Jaws for O.D. & I.D.
500-197-32				—		
500-163-32						Carbided-tipped Jaws for O.D.
500-164-32						Carbided-tipped Jaws for O.D. & I.D.
500-173-32	0 - 12 in/ 0 - 300 mm		±0.0015 in/ ±0.03 mm		✓	
500-167-32						Carbided-tipped Jaws for O.D.
500-168-32						Carbided-tipped Jaws for O.D. & I.D.
500-193-32				—		
500-165-32						Carbided-tipped Jaws for O.D.
500-166-32						Carbided-tipped Jaws for O.D. & I.D.

Metric

Order No.	Range (mm)	Resolution (mm)	Accuracy (mm)*	SPC Output	Thumb roller	Remarks
500-180-32	0 - 100	0.01	±0.02	—	—	Depth bar ø1.9mm
500-150-32				✓	✓	Depth bar ø1.9mm
500-181-32	0 - 150			—		
500-184-32						Depth bar ø1.9mm
500-151-32				✓	✓	
500-154-32						Carbided-tipped Jaws for O.D.
500-155-32						Carbided-tipped Jaws for O.D. & I.D.
500-158-32						Depth bar ø1.9mm
500-161-32					—	
500-182-32	0 - 200			—		
500-152-32				✓	✓	
500-156-32						Carbided-tipped Jaws for O.D.
500-157-32						Carbided-tipped Jaws for O.D. & I.D.
500-153-32	0 - 300		±0.03		✓	
500-205-32					—	
500-188-32					✓	Carbided-tipped Jaws for O.D.
500-189-32						Carbided-tipped Jaws for O.D. & I.D.

• Power source: SR44 battery (1 pc.), **938882** included as standard (for operational checks)
• Battery life: Approx. 5 years under normal use
* E_{MPE} (ISO 13385-1:2019 and ASME B89.1.14-2018). Largest value across the measuring range. See page D-46 for MPE table.

Got Questions?

Calipers

MeasurLink ENABLED
Data Management Software by Mitutoyo
ABSOLUTE™

ABSOLUTE Digimatic Long Range Caliper SERIES 500 — with Exclusive ABSOLUTE Encoder Technology

- This is a long-scale digital caliper. The digital display can reduce human error by preventing incorrect reading of measurement results.
- Incorporates the Mitutoyo ABSOLUTE measurement system. No need to reset the origin after switching on. Eliminates overspeed errors.
- Data output function allows integration into statistical process control and measurement systems. (Refer to section A).

500-505-10

D

Optional Output Devices

Order No.	Description
Wired	
264-020	USB Input tool (**IT-020U**)
- 959149	Connecting Cable (**1m**)
- 959150	Connecting Cable (**2m**)
06AFM380C	USB Input Tool Direct (**2m**)
Wireless	
264-620	Transmitter (**IP67**)
264-624	Transmitter (**IP67, Bluetooth**)
264-621	Transmitter (**Buzzer**)
264-625	Transmitter (**Buzzer, Bluetooth**)
- 02AZD790C	Connecting Cable
- 02AZE140C	Connecting Cable (**foot switch compatible**)

Note: Model uses connector type "C"

- **Data hold unit**

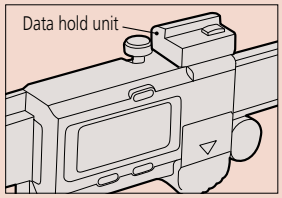

959143

Holds the value on the display when pressed

SPECIFICATIONS

Inch / Metric

Order No.	Range	Resolution	Accuracy*	Mass (g)
500-505-10	0 - 18 in/0 - 450 mm	0.0005 in/0.01 mm	±0.002 in/±0.05 mm	1170
500-506-10	0 - 24 in/0 - 600 mm			1350
500-507-10	0 - 40 in/0 - 1000 mm		±0.003 in/±0.07 mm	3300

Metric

Order No.	Range (mm)	Resolution (mm)	Accuracy (mm)*	Mass (g)
500-500-10	0 - 450	0.01	±0.05	1170
500-501-10	0 - 600			1350
500-502-10	0 - 1000		±0.07	3300

- Power source: SR44 battery (1 pc.), **938882** included as standard (for operational checks)
- Battery life: Approx. 3.5 years under normal use

* E_{MPE} (ISO 13385-1:2019 and ASME B89.1.14-2018). Largest value across the measuring range. See page D-46 for MPE table.

DIMENSIONS

Unit: mm

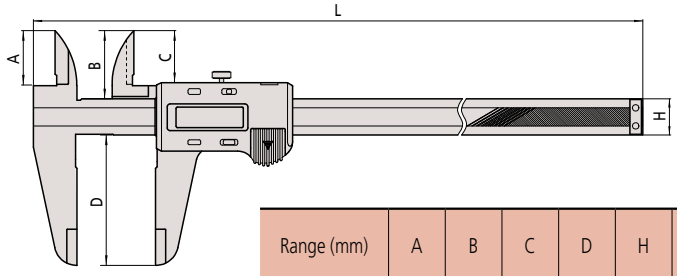

Range (mm)	A	B	C	D	H	L	Outside jaw width
0 - 450	38	47	35.9	90	25	630	6
0 - 600						780	
0 - 1000	50	60	49.8	130	32	1240	8

Talk to Sales

.100″ per revolution

.200″ per revolution

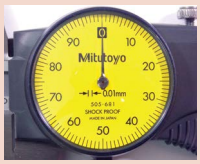
1mm per revolution

2mm per revolution

Reading

(A) Main scale reading 20. mm
(B) Dial reading 0.00 mm
20.00 mm

The series provides two types: Graduation 0.02 mm (2 mm/rev.) and Graduation 0.01 mm (1 mm/rev.).

Dial Caliper SERIES 505

- Can measure OD, ID, depth and steps.
- Easy-to-read font on dial and main scale.
- Improved finish on sliding surfaces for longevity.
- Thumb roller for smoother measurements.
- Lock screws for dial bezel and slider lock.
- Carbide-tipped models available.
- Supplied in a fitted plastic case.

505-742J

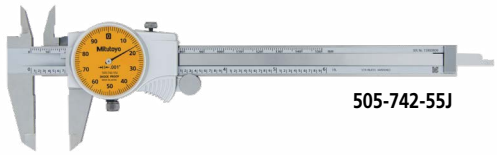
505-742-55J

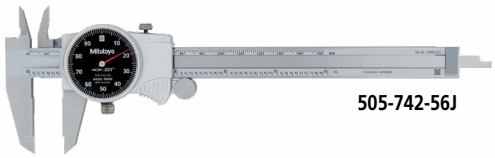
505-742-56J

D

SPECIFICATIONS

Inch

Order No.	Range (in)	Graduation (in)	Accuracy (in)*	Remarks
505-742J*1	0 - 6	0.001, 0.1/rev	±0.001	—
505-742-51J				Blue Dial Face
505-742-52J				Purple Dial Face
505-742-53J				Green Dial Face
505-742-54J				Red Dial Face
505-742-55J				Orange Dial Face
505-742-56J				Black Dial Face
505-736*1				Carbide-tipped jaws for outside measurement
505-738*1				Carbide-tipped jaws for outside and inside measurement
505-740J		0.001, 0.2/rev		—
505-744				Carbide-tipped jaws for outside measurement
505-741J	0 - 8	0.001, 0.2/rev	±0.002	—
505-743J*1		0.001, 0.1/rev		
505-737*1		0.001, 0.2/rev		Carbide-tipped jaws for outside measurement
505-739*1				Carbide-tipped jaws for outside and inside measurement
505-749	0 - 12			—
505-746*1		0.001, 0.1/rev		
505-750		0.001, 0.2/rev		Carbide-tipped jaws for outside measurement
505-747*1		0.001, 0.1/rev		
505-748*1				Carbide-tipped jaws for outside and inside measurement

Metric

Order No.	Range (mm)	Graduation (mm)	Accuracy (mm)*	Remarks
505-730	0 - 150	0.02, 2/rev	±0.03	—
505-734				Carbide-tipped jaws for outside measurement
505-735				Carbide-tipped jaws for outside and inside measurement
505-732*1		0.01, 1/rev	±0.02	—
505-733*1	0 - 200		±0.03	
505-731		0.02, 2/rev		
505-745	0 - 300		±0.04	

* E_{MPE} (ISO 13385-1:2019 and ASME B89.1.14-2018). Largest value across the measuring range. See page D-46 for MPE table.
*1 Silver cover type

DIMENSIONS

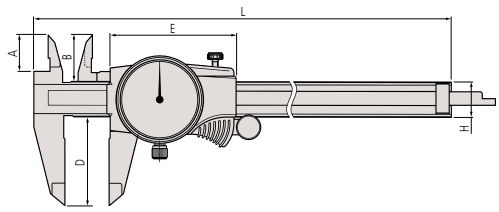

Unit: mm

Range (mm)	A	B	D	E	H	L
0 - 150	16.5	21	40	57.2	16	231
0 - 200	20	24.5	50			288
0 - 300	22	27.5	64	70.2	20	404

Outside jaw thickness: 3.5 mm
(**505-745**: 3.8 mm)

Calipers

Vernier Caliper
SERIES 530 — Standard Model

- This is a standard analog caliper. It can measure the outside, inside, depth, and step.
- The small Vernier face angle (14°) provides easy reading.
- Carbide-tipped jaw calipers are optimal for rough finished parts, castings, grinding stones, etc.

530-105

D

Measurement Example

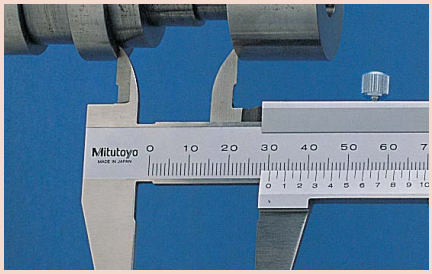

Round Depth Bar Type

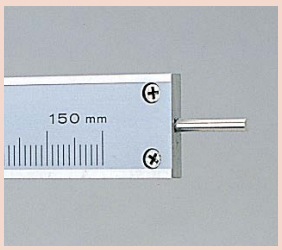

530-102

Carbide-Tipped Jaws for Outside Measurement

530-320

SPECIFICATIONS

Inch — with inch/inch double scale

Order No.	Range (in)	Graduation (in)	Accuracy (in)	Depth bar	Remarks
530-105	0 - 6	0.001 (1/128)	±0.001 (±0.5/128)	Blade	—
530-116	0 - 8				

Metric/Inch — with metric/inch double scale

Order No.	Range	Graduation	Accuracy	Depth bar	Remarks
530-104	0 - 150 mm/ 0 - 6 in	0.05 mm (1/128 in)	±0.05 mm/ ±0.5/128 in	Blade	—
530-316					Clamping screw below the slider
530-312		0.02 mm (0.001 in)	±0.03 mm/ ±0.001 in		High accuracy model
530-114	0 - 200 mm/ 0 - 8 in	0.05 mm (1/128 in)	±0.05 mm/ ±0.5/128 in		—
530-118		0.02 mm (0.001 in)	±0.03 mm/ ±0.001 in		High accuracy model
530-115	0 - 300 mm/ 0 - 12 in	0.05 mm (1/128 in)	±0.08 mm/ ±0.5/128 in		—
530-119		0.02 mm (0.001 in)	±0.04 mm/ ±0.0015 in		High accuracy model

Metric

Order No.	Range (mm)	Graduation (mm)	Accuracy (mm)*	Depth bar	Remarks
530-100	0 - 100	0.05	±0.05	ø1.9 mm rod	—
530-122	0 - 150	0.02	±0.03	Blade	High accuracy model
530-101		0.05	±0.05		—
530-320					Carbide-tipped jaws for outside measurement
530-335					Carbide-tipped jaws for outside and inside measurement
530-102				ø1.9 mm rod	—
530-123	0 - 200	0.02	±0.03	Blade	High accuracy model
530-108		0.05	±0.05		—
530-321					Carbide-tipped jaws for outside measurement
530-124	0 - 300	0.02	±0.04		High accuracy model
530-109		0.05	±0.08		—
530-322					Carbide-tipped jaws for outside measurement
530-501	0 - 600		±0.10	—	—
530-502	0 - 1000		±0.15		

* E_{MPE} (ISO 13385-1:2019 and ASME B89.1.14-2018). Largest value across the measuring range. See page D-46 for MPE table.

Need Repair?

Vernier Caliper
SERIES 530 — Standard Model

DIMENSIONS

Unit: mm

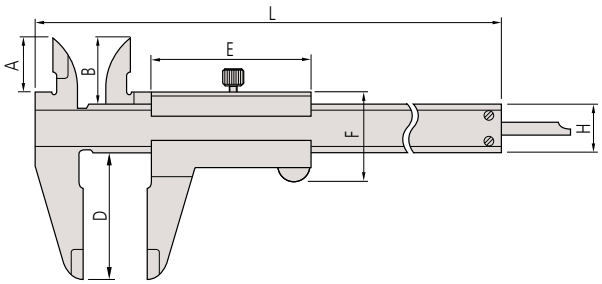

Range (mm)	A	B	D	E	F	H	L	Outside jaw thickness
0 - 100	17	21.5	40	53.5	30	16	182	3
0 - 150							229	
0 - 200	20.5	25	50				288	
0 - 300	22	27.5	64	66.5	36	20	404	3.8
0 - 600	38	47	90	89	50	25	780	6
0 - 1000	50	60	130	111	61	32	1240	8

Note: **530-100** and **530-102** incorporate a round depth bar (ø1.9 mm).
The depth bar shown in the illustration above is a different type.

Calipers

Vernier Caliper
SERIES 532 — with Fine Adjustment

- Fine-adjustment thumbwheel aids slider positioning.

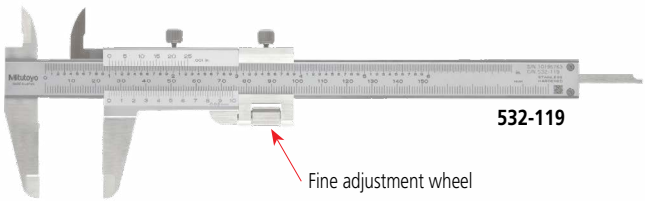

D

SPECIFICATIONS

Metric/Inch with metric/inch double scale

Order No.	Range	Graduation	Accurcay*	Depth bar	Remarks
532-119	0 - 130 mm/0 - 5 in	0.02 mm (0.001 in)	±0.03 mm/0.001 in	Blade	with fine adjustment
532-120	0 - 180 mm/0 - 7 in				
532-121	0 - 280 mm/0 - 11 in		±0.04 mm/0.0015 in		

Metric

Order No.	Range (mm)	Graduation (mm)	Accuracy (mm)*	Depth bar	Remarks
532-101	0 - 130	0.02	±0.03	Blade	with fine adjustment
532-102	0 - 180				
532-103	0 - 280		±0.04		

* E_{MPE} (ISO 13385-1:2019 and ASME B89.1.14-2018). Largest value across the measuring range. See page D-46 for MPE table.

DIMENSIONS

Unit: mm

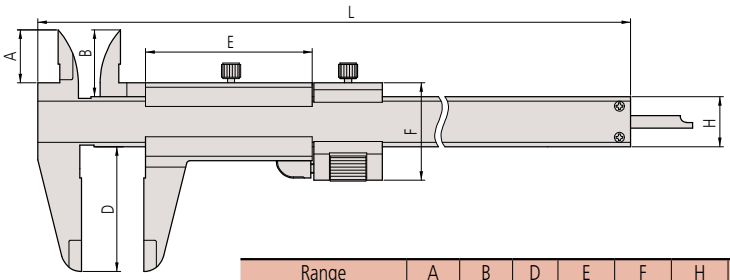

Range	A	B	D	E	F	H	L
0 - 130 mm/0 - 5 in	17	21.5	40	53.5	31.2	16	229
0 - 180 mm/0 - 7 in	20.5	25	50				288
0 - 280 mm/0 - 11 in	22	27.5	64	66.5	38	20	404

Jaw thickness: 3 mm for 0 to 130 mm/0 to 5 inch and 0 to 180 mm/0 to 7 inch models
3.8 mm for 0 to 280 mm/0 to 11 inch model

Where to Buy

Vernier Caliper
SERIES 531 — with Thumb Grip

- The slider position is fixed by an automatic clamp, and the measured value can be kept after a workpiece is removed.
- This feature is helpful when measuring at an invisible point of a workpiece or reading a value without a workpiece.

531-122

SPECIFICATIONS

Metric/Inch with metric/inch double scale

Order No.	Range	Graduation	Accuracy*	Depth bar	Remarks
531-122	0 - 150 mm/0 - 6 in	0.05 mm (1/128 in)	±0.05 mm/±0.5/128 in	Blade	with inch/mm conversion label
531-128		0.02 mm (0.001 in)	±0.03 mm/0.001 in		High accuracy model
531-108	0 - 200 mm/0 - 8 in	0.05 mm (1/128 in)	±0.05 mm/±0.5/128 in		—
531-129		0.02 mm (0.001 in)	±0.03 mm/0.001 in		High accuracy model
531-109	0 - 300 mm/0 - 12 in	0.05 mm (1/128 in)	±0.08 mm/±0.5/128 in		—
531-112		0.02 mm (0.001 in)	±0.04 mm/0.0015 in		High accuracy model

Metric

Order No.	Range (mm)	Graduation (mm)	Accuracy (mm)*	Depth bar	Remarks
531-101	0 - 150	0.05	±0.05	Blade	—
531-102	0 - 200				
531-103	0 - 300		±0.08		

* E_{MPE} (ISO 13385-1:2019 and ASME B89.1.14-2018). Largest value across the measuring range. See page D-46 for MPE table.

DIMENSIONS

Unit: mm

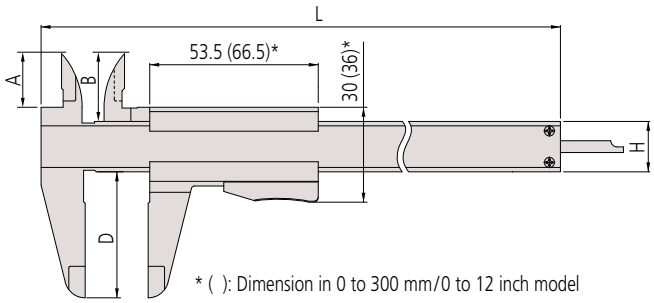

* ( ): Dimension in 0 to 300 mm/0 to 12 inch model

Range	A	B	D	H	L
0 - 150 mm/0 - 6 in	17	21.5	40	16	229
0 - 200 mm/0 - 8 in	20.5	25	50		288
0 - 300 mm/0 - 12 in	22	27.5	64	20	404

Jaw thickness: 3 mm for 0 to 150 mm/0 to 6 inch and 0 to 200 mm/0 to 8 inch models
3.8 mm for 0 to 300 mm/0 to 12 inch model

Calipers

MeasurLink ENABLED
Data Management Software by Mitutoyo

ABSOLUTE™

IP66

TÜVRheinland CERTIFIED — Dust- and Water-Protected — www.tuv.com ID 0000022582

ABSOLUTE Coolant Proof Carbon Fiber Caliper SERIES 552 — with Standard Jaws

- Rated to IP66: can be used in adverse environments where the caliper is subject to splashing by cutting fluid or coolant. The digital display can reduce human error by preventing incorrect reading of measurement results.
- Digimatic Calipers employ CFRP (Carbon-Fiber Reinforced Plastics) in the beam and jaws. Lightweight and easy to handle.

552-312-10

D

SPECIFICATIONS

Inch / Metric

Order No.	Range*1	Resolution	Accuracy*
552-312-10	0 - 18 in/0 - 450 mm (0.504 - 18.5 in/12.8 - 462.7mm)	0.0005 in/0.01 mm	±0.002 in/±0.04 mm
552-313-10	0 - 24 in/0 - 600 mm (0.504 - 24.5 in/12.8 - 612.7 mm)		
552-314-10	0 - 40 in/0 - 1000 mm (1.004 - 41 in/25.5 - 1025.4 mm)		±0.002 in/±0.05 mm
552-315-10	0 - 60 in/0 - 1500 mm (1.004 - 61 in/25.5 - 1525.4 mm)		±0.004 in/±0.09 mm
552-316-10	0 - 80 in/0 - 2000 mm (1.004 - 81 in/25.5 - 2025.4 mm)		±0.005 in/±0.12 mm

Metric

Order No.	Range (mm)*1	Resolution (mm)	Accuracy (mm)*
552-302-10	0 - 450 (20.1 - 470)	0.01	±0.04
552-303-10	0 - 600 (20.1 - 620)		
552-304-10	0 - 1000 (20.1 - 1020)		±0.05
552-305-10	0 - 1500 (20.1 - 1520)		±0.09
552-306-10	0 - 2000 (20.1 - 2020)		±0.12

- Power source: SR44 battery (1 pc.), **938882** included as standard (for operational checks)
- Battery life: Approx. 5,000 hours in continuous use

* E_{MPE} (ISO 13385-1:2019 and ASME B89.1.14-2018). Largest value across the measuring range. See page D-46 for MPE table.
*1 ( ): Dimension in inside measurement

Functions

- Zero-setting
- Data hold: Pressing the HOLD switch displays "H" on the LCD display and holds (retains) the display of value. Moving the slider in this state does not change the displayed value. Pressing the switch again cancels the state, allowing you to start measurement again.
- Offsetting: Pressing the OFFSET switch adds an offset for inside measurement to the displayed value so that you can directly obtain an inside measurement value.
- Presetting: This function presets a desired value as the displayed value at the origin. When using optional jaws, presetting an offset of the jaws enables you to directly obtain the necessary measurement value.
- Data output: Measurement data can be output, allowing easy incorporation of this instrument into a statistical process control or measurement system.
- Low-power and low-voltage alert: When the battery voltage becomes low, "B" appears on the LCD, signalling the need for battery replacement before the calliper stops working.
- Counting value composition error: If a measurement error occurs due to dirt on the scale, etc., an error message appears on the display and measurement stops.
- Automatic power on/off, inch/mm reading (inch/mm models): LCD display turns off after 20 minutes inactivity but the ABS scale unit origin is stored. Moving the slider restores the display.

DIMENSIONS

Unit: mm

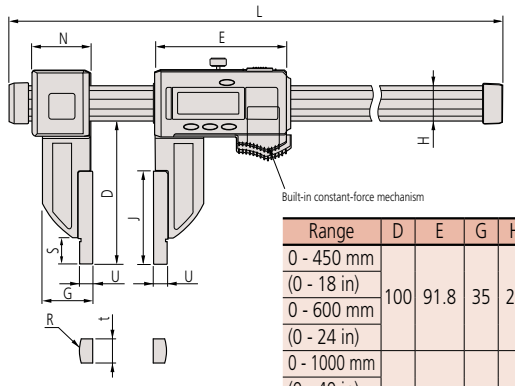

Range	D	E	G	H	J	L	N	R	S	t	U
0 - 450 mm	100	91.8	35	25	65	640	41.2	R10	18	8	10
(0 - 18 in)											(0.25 in)
0 - 600 mm						790					10
(0 - 24 in)											(0.25 in)
0 - 1000 mm	150	113.8	45	32	100	1230	62.8		24		10
(0 - 40 in)											(0.5 in)
0 - 1500 mm						1740					10
(0 - 60 in)											(0.5 in)
0 - 2000 mm						2250					10
(0 - 80 in)											(0.5 in)

Optional Output Devices

Order No.	Description
Wired	
264-020	USB Input tool (**IT-020U**)
- 05CZA624	Connecting Cable (**1m**)
- 05CZA625	Connecting Cable (**2m**)
06AFM380A	USB Input Tool Direct (**2m**)
Wireless	
264-620	Transmitter (**IP67**)
264-624	Transmitter (**IP67, Bluetooth**)
264-621	Transmitter (**Buzzer**)
264-625	Transmitter (**Buzzer, Bluetooth**)
- 02AZD790A	Connecting Cable
- 02AZE140A	Connecting Cable (**foot switch compatible**)

Note: Model uses connector type "A"

MeasurLink ENABLED
Data Management Software by Mitutoyo

ABSOLUTE™

IP66

TÜVRheinland CERTIFIED
Dust- and Water-Protected
www.tuv.com ID 0000022582

ABSOLUTE Coolant Proof Carbon Fiber Caliper SERIES 552 — with Ceramic Jaws

- Digimatic Calipers employ CFRP (Carbon-Fiber Reinforced Plastics) in the beam and jaws. Lightweight and easy to handle.
- Rated to IP66: can be used in adverse environments where the caliper is subject to splashing by cutting fluid or coolant. The digital display can reduce human error by preventing incorrect reading of measurement results.
- Benefits of Zirconia Ceramic
  - Extremely high wear resistance, 3x better than carbide.
  - Corrosion proof – no oil needed.
  - Closest expansion coefficient to steel.
  - Anti-magnetic – keeps away steel dust.

552-165-10

D

Functions

- Zero-setting
- Data hold: Pressing the HOLD switch displays "H" on the LCD display and holds (retains) the display of value. Moving the slider in this state does not change the displayed value. Pressing the switch again cancels the state, allowing you to start measurement again.
- Offsetting: Pressing the OFFSET switch adds an offset for inside measurement to the displayed value so that you can directly obtain an inside measurement value.
- Presetting: This function presets a desired value as the displayed value at the origin. When using optional jaws, presetting an offset of the jaws enables you to directly obtain the necessary measurement value.
- Data output: Measurement data can be output, allowing easy incorporation of this instrument into a statistical process control or measurement system.
- Low-power and low-voltage alert: When the battery voltage becomes low, "B" appears on the LCD, signalling the need for battery replacement before the calliper stops working.
- Counting value composition error: If a measurement error occurs due to dirt on the scale, etc., an error message appears on the display and measurement stops.
- Automatic power on/off, inch/mm reading (inch/mm models): LCD display turns off after 20 minutes inactivity but the ABS scale unit origin is stored. Moving the slider restores the display.

Optional Output Devices

Order No.	Description
Wired	
264-020	USB Input tool (**IT-020U**)
- 05CZA624	Connecting Cable (**1m**)
- 05CZA625	Connecting Cable (**2m**)
06AFM380A	USB Input Tool Direct (**2m**)
Wireless	
264-620	Transmitter (**IP67**)
264-624	Transmitter (**IP67, Bluetooth**)
264-621	Transmitter (**Buzzer**)
264-625	Transmitter (**Buzzer, Bluetooth**)
- 02AZD790A	Connecting Cable
- 02AZE140A	Connecting Cable (**foot switch compatible**)

Note: Model uses connector type "A"

SPECIFICATIONS

Inch / Metric

Order No.	Range*1	Resolution	Accuracy*
552-165-10	0 - 18 in/0 - 450 mm (0.504 - 18.5 in/12.8 - 462.7 mm)	0.0005 in/0.01 mm	±0.002 in/±0.04 mm
552-166-10	0 - 24 in/0 - 600 mm (0.504 - 24.5 in/12.8 - 612.7 mm)		

Metric

Order No.	Range (mm)*1	Resolution (mm)	Accuracy (mm)*
552-155-10	0 - 450 (20.1 - 470)	0.01	±0.04
552-156-10	0 - 600 (20.1 - 620)		±0.04

- Power source: SR44 battery (1 pc.), **938882** included as standard (for operational checks)
- Battery life: Approx. 5,000 hours in continuous use

* E_{MPE} (ISO 13385-1:2019 and ASME B89.1.14-2018). Largest value across the measuring range. See page D-46 for MPE table.

*1 ( ): Dimension in inside measurement

DIMENSIONS

Unit: mm

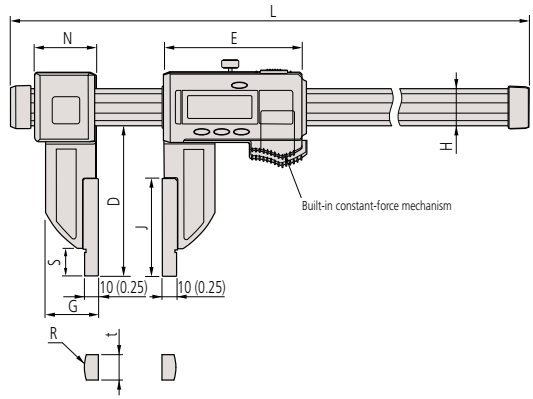

Range	D	E	G	H	J	L	N	R	S	t
0 - 450 mm (0 - 18 in)	100	91.8	35	25	65	640	41.2	R10	18	8
0 - 600 mm (0 - 24 in)						790				

( ): Inch/Metric type

Mitutoyo

Calipers

Measurement Example

D

Optional Accessories (Not compatible w/ Long Jaw Type)

Inch / Metric

	18" & 24" models	40" - 80" models
Clamp box (1 pair)	914053	914054
Distance measurement jaw (1 pair)	914056	
Point ID measurement jaw (1 pair)	914058	

Metric

	450mm & 600mm models	1000mm - 2000mm models
Clamp box (1 pair)	914053	914054
Distance measurement jaw (1 pair)	914055	
Point ID measurement jaw (1 pair)	914057	

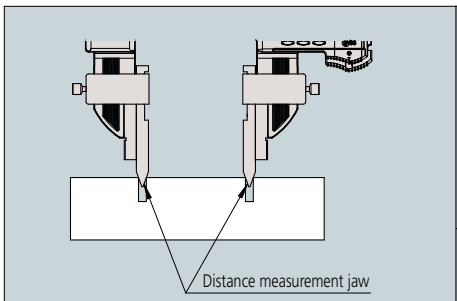

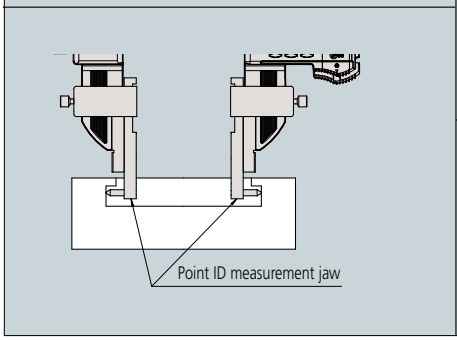

Clamp box

Distance measurement jaw
Accuracy: ±0.03 mm*

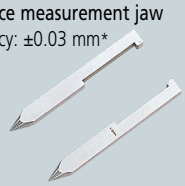

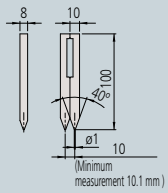

Point ID measurement jaw
Accuracy: ±0.02 mm*

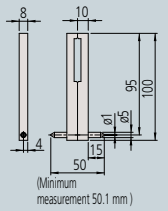

* Accuracies shown in the diagrams are of each accessory, and accuracy resulting in mounting them on the main body is not guaranteed.

Get a Quote

MeasurLink® ENABLED
Data Management Software by Mitutoyo

ABSOLUTE™

IP66

TÜVRheinland CERTIFIED
Dust- and Water-Protected
www.tuv.com ID 0000022582

Measurement example

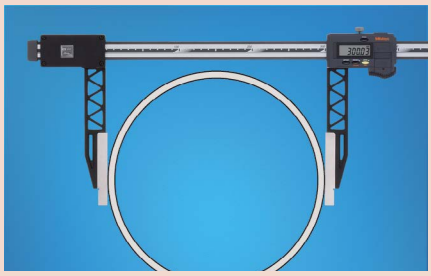

Functions

- Zero-setting
- Data hold: Pressing the HOLD switch displays "H" on the LCD display and holds (retains) the display of value. Moving the slider in this state does not change the displayed value. Pressing the switch again cancels the state, allowing you to start measurement again.
- Offsetting: Pressing the OFFSET switch adds an offset for inside measurement to the displayed value so that you can directly obtain an inside measurement value.
- Presetting: This function presets a desired value as the displayed value at the origin. When using optional jaws, presetting an offset of the jaws enables you to directly obtain the necessary measurement value.
- Data output: Measurement data can be output, allowing easy incorporation of this instrument into a statistical process control or measurement system.
- Low-power and low-voltage alert: When the battery voltage becomes low, "B" appears on the LCD, signalling the need for battery replacement before the calliper stops working.
- Counting value composition error: If a measurement error occurs due to dirt on the scale, etc., an error message appears on the display and measurement stops.
- Automatic power on/off, inch/mm reading (inch/mm models): LCD display turns off after 20 minutes inactivity but the ABS scale unit origin is stored. Moving the slider restores the display.

Optional Output Devices

Order No.	Description
Wired	
264-020	USB Input tool (**IT-020U**)
- 05CZA624	Connecting Cable (**1m**)
- 05CZA625	Connecting Cable (**2m**)
06AFM380A	USB Input Tool Direct (**2m**)
Wireless	
264-620	Transmitter (**IP67**)
264-624	Transmitter (**IP67, Bluetooth**)
264-621	Transmitter (**Buzzer**)
264-625	Transmitter (**Buzzer, Bluetooth**)
- 02AZD790A	Connecting Cable
- 02AZE140A	Connecting Cable (**foot switch compatible**)

Note: Model uses connector type "A"

ABSOLUTE Coolant Proof Carbon Fiber Caliper SERIES 552 — with Long Jaws

- Digimatic Calipers employ CFRP (Carbon-Fiber Reinforced Plastics) in the beam and jaws. Lightweight and easy to handle. The long jaw is suitable for measuring a large pipe diameter, etc.
- Rated to IP66: can be used in adverse environments where the caliper is subject to splashing by cutting fluid or coolant. The digital display can reduce human error by preventing incorrect reading of measurement results.

552-160-10

SPECIFICATIONS

Inch / Metric

Order No.	Range*1	Resolution	Accuracy*
552-160-10	0 - 18 in/0 - 450 mm (0.504 - 18.5 in/12.8 - 462.7 mm)	0.0005 in/0.01 mm	±0.0025 in/±0.06 mm
552-161-10	0 - 24 in/0 - 600 mm (0.504 - 24.5 in/12.8 - 612.7 mm)		
552-162-10	0 - 40 in/0 - 1000 mm (1.004 - 41 in/25.5 - 1025.4 mm)		±0.003 in/±0.07 mm
552-163-10	0 - 60 in/0 - 1500 mm (1.004 - 61 in/25.5 - 1525.4 mm)		±0.0045 in/±0.11 mm
552-164-10	0 - 80 in/0 - 2000 mm (1.004 - 81 in/25.5 - 2025.4 mm)		±0.0055 in/±0.14 mm

Metric

Order No.	Range (mm)*1	Resolution (mm)	Accuracy (mm)*
552-150-10	0 - 450 (20.1 - 470)	0.01	±0.06
552-151-10	0 - 600 (20.1 - 620)		
552-152-10	0 - 1000 (20.1 - 1020)		±0.07
552-153-10	0 - 1500 (20.1 - 1520)		±0.11
552-154-10	0 - 2000 (20.1 - 2020)		±0.14

- Power source: SR44 battery (1 pc.), **938882** included as standard (for operational checks)
- Battery life: Approx. 5,000 hours in continuous use

* E_{MPE} (ISO 13385-1:2019 and ASME B89.1.14-2018). Largest value across the measuring range. See page D-46 for MPE table.

*1 ( ): Dimension in inside measurement

DIMENSIONS

Unit: mm

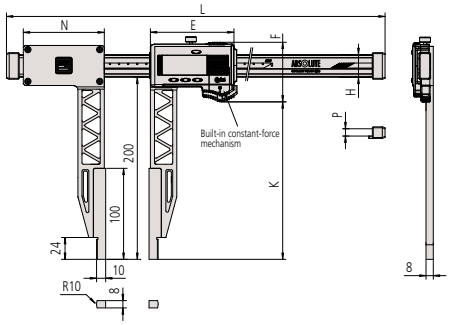

Range	E	F	H	K	L	N	P
0 - 450 mm	91.8	65.5	25	173	680	89	8
0 - 600 mm					830		
0 - 1000 mm	113.8	73	32	170.5	1280	110	12
0 - 1500 mm					1790		
0 - 2000 mm					2300		

D

Mitutoyo

Calipers

ABSOLUTE Coolant Proof Carbon Fiber Caliper SERIES 552 — with Interchangeable Jaws

- Digimatic Calipers employ CFRP (Carbon-Fiber Reinforced Plastics) in the beam and jaws. Lightweight and easy to handle. The range of applications can be expanded by using interchangeable jaws.
- Rated to IP66: can be used in adverse environments where the caliper is subject to splashing by cutting fluid or coolant. The digital display can reduce human error by preventing incorrect reading of measurement results.

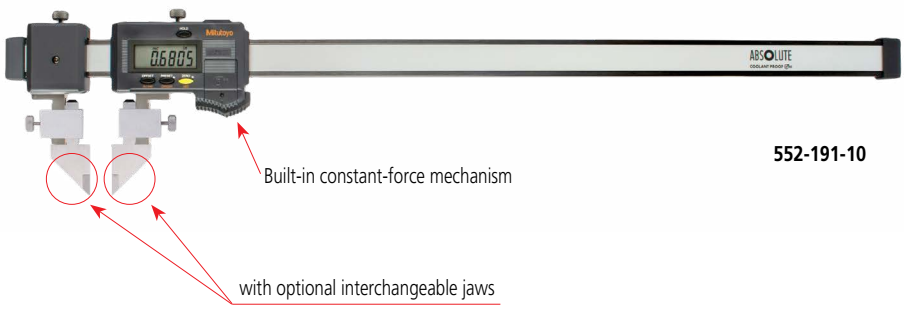

552-191-10

D

SPECIFICATIONS

Inch / Metric

Order No.	Range	Resolution	Accuracy*
552-191-10	0 - 18 in/0 - 450 mm	0.0005 in/0.01 mm	Accuracies will vary depending on jaws attached. See D-18.
552-192-10	0 - 24 in/0 - 600 mm		
552-193-10	0 - 40 in/0 - 1000 mm		
552-194-10	0 - 60 in/0 - 1500 mm		
552-195-10	0 - 80 in/0 - 2000 mm		

Metric

Order No.	Range (mm)	Resolution (mm)	Accuracy (mm)*
552-181-10	0 - 450	0.01	Accuracies will vary depending on jaws attached. See D-18.
552-182-10	0 - 600		
552-183-10	0 - 1000		
552-184-10	0 - 1500		
552-185-10	0 - 2000		

- Power source: SR44 battery (1 pc.), **938882** included as standard (for operational checks)
- Battery life: Approx. 5,000 hours in continuous use

* E_{MPE} (ISO 13385-1:2019 and ASME B89.1.14-2018). Largest value across the measuring range. See page D-46 for MPE table.

MeasurLink ENABLED Data Management Software by Mitutoyo

ABSOLUTE™

IP66

Dust- and Water-Protected TÜVRheinland CERTIFIED www.tuv.com ID 0000022582

Functions

- Zero-setting
- Data hold: Pressing the HOLD switch displays "H" on the LCD display and holds (retains) the display of value. Moving the slider in this state does not change the displayed value. Pressing the switch again cancels the state, allowing you to start measurement again.
- Offsetting: Pressing the OFFSET switch adds an offset for inside measurement to the displayed value so that you can directly obtain an inside measurement value.
- Presetting: This function presets a desired value as the displayed value at the origin. When using optional jaws, presetting an offset of the jaws enables you to directly obtain the necessary measurement value.
- Data output: Measurement data can be output, allowing easy incorporation of this instrument into a statistical process control or measurement system.
- Low-power and low-voltage alert: When the battery voltage becomes low, "B" appears on the LCD, signalling the need for battery replacement before the calliper stops working.
- Counting value composition error: If a measurement error occurs due to dirt on the scale, etc., an error message appears on the display and measurement stops.
- Automatic power on/off, inch/mm reading (inch/mm models): LCD display turns off after 20 minutes inactivity but the ABS scale unit origin is stored. Moving the slider restores the display.

Standard Accessories (2 pcs.)

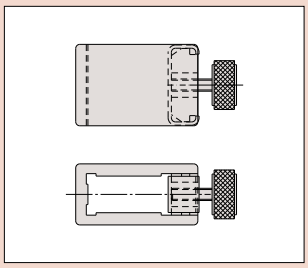

Jaw clamps: 05GZA033

Optional Output Devices

Order No.	Description
Wired	
264-020	USB Input tool (**IT-020U**)
- 05CZA624	Connecting Cable (**1m**)
- 05CZA625	Connecting Cable (**2m**)
06AFM380A	USB Input Tool Direct (**2m**)
Wireless	
264-620	Transmitter (**IP67**)
264-624	Transmitter (**IP67, Bluetooth**)
264-621	Transmitter (**Buzzer**)
264-625	Transmitter (**Buzzer, Bluetooth**)
- 02AZD790A	Connecting Cable
- 02AZE140A	Connecting Cable (**foot switch compatible**)

Note: Model uses connector type "A"

Optional Accessories

Interchangeable jaws

SPECIFICATIONS

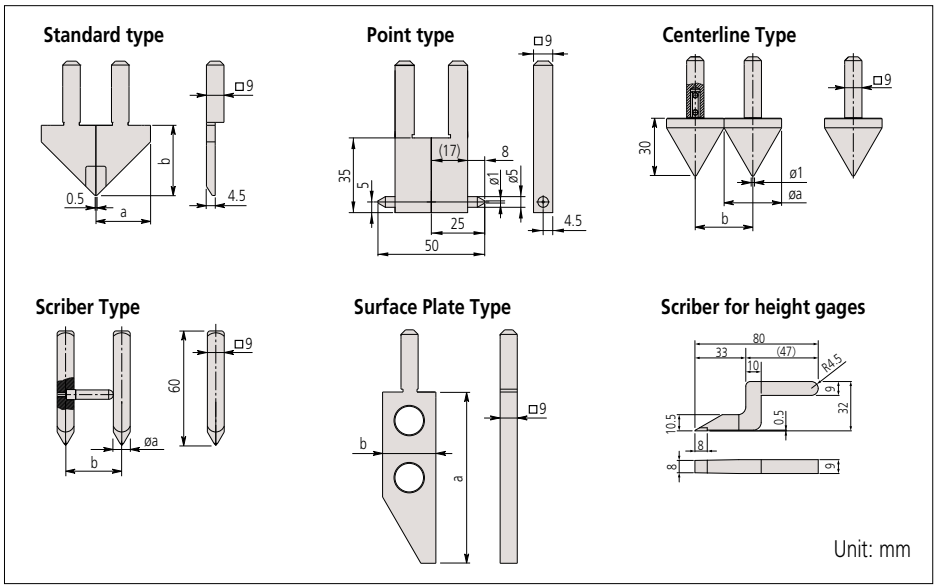

Standard Type

Order No.	Components	a	b
07CZA056	Right (**07CAA044**), Left (**07CAA045**)	1.1 in (28 mm)	1.2 in (36 mm)

Note: 1 set

Point Type

Order No.	Components	a	b
07CZA059	**07CZA048**×2 pcs.	1 in	2 in
07CZA058	**07CZA041**×2 pcs.	25 mm	50 mm

Centerline Type

Order No.	Components	a	b
07CZA060	**07CZA047**×2 pcs.	1.2 in	1.2 in
07CZA057	**07CZA039**×2 pcs.	30 mm	30 mm

Scriber Type

Order No.	Components	a	b
07CZA061	Right (**07CZA042**), Left (**07CZA049**)	0.31 in	1.2 in
07CZA055	Right (**07CZA042**), Left (**07CZA043**)	8 mm	30 mm

Surface Plate Type

Order No.	a	b
07CZA044	3.5 in (90 mm)	1.1 in (28 mm)

Note: Note that the error arising from the combination of surface plates is outside the scope of accuracy guarantee.

Scriber for height gages

Order No.
07GZA000

Type	Applicable calipers	Range	Accuracy*
Standard type	**552-191-10 (552-181-10)**	0 - 18 in (0 - 450 mm)	±0.0025 in (±0.06 mm)
	552-192-10 (552-182-10)	0 - 24 in (0 - 600 mm)	
	552-193-10 (552-183-10)	0 - 40 in (0 - 1000 mm)	±0.0030 in (±0.07 mm)
	552-194-10 (552-184-10)	0 - 60 in (0 - 1500 mm)	±0.0045 in (±0.11 mm)
	552-195-10 (552-185-10)	0 - 80 in (0 - 2000 mm)	±0.0055 in (±0.14 mm)
Point type	**552-191-10 (552-181-10)**	Inside: 2.004 - 20 in (50.1 - 500 mm)	—
		Outside: 0 - 18 in (0 - 450 mm)	±0.0035 in (±0.09 mm)
	552-192-10 (552-182-10)	Inside: 2.004 - 26 in (50.1 - 650 mm)	—
		Outside: 0 - 24 in (0 - 600 mm)	±0.0035 in (±0.09 mm)
	552-193-10 (552-183-10)	Inside: 2.004 - 42 in (50.1 - 1050 mm)	—
		Outside: 0 - 40 in (0 - 1000 mm)	±0.0040 in (±0.10 mm)
	552-194-10 (552-184-10)	Inside: 2.004 - 62 in (50.1 - 1550 mm)	—
		Outside: 0 - 60 in (0 - 1500 mm)	±0.0055 in (±0.14 mm)
	552-195-10 (552-185-10)	Inside: 2.004 - 82 in (50.1 - 2050 mm)	—
		Outside: 0 - 80 in (0 - 2000 mm)	±0.0070 in (±0.17 mm)
Centerline type	**552-191-10 (552-181-10)**	1.204 - 19.2 in (30.1 - 480 mm)	
	552-192-10 (552-182-10)	1.204 - 25.2 in (30.1 - 630 mm)	
	552-193-10 (552-183-10)	1.204 - 41.2 in (30.1 - 1030 mm)	
	552-194-10 (552-184-10)	1.204 - 61.2 in (30.1 - 1530 mm)	
	552-195-10 (552-185-10)	1.204 - 81.2 in (30.1 - 2030 mm)	
Scriber type	**552-191-10 (552-181-10)**	1.204 - 19.2 in (30.1 - 480 mm)	
	552-192-10 (552-182-10)	1.204 - 25.2 in (30.1 - 630 mm)	
	552-193-10 (552-183-10)	1.204 - 41.2 in (30.1 - 1030 mm)	
	552-194-10 (552-184-10)	1.204 - 61.2 in (30.1 - 1530 mm)	
	552-195-10 (552-185-10)	1.204 - 81.2 in (30.1 - 2030 mm)	
Surface plate type + Scriber type for height gages	**552-191-10 (552-181-10)**	0 - 17.7 in (0 - 450 mm)	±0.0040 in (±0.10 mm)
	552-192-10 (552-182-10)	0 - 23.7 in (0 - 600 mm)	
	552-193-10 (552-183-10)	0 - 39.4 in (0 - 1000 mm)	±0.0045 in (±0.11 mm)
	552-194-10 (552-184-10)	0 - 59.4 in (0 - 1500 mm)	±0.0060 in (±0.15 mm)
	552-195-10 (552-185-10)	0 - 79.6 in (0 - 2000 mm)	±0.0070 in (±0.18 mm)
Surface plate type + Point type	**552-191-10 (552-181-10)**	Outside: 0 - 18 in (0 - 450 mm)	±0.0050 in (±0.12 mm)
	552-192-10 (552-182-10)	Outside: 0 - 24 in (0 - 600 mm)	±0.0050 in (±0.12 mm)
	552-193-10 (552-183-10)	Outside: 0 - 40 in (0 - 1000 mm)	±0.0055 in (±0.13 mm)
	552-194-10 (552-184-10)	Outside: 0 - 60 in (0 - 1500 mm)	±0.0070 in (±0.17 mm)
	552-195-10 (552-185-10)	Outside: 0 - 80 in (0 - 2000 mm)	±0.0080 in (±0.20 mm)
Surface plate type + Centerline type	**552-191-10 (552-181-10)**	0.6 - 18.6 in (15.1 - 465 mm)	
	552-192-10 (552-182-10)	0.6 - 24.6 in (15.1 - 615 mm)	
	552-193-10 (552-183-10)	0.6 - 40.6 in (15.1 - 1015 mm)	
	552-194-10 (552-184-10)	0.6 - 60.6 in (15.1 - 1515 mm)	
	552-195-10 (552-185-10)	0.6 - 80.6 in (15.1 - 2015 mm)	

( ): Inch/Metric models

*E_{MPE} (ISO 13385-1:2019 and ASME B89.1.14-2018). Largest value across the measuring range.

Need Support?

Calipers

Optional Accessories

Interchangeable jaws

Typical applications

Surface plate type + Standard type

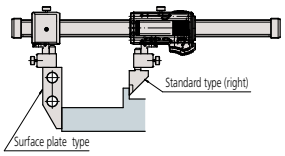

Scriber type

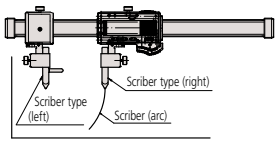

Point type

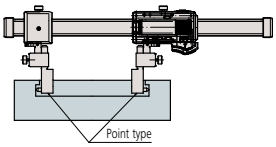

Surface plate type + Scriber for height gages

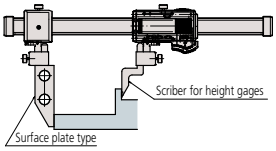

Surface plate type + Centerline type

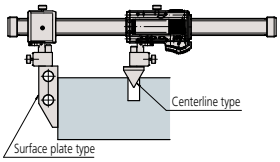

The above combinations are examples only.
Contact us for advice on accuracy when using a contact point in a combination other than as shown above.

D

Need Service?

MeasurLink ENABLED
Data Management Software by Mitutoyo
U-WAVE fit
ABSOLUTE™
TÜVRheinland CERTIFIED
Dust- and Water-Protected
IP67

Measurement Example

Optional Output Devices (0-12 in Models)

Order No.	Description
Wired	
264-020	USB Input tool (**IT-020U**)
- 05CZA624	Connecting Cable (**1m**)
- 05CZA625	Connecting Cable (**2m**)
06AFM380A	USB Input Tool Direct (**2m**)
Wireless	
264-620	Transmitter (**IP67**)
264-624	Transmitter (**IP67, Bluetooth**)
264-621	Transmitter (**Buzzer**)
264-625	Transmitter (**Buzzer, Bluetooth**)
- 02AZF310	Connecting Unit (**Adapter**)
- 02AZE140A	Connecting Cable (**foot switch compatible**)

Note: Model uses connector type "A"

Optional Output Devices (18-40 in Models)

Order No.	Description
Wired	
264-020	USB Input tool (**IT-020U**)
- 959149	Connecting Cable (**1m**)
- 959150	Connecting Cable (**2m**)
06AFM380C	USB Input Tool Direct (**2m**)
Wireless	
264-620	Transmitter (**IP67**)
264-624	Transmitter (**IP67, Bluetooth**)
264-621	Transmitter (**Buzzer**)
264-625	Transmitter (**Buzzer, Bluetooth**)
- 02AZD790C	Connecting Cable
- 02AZE140C	Connecting Cable (**foot switch compatible**)

Note: Model uses connector type "C"

ABSOLUTE Digimatic Caliper SERIES 550 — with Nib Style Jaws

- This model can measure both inside and outside dimensions with a specially shaped jaw.
- The digital display can reduce human error by preventing incorrect reading of measurement results. **550-3XX-20** is rated at IP67 and therefore can be reliably used at the manufacturing site.
- Data output function allows integration into statistical process control and measurement systems. (Refer to section A).
- ID measurement value: displayed value + (a compensation value displayed on the main unit). OFFSET switch allows to input a compensation value so that the measurement value can be read directly (**550-3XX-20**). Preset function allows to set a desired starting point (**550-331-20** and **550-341-20**).

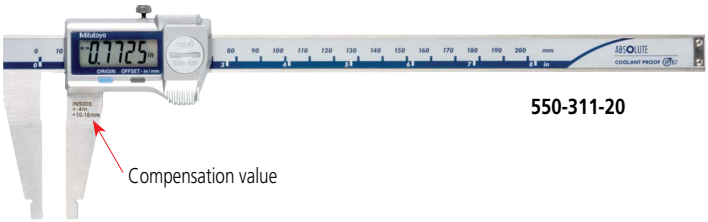

550-311-20

SPECIFICATIONS

Inch / Metric

Order No.	Range*1	Resolution	Accuracy*	Remarks
550-311-20	0 - 8 in/0 - 200 mm (0.404 - 8.4 in/10.26 - 210.16 mm)	0.0005 in/ 0.01 mm	±0.0015 in/ ±0.03 mm	IP67, with offset
550-341-20	0 - 12 in/0 - 300 mm (0.404 - 12.4 in/10.26 - 310.16 mm)		±0.002 in/ ±0.04 mm	IP67, with offset/preset function for easy inside measurement
550-223-10	0 - 18 in/0 - 450 mm (0.504 - 18.5 in/12.8 - 462.7 mm)		±0.002 in/ ±0.05 mm	—
550-225-10	0 - 24 in/0 - 600 mm (0.504 - 24.5 in/12.8 - 612.7 mm)			—
550-227-10	0 - 40 in/0 - 1000 mm (1.004 - 41 in/25.5 - 1025.4 mm)		±0.003 in/ ±0.07 mm	—

Metric

Order No.	Range (mm)*1	Resolution (mm)	Accuracy (mm)*	Remarks
550-301-20	0 - 200 (10.1 - 210)	0.01	±0.03	IP67, with offset
550-331-20	0 - 300 (10.1 - 310)		±0.04	IP67, with offset/preset function for easy inside measurement
550-203-10	0 - 450 (20.1 - 470)		±0.05	—
550-205-10	0 - 600 (20.1 - 620)			—
550-207-10	0 - 1000 (20.1 - 1020)		±0.07	—

- Power source: SR44 battery (1 pc.), **938882** included as standard (for operational checks)

* E_{MPE} (ISO 13385-1:2019 and ASME B89.1.14-2018). Largest value across the measuring range. See page D-46 for MPE table.

*1 ( ): Inside measurement

DIMENSIONS

Unit: mm

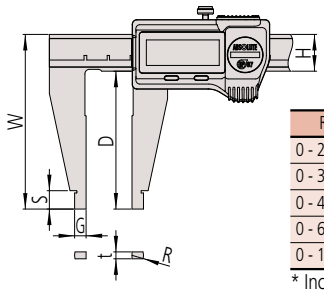

Range (mm)	D	G	S	W	H	t	R
0 - 200 (0 - 8 in)*	60	5 (5.08)*	8	76	16	3	5 (5.08)*
0 - 300 (0 - 12 in)*	75		12	95	20	3.8	
0 - 450 (0 - 18 in)*	100	10 (6.35)*	18	125	25	6	10 (6.35)*
0 - 600 (0 - 24 in)*							
0 - 1000 (0 - 40 in)*	140	10 (12.7)*	24	172	32	8	10 (12.7)*

* Inch model

Mitutoyo

Calipers

ABSOLUTE Digimatic Caliper SERIES 551 — with Nib Style and Standard Jaws

- This model has a smaller jaw for outside measurements and a larger jaw for inside and outside measurements. Use the jaws that are suitable for your application. The jaw for outside measurement has sharp tips that are helpful for measuring thin parts.
- The digital display can reduce human error by preventing incorrect reading of measurement results. **551-3XX-20** is rated at IP67 and therefore can be reliably used at the manufacturing site.
- Incorporates the Mitutoyo ABSOLUTE measurement system. No need to reset the origin after switching on.
- ID measurement value: displayed value + (a compensation value displayed on the main unit). OFFSET switch allows to input a compensation value so that the measurement value can be read directly (**551-3XX-20**). Preset function allows to set a desired starting point (**551-331-20** and **551-341-20**).

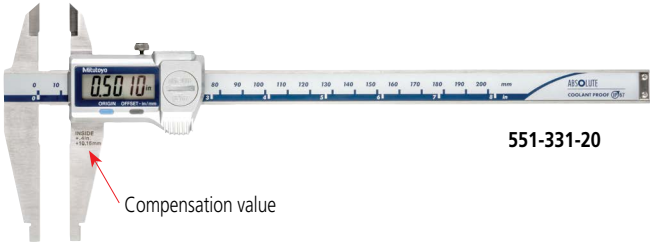

551-331-20

SPECIFICATIONS

Inch / Metric

Order No.	Range*1	Resolution	Accuracy*	Remarks
551-311-20	0 - 8 in/0 - 200 mm (0.404 - 8.4 in/10.26 - 210.16 mm)	0.0005 in/ 0.01 mm	±0.0015 in/ ±0.03 mm	IP67, with offset
551-341-20	0 - 12 in/0 - 300 mm (0.404 - 12.4 in/10.26 - 310.16 mm)		±0.002 in/ ±0.04 mm	IP67, with offset/preset function for easy inside measurement
551-224-10	0 - 20 in/0 - 500 mm (0.504 - 20.5 in/12.8 - 512.7 mm)		±0.0025 in/ ±0.06 mm	—
551-226-10	0 - 30 in/0 - 750 mm (0.504 - 30.5 in/12.8 - 762.7 mm			
551-227-10	0 - 40 in/0 - 1000 mm (1.004 - 40.1 in/25.5 - 1025.4 mm)		±0.003 in/ ±0.07 mm	

Metric

Order No.	Range (mm)*1	Resolution (mm)	Accuracy (mm)*	Remarks
551-301-20	0 - 200 (10.1 - 210)	0.01	±0.03	IP67, with offset
551-331-20	0 - 300 (10.1 - 310)		±0.04	IP67, with offset/preset function for easy inside measurement
551-204-10	0 - 500 (20.1 - 520)		±0.06	—
551-206-10	0 - 750 (20.1 - 770)			
551-207-10	0 - 1000 (20.1 - 1020)		±0.07	

- Power source: SR44 battery (1 pc.), **938882** included as standard (for operational checks)

* E_{MPE} (ISO 13385-1:2019 and ASME B89.1.14-2018). Largest value across the measuring range. See page D-46 for MPE table.

*1 ( ): Inside measurement

DIMENSIONS

Unit: mm

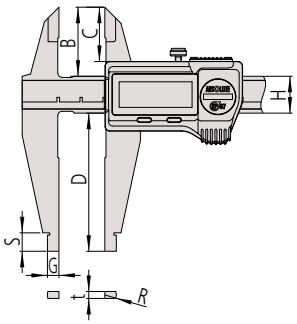

Range (mm)	B	C	D	G	S	H	t	R
0 - 200 (0 - 8 in)*	30	23.6	60	5 (5.08)*	8	16	3	5 (5.08)*
0 - 300 (0 - 12 in)*	40	32.2	90		10	20	3.8	
0 - 500 (0 - 20 in)*	56	44.9	150	10 (6.35)*	18	25	6	10 (6.35)*
0 - 750 (0 - 30 in)*	56							
0 - 1000 (0 - 40 in)*	56	43.8		10 (12.7)*	20	32	8	10 (12.7)*

* Inch model

MeasurLink ENABLED Data Management Software by Mitutoyo

U-WAVE fit

ABSOLUTE™

TÜVRheinland CERTIFIED Dust- and Water-Protected www.tuv.com ID 0000045042

IP67

Measurement Example

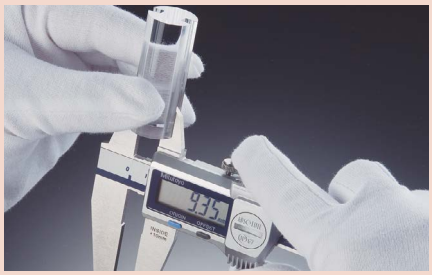

Optional Output Devices (0-12 in Models)

Order No.	Description
Wired	
264-020	USB Input tool (**IT-020U**)
- 05CZA624	Connecting Cable (**1m**)
- 05CZA625	Connecting Cable (**2m**)
06AFM380A	USB Input Tool Direct (**2m**)
Wireless	
264-620	Transmitter (**IP67**)
264-624	Transmitter (**IP67, Bluetooth**)
264-621	Transmitter (**Buzzer**)
264-625	Transmitter (**Buzzer, Bluetooth**)
- 02AZF310	Connecting Unit (**Adapter**)
- 02AZE140A	Connecting Cable (**foot switch compatible**)

Note: Model uses connector type "A"

Optional Output Devices (20-40 in Models)

Order No.	Description
Wired	
264-020	USB Input tool (**IT-020U**)
- 959149	Connecting Cable (**1m**)
- 959150	Connecting Cable (**2m**)
06AFM380C	USB Input Tool Direct (**2m**)
Wireless	
264-620	Transmitter (**IP67**)
264-624	Transmitter (**IP67, Bluetooth**)
264-621	Transmitter (**Buzzer**)
264-625	Transmitter (**Buzzer, Bluetooth**)
- 02AZD790C	Connecting Cable
- 02AZE140C	Connecting Cable (**foot switch compatible**)

Note: Model uses connector type "C"

Vernier Caliper
SERIES 533 — with Nib Style and Standard Jaws

- Allows inside and outside measurements directly from the upper and lower Vernier scales.
- Main scale and Vernier scale with a satin chrome finish provides better readability.

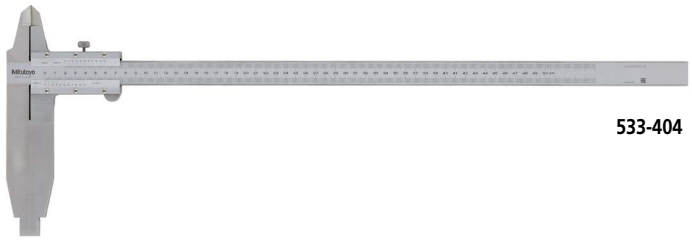

533-404

SPECIFICATIONS

Metric

Order No.	Range (mm)*1	Resolution (mm)	Accuracy (mm)*	Remarks
533-404	0 - 500 (20.1 - 520)	0.05	±0.10	—
533-504		0.02	±0.05	with fine adjustment
533-505	0 - 750 (20.1 - 770)		±0.06	
533-405		0.05	±0.12	—
533-406	0 - 1000 (20.1 - 1020)		±0.15	
533-506		0.02	±0.07	with fine adjustment

* E_{MPE} (ISO 13385-1:2019 and ASME B89.1.14-2018). Largest value across the measuring range. See page D-46 for MPE table.
*1 ( ): Inside measurement

DIMENSIONS

Unit: mm

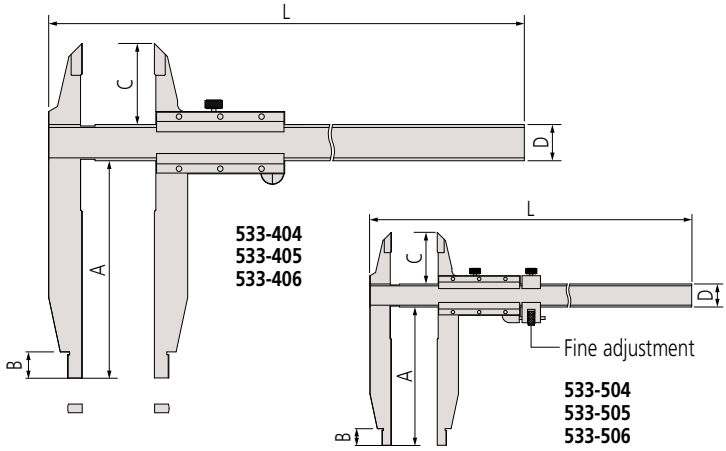

Range (mm)	A	B	C	D	L
0 - 500	150	18	56	25	680
0 - 750					963
0 - 1000		20		32	1230

Need Calibration?

Calipers

Vernier Caliper
SERIES 160 — with Nib Style Jaws and Fine Adjustment

- The jaws' measuring faces have a radius for accurate inside diameter (ID) measurement. Inside and outside measurements can be read directly from the upper and lower slider graduations respectively.
- With fine adjustment (**Order No. 160-127/128/101/104**).

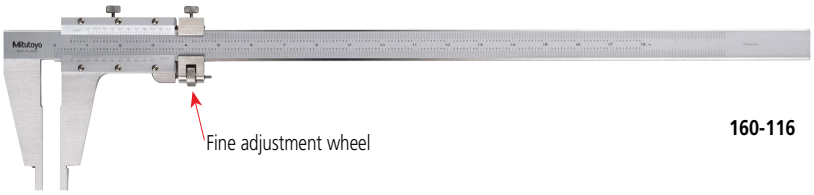

160-116

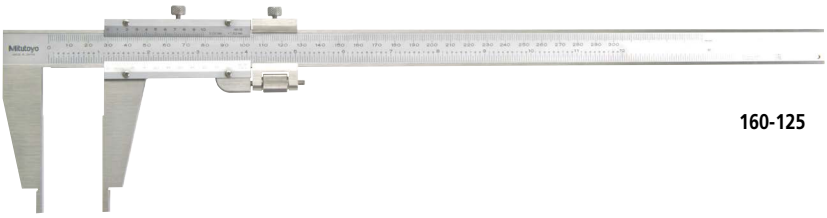

160-125

D

Measurement Example

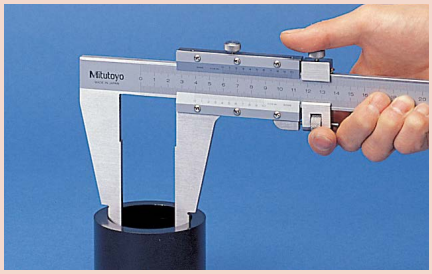

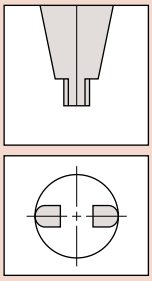

Radiused jaws for accurate ID measurement

Measurement Example

SPECIFICATIONS

Inch

Order No.	Range (in)*1	Minimum reading (in)	Accuracy (in)*	Remarks
160-124	0 (0.304) - 12	0.001	±0.0015	—
160-116	0 (0.504) - 18		±0.002	
160-102	0 (0.504) - 24			
160-105	0 (1.004) - 40		±0.003	

* E_{MPE} (ISO 13385-1:2019 and ASME B89.1.14-2018). Largest value across the measuring range. See page D-46 for MPE table.
*1 ( ): Minimum dimension in ID measurement

Inch/Metric with metric/inch double scale

Order No.	Range*1	Minimum reading	Accuracy*	Remarks
160-125	0 - 12 in/0 - 300 mm (0.304 - 12 in/7.72 - 300 mm)	0.001 in/ 0.02 mm	±0.0015 in/ ±0.04 mm	+0.3 in/7.62 mm to reading in inside measurement
160-119	0 - 18 in/0 - 450 mm (0.504 - 18 in/12.8 - 450 mm)		±0.002 in/ ±0.05 mm	+0.5 in/12.7 mm to reading in inside measurement
160-103	0 - 24 in/0 - 600 mm (0.504 - 24 in/12.8 - 600 mm)			
160-106	0 - 40 in/0 - 1000 mm (1.004 - 40 in/25.5 - 1000 mm)		±0.003 in/ ±0.07 mm	+1 in/25.4 mm to reading in inside measurement

* E_{MPE} (ISO 13385-1:2019 and ASME B89.1.14-2018). Largest value across the measuring range. See page D-46 for MPE table.
*1 ( ): Minimum dimension in ID measurement

Find a Distributor

Metric/Inch with metric/inch double scale

Order No.	Range*1	Minimum reading	Accuracy*	Remarks
160-150	0 - 300 mm/0 - 12 in (10.1 - 300 mm/0.398 - 12 in)	0.02 mm/ 0.001 in	±0.04 mm/ ±0.0015 in	+10 mm/0.394 in to reading in inside measurement
160-151	0 - 450 mm/0 - 18 in (20.1 - 450 mm/0.791 - 18 in)		±0.05 mm/ ±0.002 in	+20 mm/0.787 in to reading in inside measurement
160-153	0 - 600 mm/0 - 24 in (20.1 - 600 mm/0.791 - 24 in)			
160-155	0 - 1000 mm/0 - 40 in (20.1 - 1000 mm/0.791 - 24 in)		±0.07 mm/ ±0.003 in	

* E_{MPE} (ISO 13385-1:2019 and ASME B89.1.14-2018). Largest value across the measuring range. See page D-46 for MPE table.
*1 ( ): Minimum dimension in ID measurement

Metric

Order No.	Range (mm)*1	Minimum reading (mm)	Accuracy (mm)*	Remarks
160-130	0 (20.1) - 450	0.05	±0.10	without fine adjustment
160-131	0 (20.1) - 600			
160-132	0 (20.1) - 1000		±0.15	

* E_{MPE} (ISO 13385-1:2019 and ASME B89.1.14-2018). Largest value across the measuring range. See page D-46 for MPE table.
*1 ( ): Minimum dimension in ID measurement

Metric

Order No.	Range (mm)*1	Minimum reading (mm)	Accuracy (mm)*	Remarks
160-127	0 (10.1) - 300	0.02	±0.04	with fine adjustment
160-128	0 (20.1) - 450		±0.05	
160-101	0 (20.1) - 600			
160-104	0 (20.1) - 1000		±0.07	

* E_{MPE} (ISO 13385-1:2019 and ASME B89.1.14-2018). Largest value across the measuring range. See page D-46 for MPE table.
*1 ( ): Minimum dimension in ID measurement

DIMENSIONS

Unit: mm

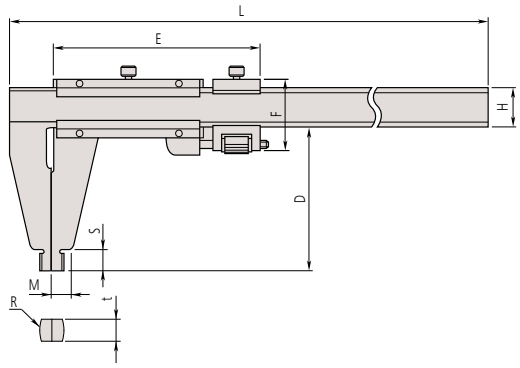

Range	D	E	F	H	L	M	R	S	t
0 - 300 mm/0 - 12 in	75	103	38	20	445	10	R5	12	3.8
0 - 450 mm*	100	89	—	25	630	14.8	R10	18	6
0 - 450 mm/0 - 18 in		112	51						
0 - 600 mm*		89	—		780				
0 - 600 mm/0 - 24 in		112	51						
0 - 1000 mm*	140	111	—	32	1240	17		24	8
0 - 1000 mm/0 - 40 in		150	62.5						

* Without fine adjustment

Calipers

Long Jaw Vernier Caliper SERIES 534

- Long jaws for measuring hard-to-reach workpiece features. Suitable for measuring outside diameter of workpieces such as large pipes or spherical objects.
- Inside and outside measurements can be read directly from the upper and lower slider graduations respectively.

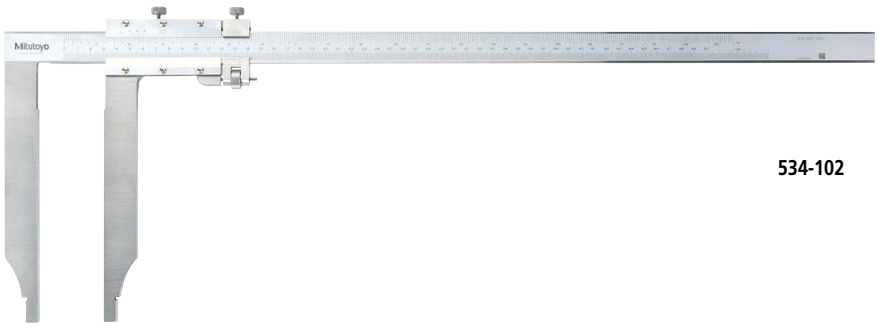

534-102

D

SPECIFICATIONS

Metric/Inch with metric/inch double scale

Order No.	Range*1	Graduation	Accuracy*	Remarks
534-101	0 - 300 mm/0 - 12 in (10.1 - 300 mm/0.398 - 12 in)	0.05 mm/ 1/128 in	±0.07 mm/ ±0.5/128 in	+10 mm/0.394 in to reading in inside measurement without fine adjustment
534-105	0 - 300 mm/0 -12 in (10.1 - 300 mm/0.398 - 12 in)	0.02 mm/ 0.001 in	±0.04 mm/ ±0.0015 in	
534-102	0 - 500 mm/0 - 20 in (20.1 - 500 mm/0.791 - 20 in)	0.05 mm/ 1/128 in	±0.13 mm/ ±0.5/128 in	+20 mm/0.787 in to reading in inside measurement without fine adjustment
534-106		0.02 mm/ 0.001 in	±0.06 mm/ ±0.0025 in	
534-103	0 - 750 mm/0 - 30 in (20.1 - 750 mm/0.791 - 30 in)	0.05 mm/ 1/128 in	±0.16 mm/ ±1/128 in	
534-107		0.02 mm/ 0.001 in	±0.08 mm/ ±0.003 in	
534-104	0 - 1000 mm/0 - 40 in (20.1 - 1000 mm/0.791 - 40 in)	0.05 mm/ 1/128 in	±0.2 mm/ ±1/128 in	
534-108		0.02 mm/ 0.001 in	±0.1 mm/ ±0.004 in	

* E_{MPE} (ISO 13385-1:2019 and ASME B89.1.14-2018). Largest value across the measuring range. See page D-46 for MPE table.
*1 ( ): Minimum dimension in ID measurement

Metric

Order No.	Range (mm)*1	Graduation (mm)	Accuracy*	Remarks
534-109	0 (10.1) - 300	0.05	±0.07	without fine adjustment
534-110	0 (20.1) - 500		±0.13	

* E_{MPE} (ISO 13385-1:2019 and ASME B89.1.14-2018). Largest value across the measuring range. See page D-46 for MPE table.
*1 ( ): Minimum dimension in ID measurement

Got Questions?

Long Jaw Vernier Caliper SERIES 534

- Long jaws for measuring hard-to-reach workpiece features. Suitable for measuring outside diameter of workpieces such as large pipes or spherical objects.
- Inside and outside measurements can be read directly from the upper and lower slider graduations respectively.
- Fine adjustment for more accurate measurement.

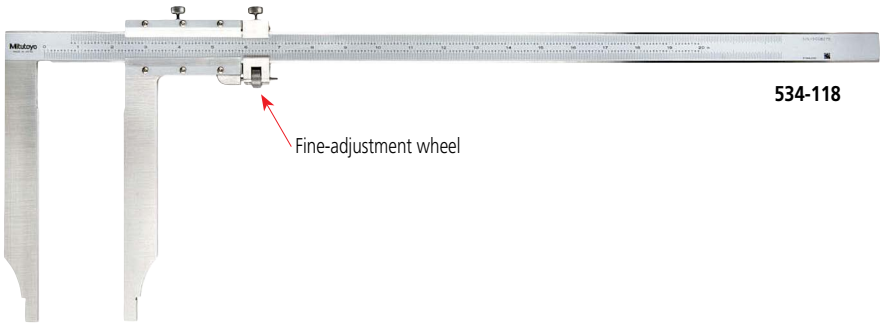

534-118

SPECIFICATIONS

Inch

Order No.	Range (in)*1	Graduation (in)	Accuracy (in)*	Remarks
534-117	0 (0.304) - 12	0.001	±0.0015	with fine adjustment
534-118	0 (0.804) - 20		±0.0025	
534-119	0 (0.804) - 30		±0.003	
534-120	0 (0.804) - 40		±0.004	

* E_{MPE} (ISO 13385-1:2019 and ASME B89.1.14-2018). Largest value across the measuring range. See page D-46 for MPE table.
*1 ( ): Minimum dimension in ID measurement

Metric

Order No.	Range (mm)*1	Graduation (mm)	Accuracy (mm)*	Remarks
534-113	0 (10.1) - 300	0.02	±0.04	with fine adjustment
534-114	0 (20.1) - 500		±0.06	
534-115	0 (20.1) - 750		±0.08	
534-116	0 (20.1) - 1000		±0.10	

* E_{MPE} (ISO 13385-1:2019 and ASME B89.1.14-2018). Largest value across the measuring range. See page D-46 for MPE table.
*1 ( ): Minimum dimension in ID measurement

DIMENSIONS

Unit: mm

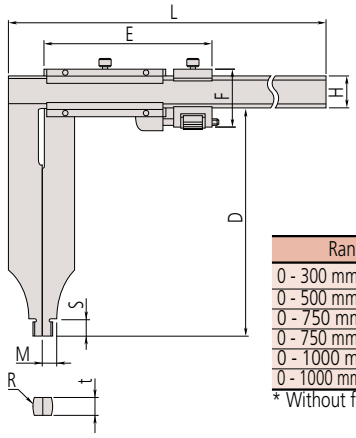

Range	D	E	F	H	L	M	R	S	t
0 - 300 mm/0 - 12 in	90	103	38	20	445	7	R5	12	3.8
0 - 500 mm/0 - 20 in	200	112	51	25	682	12	R10	18.5	6
0 - 750 mm*		150	—	32	995				
0 - 750 mm/0 - 30 in			62.5						8
0 - 1000 mm*			—		1230				
0 - 1000 mm/0 - 40 in			62.5						

* Without fine adjustment

Calipers

Offset Caliper
SERIES 573 — ABSOLUTE Digimatic Type

- The beam-mounted jaw can be adjusted to facilitate measurement of stepped sections.

573-701-20

D

SPECIFICATIONS

Inch / Metric Digimatic model

Order No.	Range	Resolution	Accuracy*
573-701-20	0 - 6 in/0 - 150 mm	0.0005 in/0.01 mm	±0.001 in/±0.02 mm
573-702-20	0 - 8 in/0 - 200 mm		
573-704-20	0 - 12 in/0 - 300 mm		±0.0015 in/±0.03 mm

Metric Digimatic model

Order No.	Range (mm)	Resolution (mm)	Accuracy (mm)*
573-601-20	0 - 150	0.01	±0.02
573-611-20*1			
573-602-20	0 - 200		
573-612-20*1			
573-604-20	0 - 300		±0.03
573-614-20*1			

- Power source: SR44 battery (1 pc.), **938882** included as standard (for operational checks)
- Battery life: Approx. 5 years under normal use

* E_{MPE} (ISO 13385-1:2019 and ASME B89.1.14-2018). Largest value across the measuring range. See page D-46 for MPE table.
*1 Without thumb roller

DIMENSIONS

Unit: mm

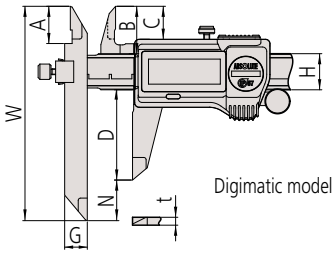

Digimatic model

Order No.	Model	Range (mm)	A	B	C	D	G	H	N	W	t
573-601-20	Digimatic model	0 - 150	16.5	21	14.6	40	10	16	(18)	95	3.5
573-602-20		0 - 200	20	24.5	18.1	50			(4.5)		
573-604-20		0 - 300	22	27.5	19.8	64	15	20	(23.5)	135	3.8

MeasurLink ENABLED Data Management Software by Mitutoyo
U-WAVE fit
ABSOLUTE™
TÜVRheinland CERTIFIED
Dust- and Water-Protected
www.tuv.com ID 0000045042
IP67

Measurement Example

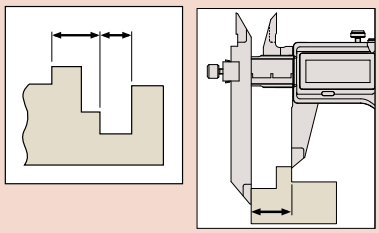

Optional Output Devices

Order No.	Description
Wired	
264-020	USB Input tool (**IT-020U**)
- 05CZA624	Connecting Cable (**1m**)
- 05CZA625	Connecting Cable (**2m**)
06AFM380A	USB Input Tool Direct (**2m**)
Wireless	
264-620	Transmitter (**IP67**)
264-624	Transmitter (**IP67, Bluetooth**)
264-621	Transmitter (**Buzzer**)
264-625	Transmitter (**Buzzer, Bluetooth**)
- 02AZF310	Connecting Unit (**Adapter**)
- 02AZE140A	Connecting Cable (**foot switch compatible**)

Note: Model uses connector type "A"

Offset Caliper
SERIES 536 — Vernier Type

- The beam-mounted jaw can be adjusted to facilitate measurement of stepped sections.

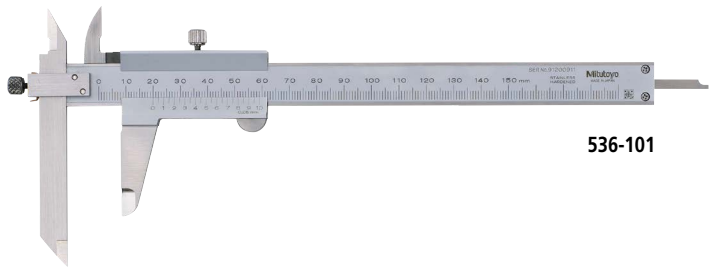

536-101

SPECIFICATIONS

Metric Analog model

Order No.	Range (mm)	Graduation (mm)	Accuracy (mm)*	
			E_{MPE}	S_{MPE}
536-101	0 - 150	0.05	±0.05	±0.07
536-102	0 - 200			
536-103	0 - 300		±0.08	±0.10

Metric

Order No.	Range (mm)	Graduation (mm)	Accuracy (mm)*	
			E_{MPE}	S_{MPE}
536-221	0 - 150	0.05	±0.05	±0.07
536-222	0 - 200			
536-223	0 - 300		±0.08	±0.10

* E_{MPE} (ISO 13385-1:2019 and ASME B89.1.14-2018). Largest value across the measuring range. See page D-46 for MPE table.

DIMENSIONS

Unit: mm

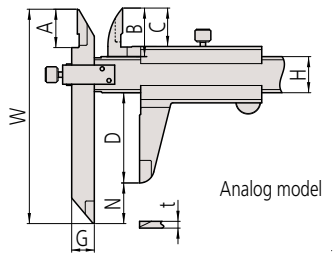

Analog model

Order No.	Model	Range (mm)	A	B	C	D	G	H	N	W	t
536-101	Analog model	0 - 150	17	21.5	17	40	10	16	(18)	95	3
536-102		0 - 200	20.5	25	20.5	50			(4)		
536-103		0 - 300	22	27.5	22	64	15	20	(23.5)	135	3.8

Talk to Sales

Calipers

Offset Centerline Caliper
SERIES 573 — ABSOLUTE Digimatic Type

- Specially designed for center-to-center hole diameter measurements on the same and offset planes. The beam-mounted jaw can be adjusted to facilitate the measurement of stepped sections.
- Direct reading of pitch measurement is available due to the offset-value setting function.

573-705-20

SPECIFICATIONS

Inch / Metric Digimatic model

Order No.	Range	Resolution	Accuracy*
573-705-20	0.404 - 6.4 in/10.26 - 160.16 mm	0.0005 in/0.01 mm	±0.0015 in/±0.03 mm
573-706-20	0.404 - 8.4 in/10.26 - 210.16 mm		
573-708-20	0.404 - 12.4 in/10.26- 310.16 mm		±0.0015 in/±0.04 mm

Metric Digimatic model

Order No.	Range (mm)	Resolution (mm)	Accuracy (mm)*
573-605-20	10.1 - 160	0.01	±0.03
573-615-20*1	10.1 - 160		
573-606-20	10.1 - 210		
573-616-20*1	10.1 - 210		
573-608-20	10.1 - 310		±0.04
573-618-20*1	10.1 - 310		

- Power source: SR44 battery (1 pc.), **938882** included as standard (for operational checks)
- Battery life: Approx. 5 years under normal use

* E_{MPE} (ISO 13385-1:2019 and ASME B89.1.14-2018). Largest value across the measuring range. See page D-46 for MPE table.
*1 Without thumb roller

DIMENSIONS

Unit: mm

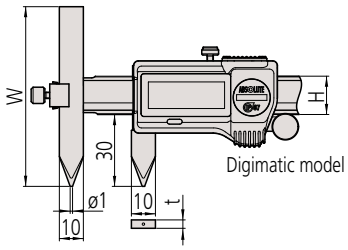

Range	H	W	t	Applicable hole
10.26 - 160.16 mm/0.404 - 6.4 in	16	75	3.5	ø1.5 - ø9.5 mm
10.26 - 210.16 mm/0.404 - 8.4 in				
10.26 - 310.16 mm/0.404 - 12.4 in	20	100	3.8	

MeasurLink ENABLED Data Management Software by Mitutoyo
U-WAVE fit
ABSOLUTE™
TÜVRheinland CERTIFIED Dust- and Water-Protected www.tuv.com ID 0000045042
IP67

Measurement Example

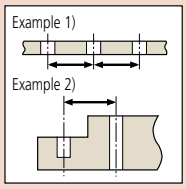

Optional Output Devices

Order No.	Description
Wired	
264-020	USB Input tool (**IT-020U**)
- 05CZA624	Connecting Cable (**1m**)
- 05CZA625	Connecting Cable (**2m**)
06AFM380A	USB Input Tool Direct (**2m**)
Wireless	
264-620	Transmitter (**IP67**)
264-624	Transmitter (**IP67, Bluetooth**)
264-621	Transmitter (**Buzzer**)
264-625	Transmitter (**Buzzer, Bluetooth**)
- 02AZF310	Connecting Unit (**Adapter**)
- 02AZE140A	Connecting Cable (**foot switch compatible**)

Note: Model uses connector type "A"

Inspection Equipment for Offset Caliper
05FAJ735

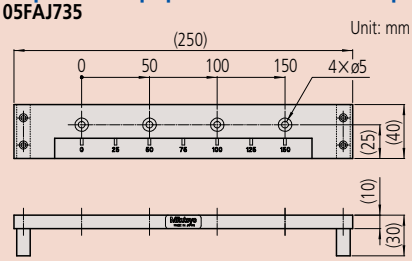

Offset Centerline Caliper SERIES 536 — Vernier Type

- Specially designed for center-to-center hole diameter measurements on the same and offset planes. The beam-mounted jaw can be adjusted to facilitate the measurement of stepped sections.

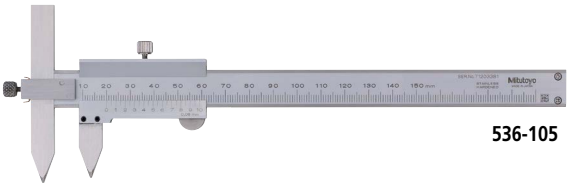

536-105

SPECIFICATIONS

Metric Analog model

Order No.	Range (mm)	Graduation (mm)	Accuracy (mm)*
536-105	10.1 - 150	0.05	±0.05
536-106	10.1 - 200		
536-107	10.1 - 300		±0.08

* E_{MPE} (ISO 13385-1:2019 and ASME B89.1.14-2018). Largest value across the measuring range. See page D-46 for MPE table.

DIMENSIONS

Unit: mm

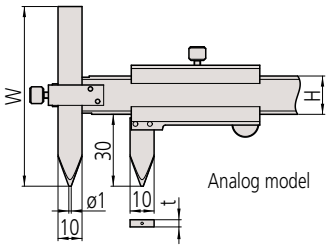

Analog model

Range (mm)	H	W	t	Applicable hole
10 - 150	16	75	3	ø1.5 - ø9.5 mm
10 - 200				
10 - 300	20	100	3.8	

Need Repair?

Calipers

ABSOLUTE Back-Jaw Centerline Caliper
SERIES 573 — Center-to-center & Edge-to-center

- Specially designed to measure hole center-to-center and edge-to-center distances.
- Provided with jaws on the back of the slider, measurements can be read easily from above.
- Direct reading of pitch measurement is possible due to the offset-value setting function.

Edge-to-center distance type

573-718-20

SPECIFICATIONS

Metric

Order No.	Range (mm)	Resolution (mm)	Accuracy (mm)*
573-718-20*1	10.1 - 200	0.01	±0.10
573-719-20*1	10.1 - 300		±0.15

- Power source: SR44 battery (1 pc.), **938882** included as standard (for operational checks)

* E_{MPE} (ISO 13385-1:2019 and ASME B89.1.14-2018). Largest value across the measuring range. See page D-46 for MPE table.

*1 Applicable hole diameter: ø1.5 - ø19.5 mm

DIMENSIONS

Unit: mm

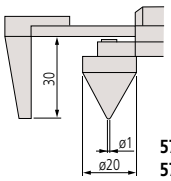

573-718-20
573-719-20

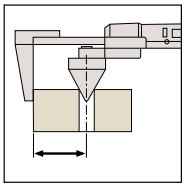

Center-to-center distance type

573-716-20

SPECIFICATIONS

Metric

Order No.	Range (mm)	Resolution (mm)	Accuracy (mm)*
573-716-20*1	10.1 - 200	0.01	±0.10
573-717-20*1	10.1 - 300		±0.15

- Power source: SR44 battery (1 pc.), **938882** included as standard (for operational checks)

* E_{MPE} (ISO 13385-1:2019 and ASME B89.1.14-2018). Largest value across the measuring range. See page D-46 for MPE table.

*1 Applicable hole diameter: ø1.5 - ø19.5 mm

DIMENSIONS

Unit: mm

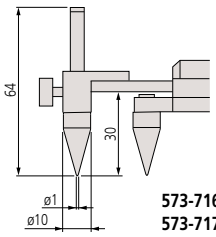

573-716-20
573-717-20

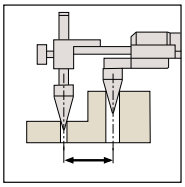

MeasurLink ENABLED
Data Management Software by Mitutoyo

ABSOLUTE™

IP67

Dust- and Water-Protected
TÜVRheinland CERTIFIED
www.tuv.com ID 0000045042

Optional Output Devices

Order No.	Description
Wired	
264-020	USB Input tool (**IT-020U**)
- 05CZA624	Connecting Cable (**1m**)
- 05CZA625	Connecting Cable (**2m**)
06AFM380A	USB Input Tool Direct (**2m**)
Wireless	
264-620	Transmitter (**IP67**)
264-624	Transmitter (**IP67, Bluetooth**)
264-621	Transmitter (**Buzzer**)
264-625	Transmitter (**Buzzer, Bluetooth**)
- 02AZD790A	Connecting Cable
- 02AZE140A	Connecting Cable (**foot switch compatible**)

Note: Model uses connector type "A"

Inspection Equipment for Center-to-Center Type*

05FAJ735

Unit: mm

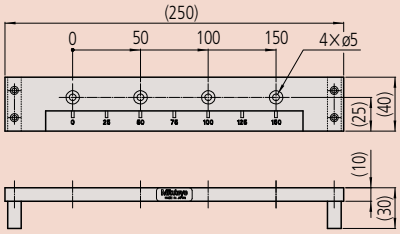

* Inspection equipment for Edge-to-center type is available by special order.

Where to Buy

MeasurLink ENABLED
Data Management Software by Mitutoyo
U-WAVE fit
ABSOLUTE™
TÜVRheinland CERTIFIED
Dust- and Water-Protected
www.tuv.com ID 0000045042
IP67

Measurement Example

Optional Output Devices

Order No.	Description
Wired	
264-020	USB Input tool (**IT-020U**)
- 05CZA624	Connecting Cable (**1m**)
- 05CZA625	Connecting Cable (**2m**)
06AFM380A	USB Input Tool Direct (**2m**)
Wireless	
264-620	Transmitter (**IP67**)
264-624	Transmitter (**IP67, Bluetooth**)
264-621	Transmitter (**Buzzer**)
264-625	Transmitter (**Buzzer, Bluetooth**)
- 02AZF310	Connecting Unit (**Adapter**)
- 02AZE140A	Connecting Cable (**foot switch compatible**)

Note: Model uses connector type "A"

Point Caliper
SERIES 573, 536 — ABSOLUTE Digimatic and Vernier Types

- Narrow-tip jaws fit into very small grooves and tracks, making many previously difficult outside measurements far easier to obtain.

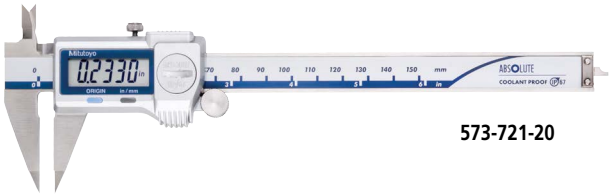

573-721-20

SPECIFICATIONS

Inch / Metric Digimatic model

Order No.	Range	Resolution	Accuracy*
573-721-20	0 - 6 in/0 - 150 mm	0.0005 in/0.01 mm	±0.001 in/±0.02 mm
573-725-20			

Metric Digimatic model

Order No.	Range (mm)	Resolution (mm)	Accuracy (mm)*
573-621-20	0 - 150	0.01	±0.02
573-625-20	0 - 150		
573-622-20*1	0 - 150		
573-626-20*1	0 - 150		

- Power source: SR44 battery (1 pc.), **938882** included as standard (for operational checks)
- Battery life: Approx. 5 years under normal use
- With depth bar

* E_{MPE} (ISO 13385-1:2019 and ASME B89.1.14-2018). Largest value across the measuring range. See page D-46 for MPE table.
*1 Without thumb roller

DIMENSIONS

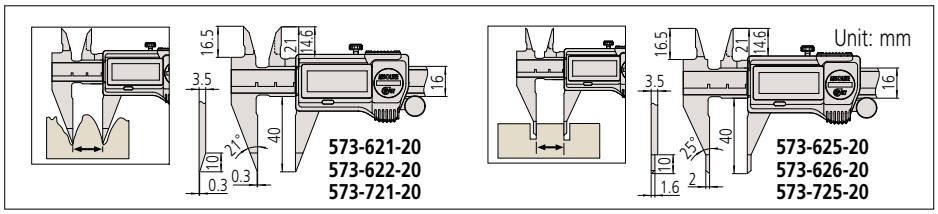

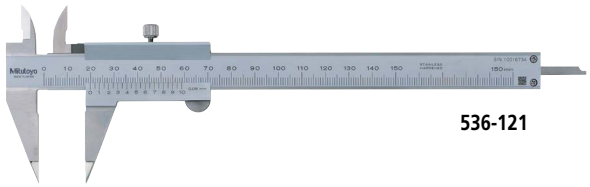

536-121

SPECIFICATIONS

Metric Analog model

Order No.	Range (mm)	Graduation (mm)	Accuracy (mm)*
536-121	0 - 150	0.05	±0.05

- With depth bar

* E_{MPE} (ISO 13385-1:2019 and ASME B89.1.14-2018). Largest value across the measuring range. See page D-46 for MPE table.

DIMENSIONS

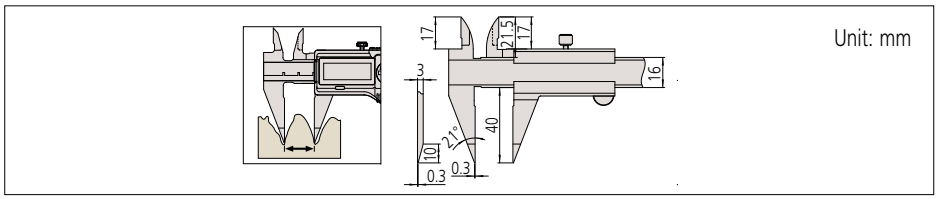

Mitutoyo

Calipers

Blade Type Caliper
SERIES 573 — ABSOLUTE Digimatic Type

- The thin blade-type jaws fit into very small grooves and make previously difficult outside measurements far easier to obtain.
- The outside measuring faces are carbide tipped.

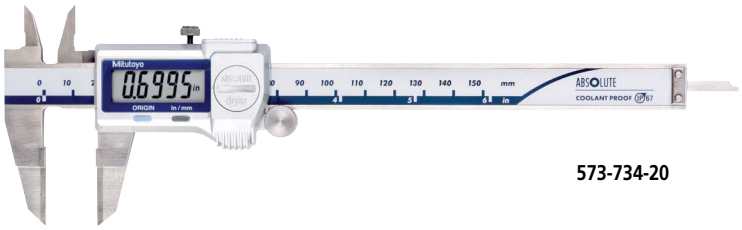

573-734-20

D

Measurement Example

Optional Output Devices

Order No.	Description
Wired	
264-020	USB Input tool (**IT-020U**)
- 05CZA624	Connecting Cable (**1m**)
- 05CZA625	Connecting Cable (**2m**)
06AFM380A	USB Input Tool Direct (**2m**)
Wireless	
264-620	Transmitter (**IP67**)
264-624	Transmitter (**IP67, Bluetooth**)
264-621	Transmitter (**Buzzer**)
264-625	Transmitter (**Buzzer, Bluetooth**)
- 02AZF310	Connecting Unit (**Adapter**)
- 02AZE140A	Connecting Cable (**foot switch compatible**)

Note: Model uses connector type "A"

SPECIFICATIONS

Inch / Metric Digimatic model

Order No.	Range	Resolution	Accuracy*
573-734-20	0 - 6 in/0 - 150 mm	0.0005 in/0.01 mm	±0.001 in/±0.02 mm

Metric Digimatic model

Order No.	Range (mm)	Resolution (mm)	Accuracy (mm)*
573-634-20	0 - 150	0.01	±0.02
573-635-20*1	0 - 150		

- Power source: SR44 battery (1 pc.), **938882** included as standard (for operational checks)
- Battery life: Approx. 5 years under normal use

* E_{MPE} (ISO 13385-1:2019 and ASME B89.1.14-2018). Largest value across the measuring range. See page D-46 for MPE table.

*1 Without thumb roller

DIMENSIONS

Unit: mm

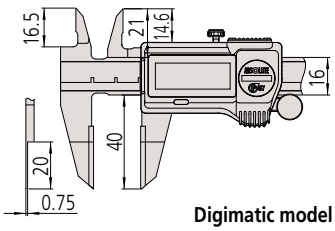

Digimatic model

Blade Type Caliper
SERIES 536 — Vernier Type

- The thin blade-type jaws fit into very small grooves and make previously difficult outside measurements far easier to obtain.
- The outside measuring faces are carbide tipped.

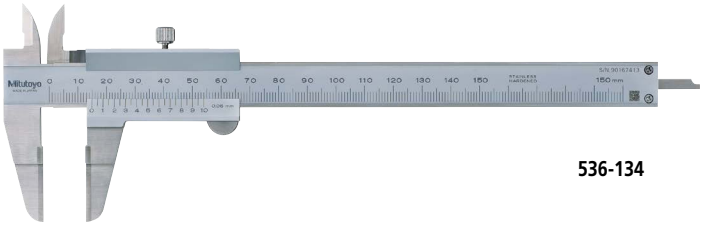

536-134

SPECIFICATIONS

Metric Analog model

Order No.	Range (mm)	Graduation (mm)	Accuracy (mm)*
536-134	0 - 150	0.05	±0.05
536-135	0 - 200		
536-136	0 - 300		±0.08

* E_{MPE} (ISO 13385-1:2019 and ASME B89.1.14-2018). Largest value across the measuring range. See page D-46 for MPE table.

DIMENSIONS

Unit: mm

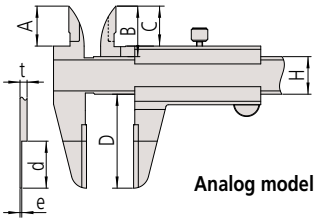

Analog model

Range (mm)	A	B	C	D	d	e	H	t
0 - 150	17	21.5	17	40	20	0.75	16	3
0 - 200	20.5	25	20.5	50	25			
0 - 300	22	27.5	22	64	30	1	20	3.8

Get a Quote

Calipers

ABSOLUTE Inside Caliper
SERIES 573 — Knife-edge/Inside Groove/Point Jaw Type

- Specially designed for inside measurements. Select the right model for your workpiece shape.

Knife-edge type

573-742-20

Inside groove type

Compensation value

573-745-20

Point jaw type

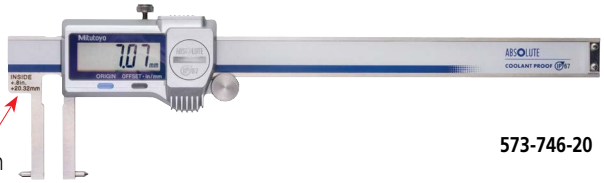

Compensation value

573-746-20

SPECIFICATIONS

Inch / Metric — Digimatic model

Order No.	Range	Resolution	Accuracy*	Remarks
573-742-20	0.4 - 8 in/ 10 - 200 mm	0.0005 in/ 0.01 mm	±0.002 in/ ±0.05 mm	Knife-edge type, Measurable min.
573-745-20*2	0.404 - 6.4 in/ 10.26 - 160.16 mm			Inside groove type, Measurable min.
573-746-20*2	0.804 - 6.8 in/ 20.42 - 170.32 mm		±0.0015 in/ ±0.03 mm	Point jaw type, Measurable min.

Metric — Digimatic model

Order No.	Range (mm)	Resolution (mm)	Accuracy (mm)*	Remarks
573-642-20	10 - 200	0.01	±0.05	Knife-edge type, Measurable min.
573-643-20*1	10 - 200			Knife-edge type, Measurable min.
573-645-20*2	10.1 - 160			Inside groove type, Measurable min.
573-647-20*1	10.1 - 160			Inside groove type, Measurable min.
573-646-20*2	20.1 - 170		±0.03	Point jaw type, Measurable min.
573-648-20*1	20.1 - 170			Point jaw type, Measurable min.

- Power source: SR44 battery (1 pc.), **938882** included as standard (for operational checks)
- Battery life: Approx. 5 years under normal use

* E_{MPE} (ISO 13385-1:2019 and ASME B89.1.14-2018). Largest value across the measuring range.
*1 Without thumb roller
*2 Includes the offsetting function, which indicates the actual measurement value.

MeasurLink ENABLED Data Management Software by Mitutoyo
U-WAVE fit
ABSOLUTE™
TÜVRheinland CERTIFIED — Dust- and Water-Protected — www.tuv.com ID 0000045042
IP67

Measurement Example

Optional Output Devices

Order No.	Description
Wired	
264-020	USB Input tool (**IT-020U**)
- 05CZA624	Connecting Cable (**1m**)
- 05CZA625	Connecting Cable (**2m**)
06AFM380A	USB Input Tool Direct (**2m**)
Wireless	
264-620	Transmitter (**IP67**)
264-624	Transmitter (**IP67, Bluetooth**)
264-621	Transmitter (**Buzzer**)
264-625	Transmitter (**Buzzer, Bluetooth**)
- 02AZF310	Connecting Unit (**Adapter**)*1
- 02AZD790A	Connecting Cable
- 02AZE140A	Connecting Cable (**foot switch compatible**)

Note: Model uses connector type "A"
*1 Not Compatible w/ Knife-Edge Type, must use Cable

Need Support?

DIMENSIONS

Unit: mm

Knife-edge type: 573-642-20, 573-643-20, 573-742-20

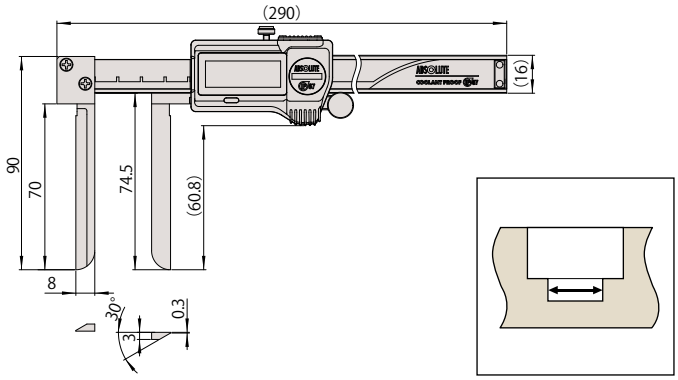

Inside groove type: 573-645-20, 573-647-20, 573-745-20

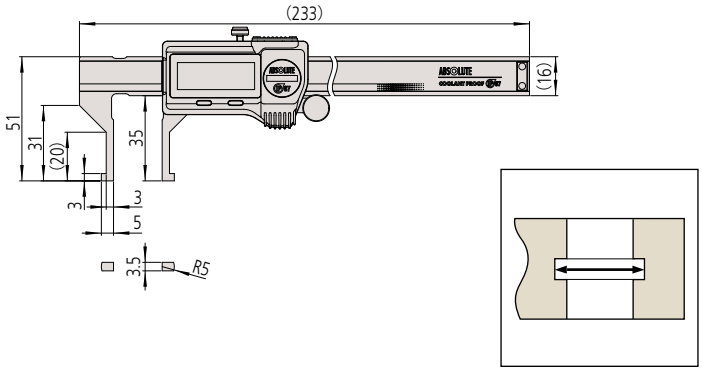

Point jaw type: 573-646-20, 573-648-20, 573-746-20

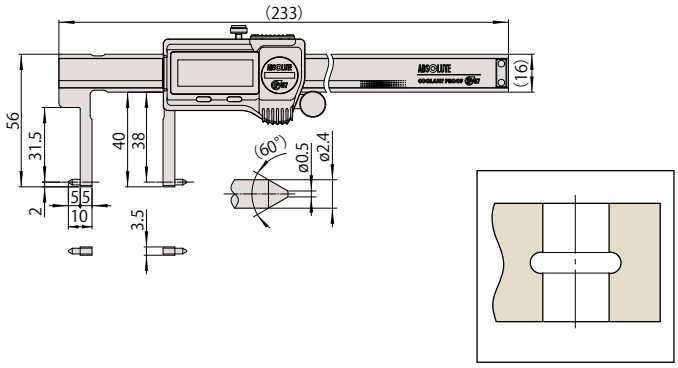

D

Mitutoyo

Calipers

ABSOLUTE Inside Caliper
SERIES 536 — Knife-edge/Inside Groove/Point Jaw Type

- Specially designed for inside measurement. Select the right model for your workpiece shape.

Knife-edge type

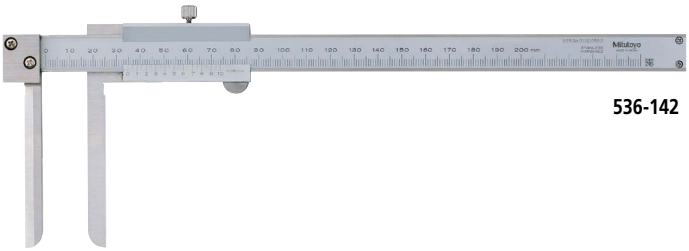

536-142

Inside groove type

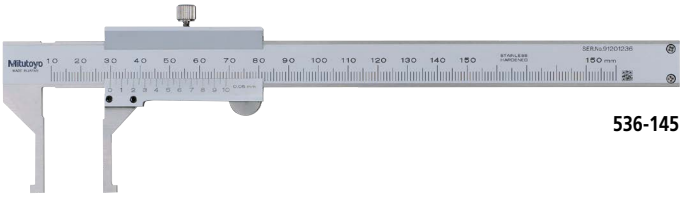

536-145

Point jaw type

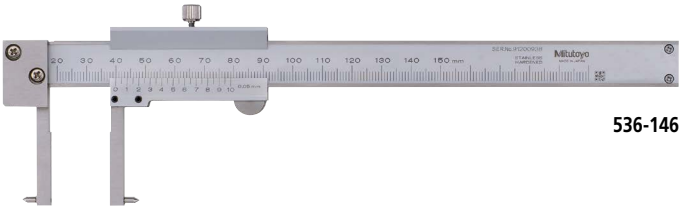

536-146

SPECIFICATIONS

Metric Analog model

Order No.	Range (mm)	Graduation (mm)	Accuracy (mm)*	Remarks
536-142	10 - 200	0.05	±0.12	Knife-edge type, Measurable min.
536-145	10.1 - 150		±0.05	Inside groove type, Measurable min.
536-146	20.1 - 150			Point jaw type, Measurable min.
536-147	30.1 - 300		±0.08	Point jaw type, Measurable min.
536-148	70.1 - 450		±0.10	Point jaw type, Measurable min.
536-149	70.1 - 600		±0.12	Point jaw type, Measurable min.

* E_{MPE} (ISO 13385-1:2019 and ASME B89.1.14-2018). Largest value across the measuring range.

Need Service?

DIMENSIONS

Knife-edge type: 536-142

Unit: mm

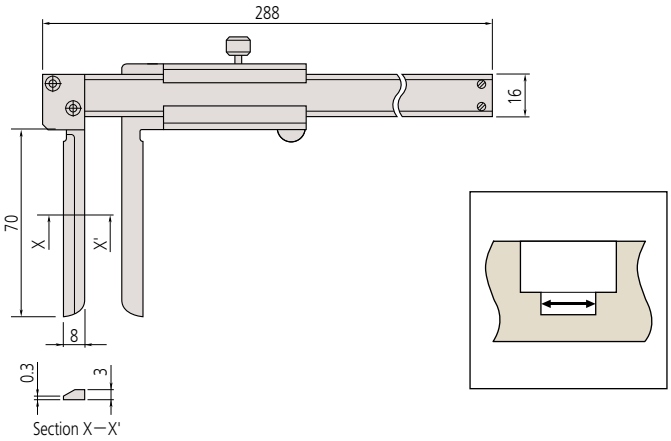

Inside groove type: 536-145

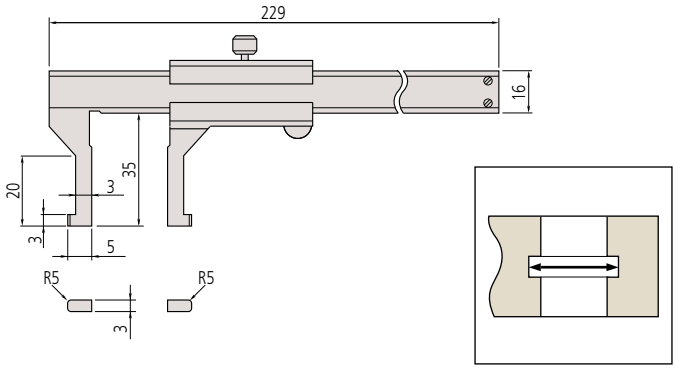

Point jaw type: 536-146, 147, 148, 149

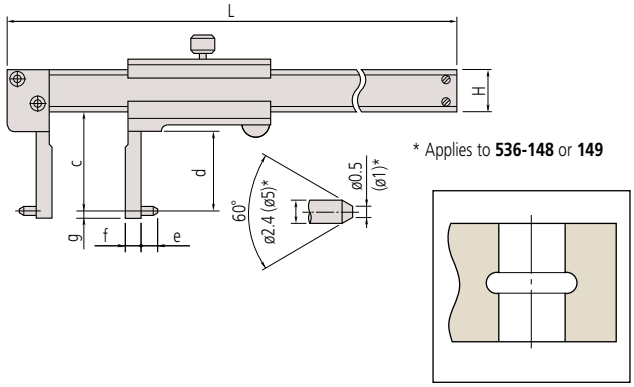

* Applies to **536-148** or **149**

Range (mm)	c	d	e	f	g	H	L
150	38	31	5	5	2	16	229
300	98	89		10		20	403
450	145	136	10	25	5	25	610
600							750

Note: Models with a measuring range of more than 300 mm have slightly different appearance. For details, contact your nearest M³ Solution Center

Calipers

Neck Caliper
SERIES 573, 536 — ABSOLUTE Digimatic and Vernier Types

- Can measure wall thickness, inside bores, and recesses.

573-651-20

SPECIFICATIONS

Inch / Metric Digimatic model

Order No.	Range	Resolution	Accuracy*
573-751-20	0 - 6 in/ 0 - 150 mm	0.0005 in/ 0.01 mm	±0.0015 in/ ±0.03 mm
573-752-20*1	0 - 6 in/ 0 - 150 mm		

Metric Digimatic model

Order No.	Range (mm)	Resolution (mm)	Accuracy (mm)*
573-651-20	0 - 150	0.01	±0.03
573-652-20*1	0 - 150		
573-653-20*2	0 - 150		
573-654-20*1*2	0 - 150		

- Power source: SR44 battery (1 pc.), **938882** included as standard (for operational checks)
- Battery life: Approx. 5 years under normal use

* E_{MPE} (ISO 13385-1:2019 and ASME B89.1.14-2018). Largest value across the measuring range.
*1 Point jaw type
*2 Without thumb roller

DIMENSIONS

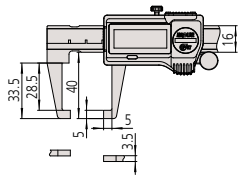

573-651-20, 573-653-20*, 573-751-20
* Without thumb roller
Jaw thickness: 3.5 mm

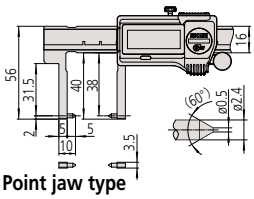

Point jaw type
573-652-20, 573-654-20*, 573-752-20
* Without thumb roller

Unit: mm

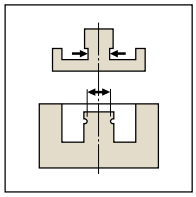

Point jaw type

536-152

SPECIFICATIONS

Metric Analog model

Order No.	Range (mm)	Graduation (mm)	Accuracy (mm)*
536-151	0 - 150	0.05	±0.05
536-152*1			

*E_{MPE} (ISO 13385-1:2019 and ASME B89.1.14-2018). Largest value across the measuring range.
*1 Point jaw type

DIMENSIONS

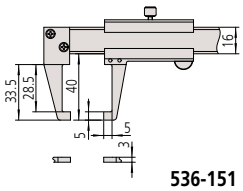

536-151

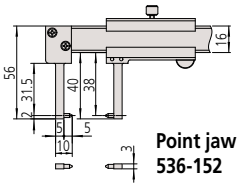

Point jaw type
536-152

Unit: mm

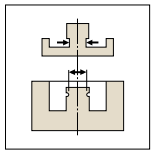

MeasurLink ENABLED Data Management Software by Mitutoyo
U-WAVE fit
ABSOLUTE™
TÜVRheinland CERTIFIED — Dust- and Water-Protected — www.tuv.com ID 0000045042
IP67

Measurement Example

Optional Output Devices

Order No.	Description
Wired	
264-020	USB Input tool (**IT-020U**)
- 05CZA624	Connecting Cable (**1m**)
- 05CZA625	Connecting Cable (**2m**)
06AFM380A	USB Input Tool Direct (**2m**)
Wireless	
264-620	Transmitter (**IP67**)
264-624	Transmitter (**IP67, Bluetooth**)
264-621	Transmitter (**Buzzer**)
264-625	Transmitter (**Buzzer, Bluetooth**)
- 02AZF310	Connecting Unit (**Adapter**)
- 02AZE140A	Connecting Cable (**foot switch compatible**)

Note: Model uses connector type "A"

Need Calibration?

MeasurLink ENABLED
Data Management Software by Mitutoyo
U-WAVE fit
ABSOLUTE™
TÜVRheinland CERTIFIED
Dust- and Water-Protected
www.tuv.com ID 0000045042
IP67

Measurement Example

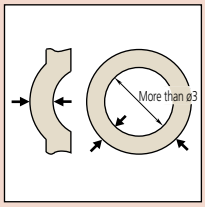

Optional Output Devices

Order No.	Description
Wired	
264-020	USB Input tool (**IT-020U**)
- 05CZA624	Connecting Cable (**1m**)
- 05CZA625	Connecting Cable (**2m**)
06AFM380A	USB Input Tool Direct (**2m**)
Wireless	
264-620	Transmitter (**IP67**)
264-624	Transmitter (**IP67, Bluetooth**)
264-621	Transmitter (**Buzzer**)
264-625	Transmitter (**Buzzer, Bluetooth**)
- 02AZF310	Connecting Unit (**Adapter**)
- 02AZE140A	Connecting Cable (**foot switch compatible**)

Note: Model uses connector type "A"

Tube Thickness Caliper
SERIES 573, 536 — ABSOLUTE Digimatic and Vernier Types

- The beam-mounted jaw is a round bar that facilitates measurements of tube wall thickness.
- Data output function allows integration into statistical process control and measurement systems. (Refer to section A).

573-761-20

SPECIFICATIONS

Inch / Metric Digimatic model

Order No.	Range	Resolution	Accuracy*
573-761-20	0 - 6 in/ 0 - 150 mm	0.0005 in/ 0.01 mm	±0.002 in/ ±0.05 mm

Metric Digimatic model

Order No.	Range (mm)	Resolution (mm)	Accuracy (mm)*
573-661-20	0 - 150	0.01	±0.05
573-662-20*1	0 - 150		

- Power source: SR44 battery (1 pc.), **938882** included as standard (for operational checks)
- Battery life: Approx. 5 years under normal use

* E_{MPE} (ISO 13385-1:2019 and ASME B89.1.14-2018). Largest value across the measuring range.
*1 Without thumb roller

DIMENSIONS

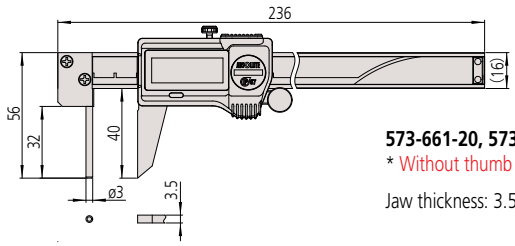

Unit: mm

573-661-20, 573-662-20*, 573-761-20
* Without thumb roller

Jaw thickness: 3.5 mm

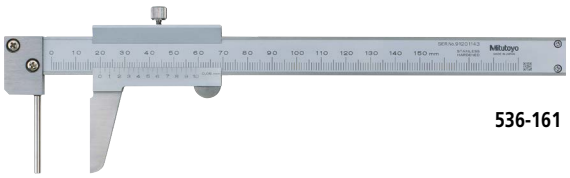

536-161

SPECIFICATIONS

Metric Analog model

Order No.	Range (mm)	Graduation (mm)	Accuracy (mm)*
536-161	0 - 150	0.05	±0.05

* E_{MPE} (ISO 13385-1:2019 and ASME B89.1.14-2018). Largest value across the measuring range.

DIMENSIONS

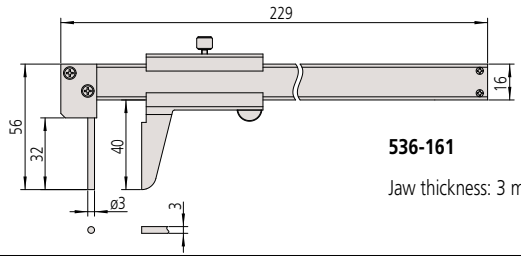

Unit: mm

536-161

Jaw thickness: 3 mm

D

Mitutoyo

Calipers

Hook Type Vernier Caliper SERIES 536

- Can measure width of grooves and lands inside bores and recesses.
- **536-172** is equipped with a fine-adjustment wheel to enable precise feed and adjustment.

536-171

Inside-groove type

536-172

Measurement Example

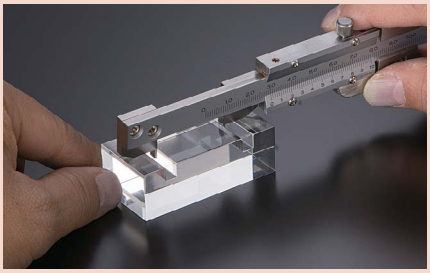

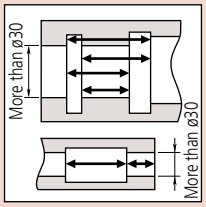

SPECIFICATIONS

Metric

Order No.	Range (mm)*1	Graduation (mm)	Accuracy (mm)*	Remarks
536-171	0 - 200 (10.1 - 200)	0.02	±0.03	—
536-172	0 - 200 (2.1 - 200)			with fine adjustment

* E_{MPE} (ISO 13385-1:2019 and ASME B89.1.14-2018). Largest value across the measuring range.
*1 ( ): Dimension in inside measurement

DIMENSIONS

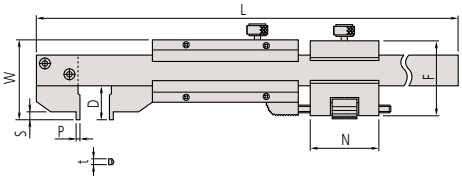

Unit: mm

Order No.	D	F	L	N	P	S	t	W
536-171*1	12	—	320	—	5	4	3.5	28
536-172*2		28.5		20	1			

*1 Inside measuring face is R5.
*2 Inside measuring face is flat.

Swivel Vernier Caliper SERIES 536 — Moving/Swivel Jaw Type

- The moving jaw can be rotated to measure sectioned shafts.
- Can measure outside and inside dimensions, depth, and steps.

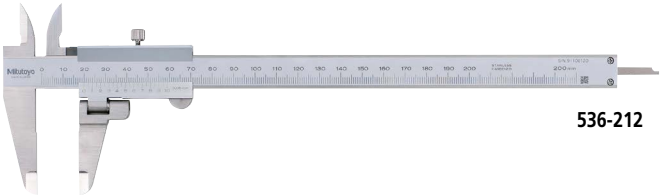

536-212

Measurement Example

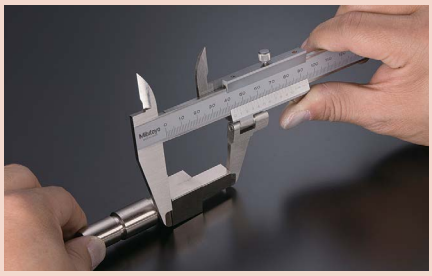

SPECIFICATIONS

Metric

Order No.	Range (mm)	Graduation (mm)	Accuracy (mm)*	Remarks
536-212	0 - 200	0.05	±0.05	with depth bar

* E_{MPE} (ISO 13385-1:2019 and ASME B89.1.14-2018). Largest value across the measuring range.

DIMENSIONS

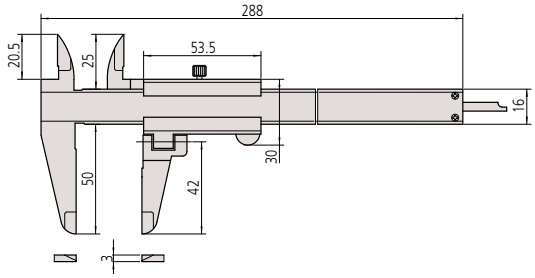

Unit: mm

Find a Distributor

Measurement Example

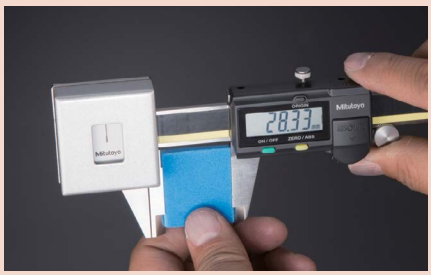

Technical Explanation

Measurement procedure

A consistently low measuring force can be guaranteed by only taking measurements when the pointer is between the two fiducial lines.

Optional Output Devices

Order No.	Description
Wired	
264-020	USB Input tool (**IT-020U**)
- 959149	Connecting Cable (**1m**)
- 959150	Connecting Cable (**2m**)
06AFM380C	USB Input Tool Direct (**2m**)
Wireless	
264-620	Transmitter (**IP67**)
264-624	Transmitter (**IP67, Bluetooth**)
264-621	Transmitter (**Buzzer**)
264-625	Transmitter (**Buzzer, Bluetooth**)
- 02AZF300	Connecting Unit (**Adapter**)
- 02AZE140C	Connecting Cable (**foot switch compatible**)

Note: Model uses connector type "C"

ABSOLUTE Low Force Caliper SERIES 573

- Due to the low measuring force, this caliper is ideal for measuring elastic workpieces such as plastic and rubber parts.
- Easily allows fine feeding by using the thumb roller.
- Measuring force: 0.5 N to 1.0 N

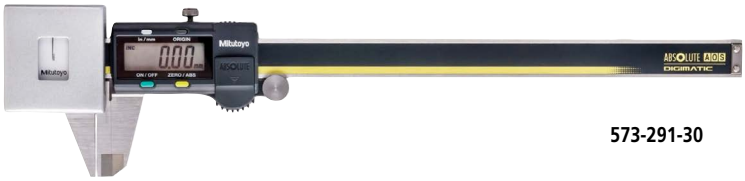

573-291-30

D

SPECIFICATIONS

Inch / Metric

Order No.	Range	Resolution	Accuracy*
573-291-30	0 - 7 in/0 - 180 mm	0.0005 in/0.01 mm	±0.002 in/±0.05 mm

Metric

Order No.	Range (mm)	Resolution (mm)	Accuracy (mm)*
573-191-30	0 - 180	0.01	±0.05

- Power source: SR44 battery (1 pc.), **938882** included as standard (for operational checks)

* E_{MPE} (ISO 13385-1:2019 and ASME B89.1.14-2018). Largest value across the measuring range.
Note: Dedicated for outside measurement (depth bar is not fitted).

DIMENSIONS

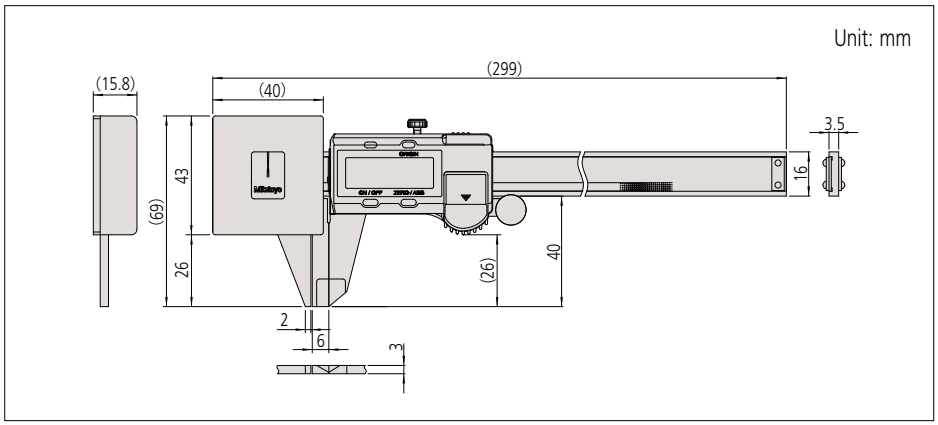

Calipers

MeasurLink® ENABLED
Data Management Software by Mitutoyo

ABSOLUTE™

ABSOLUTE Snap Caliper SERIES 573

- Features a 'snap action' movement control of the slider via a spring-loaded mechanism attached to a movable clamp on the beam.
- Enables quick and efficient repetitive Go/No-go inspection of a specific dimension on mass-produced parts by just moving a lever.
- The slider can be retracted by up to 2 mm from the measuring position.
- Measuring force: 7 to 14 N.

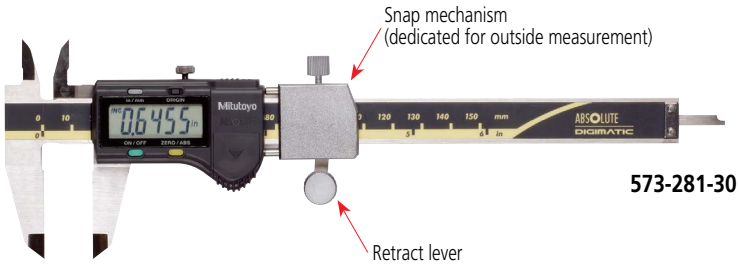

573-281-30

Measurement Example

Optional Output Devices

Order No.	Description
Wired	
264-020	USB Input tool (**IT-020U**)
- 959149	Connecting Cable (**1m**)
- 959150	Connecting Cable (**2m**)
06AFM380C	USB Input Tool Direct (**2m**)
Wireless	
264-620	Transmitter (**IP67**)
264-624	Transmitter (**IP67, Bluetooth**)
264-621	Transmitter (**Buzzer**)
264-625	Transmitter (**Buzzer, Bluetooth**)
- 02AZD790C	Connecting Cable
- 02AZE140C	Connecting Cable (**foot switch compatible**)

Note: Model uses connector type "C"

SPECIFICATIONS

Inch / Metric

Order No.	Range	Resolution	Accuracy*
573-281-30	0 - 4 in/0 - 100 mm	0.0005 in/0.01 mm	±0.001 in/±0.02 mm
573-282-30	0 - 6 in/0 - 150 mm		

Metric

Order No.	Range (mm)	Resolution (mm)	Accuracy (mm)*
573-181-30	0 - 100	0.01	±0.02
573-182-30	0 - 150		

- Power source: SR44 battery (1 pc.), **938882** included as standard (for operational checks)

* E_{MPE} (ISO 13385-1:2019 and ASME B89.1.14-2018). Largest value across the measuring range.

DIMENSIONS

Unit: mm

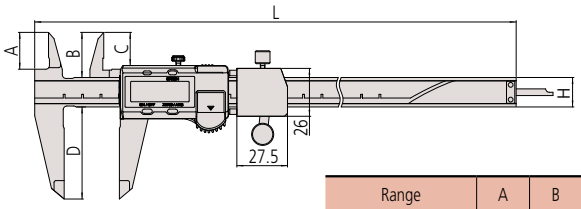

Thickness of outer jaw: 3.5 mm

Range	A	B	C	D	H	L
0 - 100 mm/0 - 4 in	16.5	21	14.5	40	16	233
0 - 150 mm/0 - 6 in	20	24.5	18	50		290

Got Questions?

Scribing Caliper
SERIES 573, 536 — ABSOLUTE Digimatic and Vernier Type

- The carbide-tipped jaws facilitate fine scribing on workpiece.
- With depth bar.
- With SPC data output. (Series 573)
- Supplied in fitted plastic case.

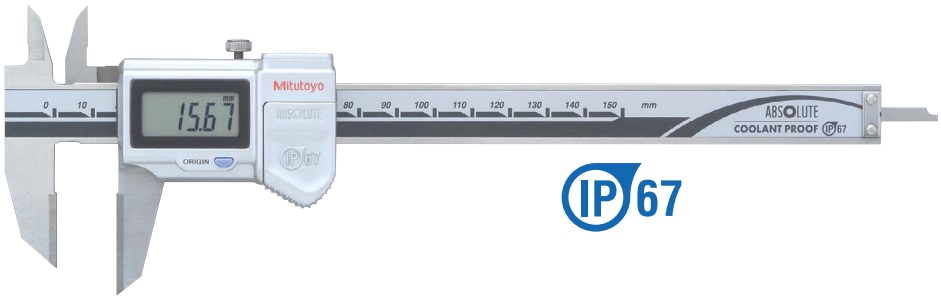

Function
Origin-set, Zero-setting, Power On/Off, Data output, inch/mm conversion (on inch/metric models only)
Alarm: Low voltage, Counting value composition error

Optional Output Devices

Order No.	Description
Wired	
264-020	USB Input tool (**IT-020U**)
- 05CZA624	Connecting Cable (**1m**)
- 05CZA625	Connecting Cable (**2m**)
06AFM380A	USB Input Tool Direct (**2m**)
Wireless	
264-620	Transmitter (**IP67**)
264-624	Transmitter (**IP67, Bluetooth**)
264-621	Transmitter (**Buzzer**)
264-625	Transmitter (**Buzzer, Bluetooth**)
- 02AZF310	Connecting Unit (**Adapter**)
- 02AZE140A	Connecting Cable (**foot switch compatible**)

Note: Model uses connector type "A"

SPECIFICATIONS

Metric Digital model

Order No.	Range	Accuracy*	Resolution	Mass (g)
573-676-20	0 - 150mm	±0.02mm	0.01mm	166
573-677-20	0 - 200mm	±0.02mm	0.01mm	196
573-679	0 - 300mm	±0.03mm	0.01mm	345

- Power source: SR44 battery (1 pc.), **938882** included as standard (for operational checks)
- Battery life: Approx. 5 years under normal use

* E_{MPE} (ISO 13385-1:2019 and ASME B89.1.14-2018). Largest value across the measuring range. See page D-46 for MPE table.

Metric Vernier type

Order No.	Range	Accuracy*	Graduation	Mass (g)
536-221	0 - 150mm	±0.05mm	0.05mm	150
536-222	0 - 200mm	±0.05mm	0.05mm	180
536-223	0 - 300mm	±0.08mm	0.05mm	355

* E_{MPE} (ISO 13385-1:2019 and ASME B89.1.14-2018). Largest value across the measuring range. See page D-46 for MPE table.

DIMENSIONS

Unit: mm

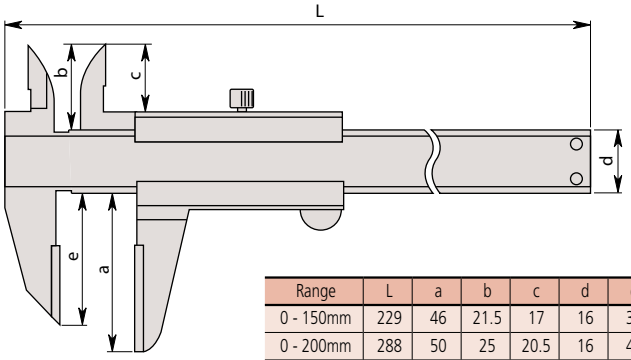

Range	L	a	b	c	d	e
0 - 150mm	229	46	21.5	17	16	33
0 - 200mm	288	50	25	20.5	16	43
0 - 300mm	403	64	27.5	22	20	54

Center Line Gage

Optional Accessories for Calipers

- Pairs of conical probes are specially designed for Digimatic, Dial and Vernier calipers to quickly measure centerline distances.

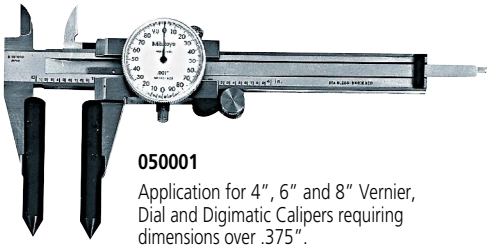

050001
Application for 4", 6" and 8" Vernier, Dial and Digimatic Calipers requiring dimensions over .375".

050018
Application for 12" Vernier, Dial and Digimatic Calipers requiring dimensions over .5".

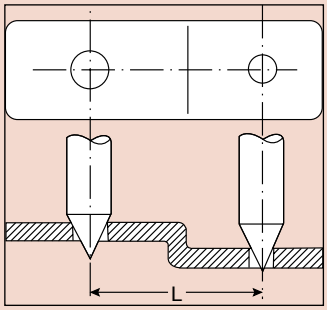

D

SPECIFICATIONS

Center Line Gage

Order No.	Description
050001	For 4, 6 and 8" Calipers
050018	For 12" Calipers

DIMENSIONS

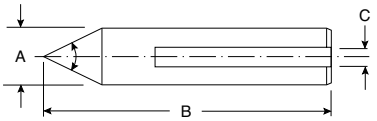

	A	B	C
050001	.375"	2.187"	.141"
050018	.500"	2.75"	.154"

Depth Base Attachment

Optional Accessories for Caliper

- For 4", 6", 8", 12" / 100mm, 150mm, 200mm, 300mm, Vernier, Dial and Digital Calipers which have a depth measuring bar.
- Finely grounded base surface and secure locking clamp.

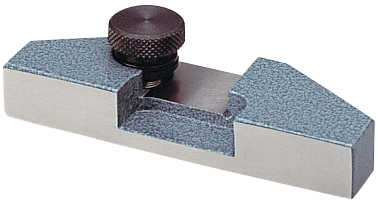

050084-10

SPECIFICATIONS

Inch / Metric

Size	Order No.	Remarks (applicable measuring range of caliper)
3" / 75mm	**050083-10**	4", 6", 8" / 100mm, 150mm, 200mm
4" / 100mm	**050084-10**	4", 6", 8" / 100mm, 150mm, 200mm
5" / 125mm	**050085-10**	12" / 300mm

DIMENSIONS

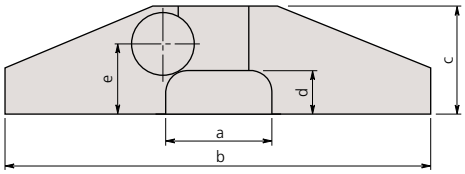

Unit: mm

Size	a	b	c	d	e	t
3" / 75mm	25	75	26.5	13	18.5	12
4" / 100mm	25	100	26.5	13	18.5	12
5" / 125mm	30	125	28.5	13	20	14

t: Base thickness

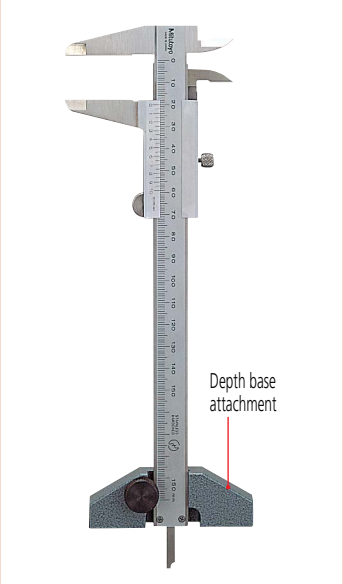

Appendix: List of Maximum Permissible Errors (MPE)

*L = Measured Length (not measuring range)
*E*mpe & Smpe are in accordance w/ (ISO 13385-1:2019 and ASME B89.1.14-2018)

500 Series

*L (inch)	E_{MPE} (inch)	S_{MPE} (inch)
0 ≤ L ≤ 8	±0.0010	±0.0020
8 < L ≤ 16	±0.0015	±0.0025
16 < L ≤ 24	±0.0020	±0.0030
24 < L ≤ 32	±0.0025	±0.0035
32 < L ≤ 40	±0.0030	±0.0040

*L (mm)	E_{MPE} (mm)	S_{MPE} (mm)
0 ≤ L ≤ 200	±0.02	±0.04
200 < L ≤ 300	±0.03	±0.05
300 < L ≤ 400	±0.04	±0.06
400 < L ≤ 600	±0.05	±0.07
600 < L ≤ 800	±0.06	±0.08
800 < L ≤ 1000	±0.07	±0.09

505 Series

*L (inch)	E_{MPE} (inch)	S_{MPE} (inch)
0 ≤ L ≤ 6	±0.0010	±0.0020
6 < L ≤ 12	±0.0020	±0.0025

0.01 mm Grad. 0.02 mm Grad.

*L (mm)	*L (mm)	E_{MPE} (mm)	S_{MPE} (mm)
0 ≤ L ≤ 150	0 ≤ L ≤ 50	±0.02	±0.04
150 < L ≤ 200	50 < L ≤ 200	±0.03	±0.05
	200 < L ≤ 300	±0.04	±0.06

530 Series & 531 Series

0.05 mm Grad.

*L (mm)	E_{MPE} (mm)	S_{MPE} (mm)
0 ≤ L ≤ 200	±0.05	±0.07
200 < L ≤ 300	±0.08	±0.10
300 < L ≤ 400	±0.09	±0.11
400 < L ≤ 600	±0.010	±0.12
600 < L ≤ 700	±0.012	±0.14
700 < L ≤ 800	±0.013	±0.15
800 < L ≤ 900	±0.014	±0.16
900 < L ≤ 1000	±0.015	±0.17

1/128 in / 0.05 mm Grad.

*L (inch)	E_{MPE} (inch)	S_{MPE} (inch)
0 ≤ L ≤ 12	±0.5/128	±0.5/128

*L (mm)	E_{MPE} (mm)	S_{MPE} (mm)
0 ≤ L ≤ 200	±0.05	±0.07
200 < L ≤ 300	±0.08	±0.10

0.001 in / 0.02 mm Grad.

*L (inch)	E_{MPE} (inch)	S_{MPE} (inch)
0 ≤ L ≤ 8	±0.0010	±0.0020
8 < L ≤ 12	±0.0015	±0.0025

0.02 mm Grad.

*L (mm)	E_{MPE} (mm)	S_{MPE} (mm)
0 ≤ L ≤ 50	±0.02	±0.04
50 < L ≤ 200	±0.03	±0.05
200 < L ≤ 300	±0.04	±0.06

532 Series

*L (inch)	E_{MPE} (inch)	S_{MPE} (inch)
0 ≤ L ≤ 8	±0.0010	±0.0020
8 < L ≤ 12	±0.0015	±0.0025

*L (mm)	E_{MPE} (mm)	S_{MPE} (mm)
0 ≤ L ≤ 50	±0.02	±0.04
50 < L ≤ 200	±0.03	±0.05
200 < L ≤ 300	±0.04	±0.06

Mitutoyo

Appendix: List of Maximum Permissible Errors (MPE)

*L = Measured Length (not measuring range)
*E*mpe & Smpe are in accordance w/ (ISO 13385-1:2019 and ASME B89.1.14-2018)

552 Series

*L (inch)		E_{MPE} (inch)	S_{MPE} (inch)
Standard*1	Long*1		
0 ≤ L ≤ 40	-	±0.0020	±0.0020
-	0 ≤ L ≤ 24	±0.0025	±0.0025
40 < L ≤ 52	24 < L ≤ 40	±0.0030	±0.0030
52 < L ≤ 60	40 < L ≤ 48	±0.0040	±0.0040
60 < L ≤ 68	48 < L ≤ 60	±0.0045	±0.0045
68 < L ≤ 80	60 < L ≤ 68	±0.0050	±0.0050
-	68 < L ≤ 80	±0.0055	±0.0055

*1: Jaw Type

552 Series

*L (mm)		E_{MPE} (mm)	S_{MPE} (mm)
Standard*1	Long*1		
0 ≤ L ≤ 800	-	±0.04	±0.04
800 < L ≤ 1000	-	±0.05	±0.05
-	0 ≤ L ≤ 800	±0.06	±0.06
1000 < L ≤ 1300	800 < L ≤ 1200	±0.07	±0.07
1300 < L ≤ 1500	-	±0.09	±0.09
1500 < L ≤ 1700	-	±0.10	±0.10
-	1200 < L ≤ 1500	±0.11	±0.11
1700 < L ≤ 2000	1500 < L ≤ 1700	±0.12	±0.12
-	1700 < L ≤ 2000	±0.14	±0.14

550 / 551 Series

*L (inch)	E_{MPE} (inch)	S_{MPE} (inch)
0 ≤ L ≤ 2*1	±0.0010	±0.0010
0(2*1) < L ≤ 8	±0.0015	±0.0015
8 < L ≤ 24	±0.0020	±0.0020
24 < L ≤ 32	±0.0025	±0.0025
32 < L ≤ 40	±0.0030	±0.0030

*1: Coolant Proof Type Only

*L (mm)	E_{MPE} (mm)	S_{MPE} (mm)
0 ≤ L ≤ 50*1	±0.02	±0.02
0(50*1) < L ≤ 200	±0.03	±0.03
200 < L ≤ 400	±0.04	±0.04
400 < L ≤ 600	±0.05	±0.05
600 < L ≤ 800	±0.06	±0.06
800 < L ≤ 1000	±0.07	±0.07

536 Series (Point Jaw (OD) Type)

*L (mm)	E_{MPE} (mm)	S_{MPE} (mm)
0 ≤ L ≤ 200	-	±0.05
200 < L ≤ 300	-	±0.08
300 < L ≤ 450	-	±0.010
450 < L ≤ 600	-	±0.012

536 Series (Swivel Jaw Type, Point Jaw (ID) Type, Offset Type, Blade Type , Scribing Type)

*L (mm)	E_{MPE} (mm)	S_{MPE} (mm)
0 ≤ L ≤ 200	±0.05	±0.07
200 < L ≤ 300	±0.08	±0.10

536 Series (Offset Centerline Type)

*L (mm)	E_{MPE} (mm)	S_{MPE} (mm)
0 ≤ L ≤ 200	-	±0.05
200 < L ≤ 300	-	±0.08

573 Series (Back Jaw Type)

*L (mm)	E_{MPE} (mm)	S_{MPE} (mm)
0 ≤ L ≤ 200	-	±0.10
200 < L ≤ 300	-	±0.15

573 Series (Offset Type, Point Type, Blade Type, Scribing Type)

*L (inch)	E_{MPE} (inch)	S_{MPE} (inch)
0 ≤ L ≤ 8	±0.0010	±0.0020
8 < L ≤ 12	±0.0015	±0.0025

*L (mm)	E_{MPE} (mm)	S_{MPE} (mm)
0 ≤ L ≤ 200	±0.02	±0.04
200 < L ≤ 300	±0.03	±0.05

573 Series (Offset Centerline Type)

*L (inch)	E_{MPE} (inch)	S_{MPE} (inch)
0 ≤ L ≤ 12	-	±0.0015

*L (mm)	E_{MPE} (mm)	S_{MPE} (mm)
0 ≤ L ≤ 200	-	±0.03
200 < L ≤ 300	-	±0.04

160 Series (Vernier Caliper)

0.05 mm Grad.

*L (mm)	E_{MPE} (mm)	S_{MPE} (mm)
0 ≤ L ≤ 200	±0.05	±0.05
200 < L ≤ 300	±0.08	±0.08
300 < L ≤ 400	±0.09	±0.09
400 < L ≤ 600	±0.010	±0.10
600 < L ≤ 700	±0.012	±0.12
700 < L ≤ 800	±0.013	±0.13
800 < L ≤ 900	±0.014	±0.14
900 < L ≤ 1000	±0.015	±0.15

0.001 in / 0.02 mm Grad.

*L (inch)	E_{MPE} (inch)	S_{MPE} (inch)
0 ≤ L ≤ 8	±0.0010	±0.0010
8 < L ≤ 16	±0.0015	±0.0015
16 < L ≤ 28	±0.0020	±0.0020
24 < L ≤ 36	±0.0030	±0.0030
32 < L ≤ 40	±0.0035	±0.0035

0.02 mm Grad.

*L (mm)	E_{MPE} (mm)	S_{MPE} (mm)
0 ≤ L ≤ 50	±0.02	±0.02
50 < L ≤ 200	±0.03	±0.03
200 < L ≤ 400	±0.04	±0.04
400 < L ≤ 600	±0.05	±0.05
600 < L ≤ 800	±0.06	±0.06
800 < L ≤ 1000	±0.07	±0.07

Accuracy Notation Change (Regarding MPE notation)

The "instrumental error" used until now will change to "MPE (E_{MPE}/ S_{MPE})". Scale Shift Error (S_{MPE}) will describe the permissible error including those for depth and step.(**Table 4**)

Standards	E_{MPE}	S_{MPE}			
	Outside measurement	Inside measurement	Depth measurement	Step measurement	I.D. measurement
ISO13385-1:2019	Accuracy notation for outside measurement	Permissible values including those for all measurements: inside, depth, step, etc.			

Maximum permissible error includes the repeatability and quantizing error.

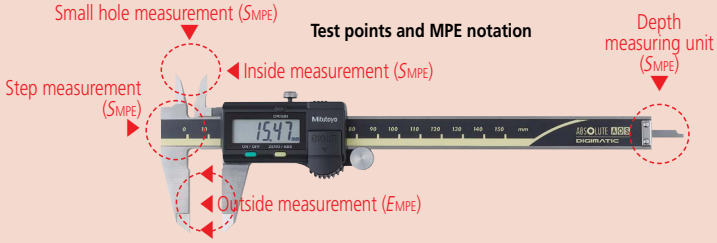

Accuracy Notation Change (For Custom Products)

The ISO13385-1 standard stipulates the accuracy notation for compliant products. However, nothing is stipulated for custom products that are not compliant with said standard (such as calipers with dedicated measuring faces), so for these products the notation of accuracy is left to the discretion of each manufacturer. Mitutoyo, with many custom calipers, describes MPE for all of its calipers based on the following line of thinking. For example, MPE is "Scale Shift Error (S_{MPE})" for "calipers whose measuring face is other than the zero-setting face = calipers with exclusive measuring method" such as centerline calipers, inside calipers, etc. (**Fig. 5, Table 7**)

Accuracy is described using S_{MPE} measured not using the number of test points stipulated in the ISO13385-1 standard, but rather with the same number of test points and testing method as before.

(**Fig. 5**) Non-ISO model (Ex.)

573-605-20

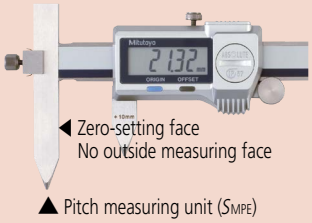

(**Table 7-1**)

Maximum permissible error (MPE)	
E_{MPE} (mm)	S_{MPE} (mm)
—	±0.04

Number of test points: 3

573-646-20

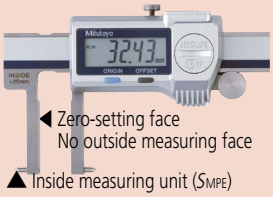

(**Table 7-2**)

Maximum permissible error (MPE)	
E_{MPE} (mm)	S_{MPE} (mm)
—	±0.03

Number of test points: 3

D

Featured Products

Linear Height

High-Performance, Motorized 1D / 2D Measurement Height Gage

Refer to page D-51 for details.

QM-Height

High-Performance Height Gage

Refer to page D-53 for details.

HDS Height Gage

570 Series Single Beam Height Gage

Refer to page D-57 for details.

D

Height Gages

INDEX

High-precision Height Gage

Linear Height	D-51,52
QM-Height	D-53,54

Digimatic Height Gage

Digimatic Height Gage (Multi-function Type with SPC Data Output)	D-55,56
ABSOLUTE Digimatic Height Gage with Ergonomic Base	D-57
ABSOLUTE Digimatic Height Gage (Standard Model)	D-58

Height Gage

Vernier Height Gage	D-59,60
Dial Height Gage	D-61

Accessories, Options

Height Gage (Optional Accessories for Height Gages)	D-62,63
CERA Caliper Checker	D-64

MeasurLink® ENABLED
Data Management Software by Mitutoyo

Measurement Data Network System

MeasurLink® is a measurement data management system based on databases (SQL Server). You can build a network to manage the measurement results and measuring instruments simply by combining the required functions.

MeasurLink® is a registered trademark of Mitutoyo Corporation in Japan and Mitutoyo America Corporation in the United States.

PROPRIETARY INSPECTION CERTIFICATE

Measuring Instruments Shipped with Inspection Certificate

Mitutoyo guarantees product quality as a leading precision measuring instrument manufacturer and ships measuring instruments with an inspection certificate that includes inspection data so that customers can use them with confidence.

ABSOLUTE™

ABSOLUTE Linear Encoder

Mitutoyo developed the unique ABSOLUTE method to retain position information after the power is turned off.
The origin is set once - thereafter the live position is displayed when the power is turned on.

Mitutoyo

Height Gage

Linear Height
SERIES 518 — High-performance 2D Measurement System

- This is a precision height gage featuring high accuracy and outstanding ease of use. It is useful not only in height measurement but also in a wide range of applications such as inspection of moulds and precision parts.
- Easy operation using keypad and touch screen navigation allows intuitive operation that is suitable even for beginners.
- The built-in scale is dirt-resistant and can be reliably used on shop floors.
- Various interfaces are available, including connection to a printer, a PC, and our wired or wireless communication system.
- Pneumatic full/semi-floating suspension system allows adjustment of air-cushion height.
- It is easily expandable to support various types of optional probes to meet your different measurement needs.

518-361-11

D

SPECIFICATIONS

Model		LH-600F	LH-600FG
Order No.	inch/mm	**518-360-13**	**518-361-13**
Power grip		Without power grip	With power grip
Measuring range (Stroke)		0 to 977 mm (600 mm) 0 to 38 in (24 in)	
Resolution		0.0001/0.001/0.01/0.1 mm (selectable) 0.000001/0.00001/0.0001/0.001 in (selectable)	
Accuracy	Indication accuracy*1	(43+L)µin, L = Measuring length (inch) (1.1 + 0.6L/600)µm, L = Measuring length (mm)	
	Repeatability*1	Plane: 0.4 µm (2σ), Hole: 0.9 µm (2σ)	
	Perpendicularity (forward and backward)*2	5 µm	
	Straightness (forward and backward)*2	4 µm	
Driving method (speed)		Motor-driven (5, 10, 15, 20, 25, 30, 40 mm/s: 7 steps)/Manual	
Scale unit		Photoelectric incrermental encoder STVC-20Z	
Measuring force		1 N (automatic constant-force function)	
Main unit moving mode		Full-floating (moving)/Semi-floating (measuring) Air bearing (built-in compressor)	
Display unit		8.4 inch touch-screen, LCD	
Adjustment of display unit		Stepless tilt adjustment: 0 to 40° Stepless swivel adustment: -30 to 180°	
Preventive maintenance		Scale status notification, calibration schedule notification	
Probe diameter compensation		Semi-automatic compensation using the probe diameter calibration block (standard accessory) Compensation by inputting the probe diameter	
Power source		AC adapter 120V, 60 Hz/Battery (NiMH)	
Battery operation time*3		Battery powered (standard): 1-4 hours*4, powered by 2 batteries: 2-8 hours	
Battery charging time*5		Approx. 3.5 hours (can be used while charging)	
Dimensions (W×D×H)		238×492×996 mm	
Mass		26.1 kg	26.6 kg
Operating temperature/humidity ranges		5 to 40° C/20 to 80% RH (non-condensing)	
Data output		Digimatic D1/D2/S1 (bi-directional communication), RS232 (DB9)	

- Use in an environment that is as close as possible to 20° C, and subject to minimal temperature change over time.

*1: Indication accuracy and repeatability represent the values obtained when the standard ø5 stepped prove is used.
*2: Guaranteed when using the Lever Head (**519-521**), Mu-Checker (**519-562A**) SPC cable (**936937**), and Probe Mounting Stem (Dovetail) (**21CZB129**).
*3: Battery life depends on duty cycle.
*4: One battery pack (**12AAF712**) is provided as standard.
*5: When ambient temperature is 30° C or higher, the battery may not charge sufficiently.

LH Communication-Tool V1.0 software

You can easily create and save inspection reports and configure device parameters.

* Available at Mitutoyo website for free download.
* To connect to a PC, use a USB cable (type A-B).

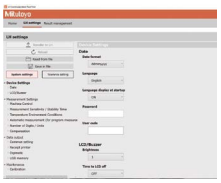

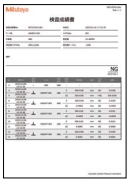

Adjustable to Easy-to-See Angle

Measurement Guidance

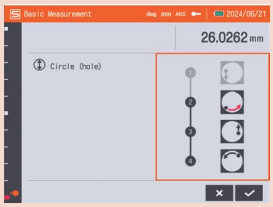

Intuitive operation with guidance.

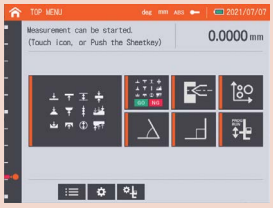

Home Screen
Measurement menu display is easy to understand visually. The guidance makes it easy for first-time users to operate the system.

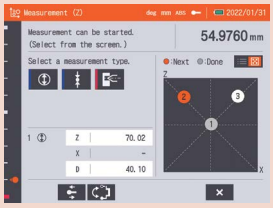

2D Measurement- Pre-Placement
This function allows the user to register the hole position of the workpiece before measurement.

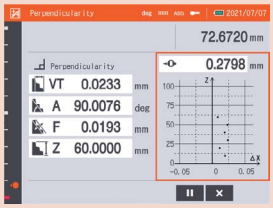

Perpendicular / Straightness Measurement- Graph Creation
You can check the measurement results of perpendicularity and straightness in real time during measurement (using optional indicator and indicator holder).

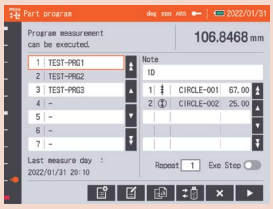

Program Measurement
You can easily create, execute, edit, and even display the results of part programs.

Optional Output Devices

Order No.	Description
Wired	
264-020	USB Input tool (**IT-020U**)
- 06AGL011	Connecting Cable (**1m**)
- 06AGL021	Connecting Cable (**2m**)
06AGQ001F	USB Input Tool Direct (**2m**)
Wireless	
264-622	Transmitter (**IP67**)
264-626	Transmitter (**IP67, Bluetooth**)
264-623	Transmitter (**Buzzer**)
264-627	Transmitter (**Buzzer, Bluetooth**)
- 02AZG011	Connecting Cable
- 02AZG021	Connecting Cable (**foot switch compatible**)
12AAJ088	Foot Switch
Other	
519-562A	Digital Mu-Checker
- 519-521	Lever Probe (**1m**)
543-700B	Digital Indicator (**12.7mm, ISO/JIS**)
543-701B	Digital Indicator (**0.5in/12.7mm, ISO/JIS**)
543-702B	Digital Indicator (**0.5in/12.7mm, ASME**)
264-506A	Mini Processor (**DP-1VA Logger**)
- 936937	Digimatic Cable (**1m**)
- 965014	Digimatic Cable (**2m**)
12AAY482	Receipt Printer
- 12AAN052	Printer Paper (**set of 10**)
- 12AAY485	Mounting Attachment
- 12AAN146	Connectin Cable
12BAF812	USB Cable (**Type A-B**) (**2m**)
-	USB Memory Device *1

*1 USB memory devices should be formatted with FAT16/32. NTFS and exFAT are not supported.

Find a Distributor

DIMENSIONS

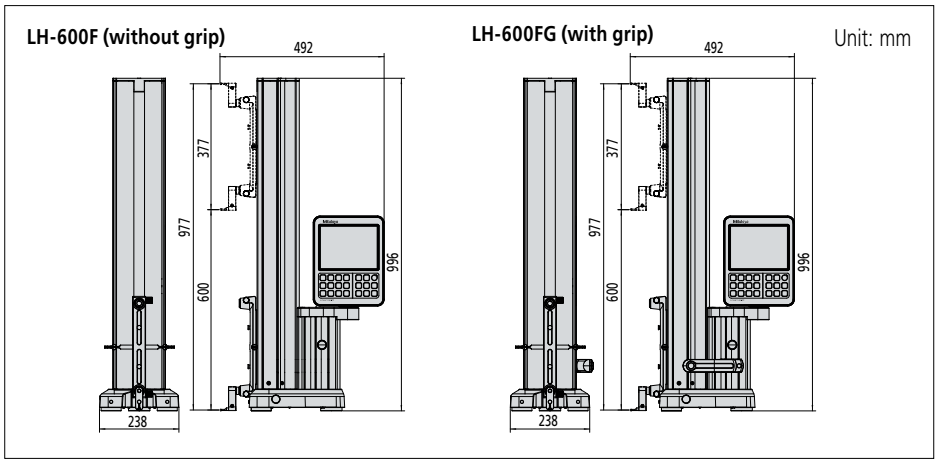

Optional Accessories

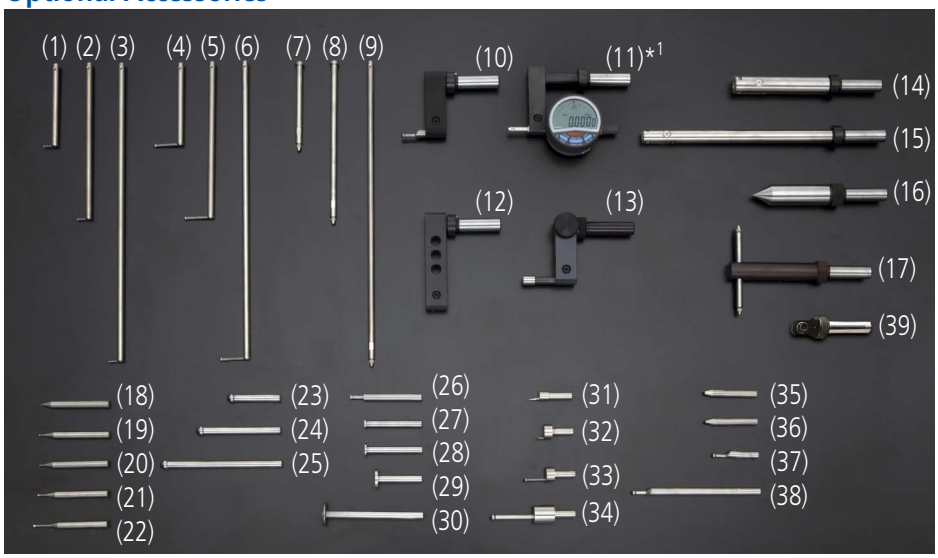

No.	Order No.	Item
(1)	**12AAY602***	Depth stylus 70 ø2 ball
(2)	**12AAY603***	Depth stylus 150 ø2 ball
(3)	**12AAY604***	Depth stylus 300 ø2 ball
(4)	**12AAY605***	Depth stylus 70 ø4 ball
(5)	**12AAY606***	Depth stylus 150 ø4 ball
(6)	**12AAY607***	Depth stylus 300 ø4 ball
(7)	**12AAY599***	Depth stylus 70
(8)	**12AAY600***	Depth stylus 150
(9)	**12AAY601***	Depth stylus 300
(10)	**12AAY343**	ø5 stepped probe (standard accessory)
(11)	**12AAA792** **12AAA837**	Dial indicator holder (mm type)*1 Dial indicator holder (inch type)*1
(12)	**12AAA793**	Probe extension holder
(13)	**12AAB136**	ø10 mm cylindrical probe
(14)	**12AAY595**	Extension holder 100
(15)	**12AAY596**	Extension holder 200
(16)	**12AAC073**	Tapered probe (ø20)
(17)	**12AAC072**	Depth probe
(18)	**12AAF666**	ø1 mm ball probe (coaxial type)
(19)	**957261**	ø2 mm ball probe (coaxial type)

No.	Order No.	Item
(20)	**12AAF667**	ø2 mm ball probe (coaxial type) Ruby ball
(21)	**957262**	ø3 mm ball probe (coaxial type)
(22)	**957263**	ø4 mm ball probe (coaxial type)
(23)	**12AAB552**	ø10 mm ball probe (coaxial type)
(24)	**12AAF668**	ø10 mm ball probe (coaxial type) L: 82 mm
(25)	**12AAF669**	ø10 mm ball probe (coaxial type) L: 120 mm
(26)	**12AAF670**	ø5 mm disk probe
(27)	**12AAF671**	ø10 mm disk probe
(28)	**957264**	ø14 mm disk probe
(29)	**957265**	ø20 mm disk probe
(30)	**12AAY598**	ø25 disk stylus
(31)	**12AAF672**	ø1 mm ball offset probe
(32)	**12AAF673**	ø2 ball stylus (eccentric type)
(33)	**12AAA788**	ø4 mm ball offset probe
(34)	**12AAA789**	ø6 mm ball offset probe
(35)	**226118**	M3 CMM stylus adapter
(36)	**226117**	M2 CMM stylus adapter
(37)	**05HAA394**	ø5 ball stylus*2
(38)	**12AAY597**	ø5 ball stylus L130
(39)	**21CZB129**	Lever probe mounting stem
	K650986	Small Styli Kit
	12AAF712	Additional battery pack
	12AAA879	Acrylic Demo Block

* Probe Extension Holder needed.
*1 A indicator is not included.
*2 The stylus is attached to ø5 stepped probe (**12AAY343**) and provided as standard.
Note 1: A gage block may be required for zero-setting depending on the probe and contact point.
Note 2: Refer to the **Linear Height LH-600F** Brochure (**2341(1)**) for more details.

Height Gage

QM-Height
SERIES 518 — High-Performance Height Gage

- This highly precise height gage is useful not only in height measurements but also in a wide range of applications such as measurement of steps, inside and outside diameters, and runouts.
- Easy-to-view, simple control panel enables most measurements to be made with a single keystroke. SPC (Digimatic) and RS-232C data output allow easy data management with a PC.
- Pneumatic floating models, which feature an air-suspension mechanism, can move smoothly on a surface plate (accuracy cannot be guaranteed for measurement while the unit is air-suspended).
- It features a long continuous operating time of approximately 1,200 hours with four AA alkaline batteries.
  (Four commercially available NiMH/HR6 rechargeable batteries can also be used.)

64PKA130D

D

SPECIFICATIONS

Order No.	Inch/Metric	64PKA094D	64PKA095D	64PKA129D	64PKA130D
Measuring range (stroke)		0 - 18 in (14 in) 0 to 465 mm (350 mm)	0 - 28 in (24 in) 0 to 715 mm (600 mm)	0 - 18 in (14 in) 0 to 465 mm (350 mm)	0 - 28 in (24 in) 0 to 715 mm (600 mm)
Resolution	Inch/Metric	0.001/0.005 mm 0.00005/0.0001/0.0002 in (Selectable)			
Accuracy	Indication accuracy*1	± (2.4 + 2.1L/600) µm			
	Repeatability*1	2 $\sigma \leq$ 1.8 µm			
Perpendicularity*2		7 µm	12 µm	7 µm	12 µm
Guiding method		Roller bearing			
Drive method		Manual (wheel)			
Measurement principle		Electromagnetic induction absolute encoder			
Measuring force		1.5±0.5 N			
Data output ports		Digimatic/USB*3			
Air-floating system		Not included		Included (for positioning only)	
Power source		Alkaline AA/LR6 batteries×4 (standard accessories)/AC adapter*4/ supports NiMH (HR6) rechargeable batteries x 4			
Battery life guidelines*5		Approx. 1,200 hours (without using the air-floating system)			
		Approx. 90 hours (when using the air-floating system)			
Mass		25 kg	29 kg	26 kg	30 kg
Dimensions (W×D×H)		Stroke 350 mm type: 280×273×784 mm Stroke 600 mm type: 280×273×1016 mm			
Operating temperature (recommended)		0 to 40° C (10 to 30° C)			
Operating humidity		20 to 80% RH (non-condensing)			
Storage temperature		-10 to 50° C			
Storage humidity		5 to 90% RH (non-condensing)			
Base Model		**518-251**	**518-253**	**518-255**	**518-257**

- Standard Accessories: **05HZA148** ø5 mm stepped probe, **12AAA715** probe diameter calibration block, alkaline batteries x 4 (AA/LR6) (For operational checks)

*1 Indication accuracy and repeatability represent the values obtained when the standard ø5 stepped probe is used.
*2 Indicates the value obtained from the measurement of a straight surface placed perpendicular to the the base reference surface using the Lever Head (**519-521**), Mu-checker (**519-562A**) and Probe Mounting Stem (Dovetail) (**21CZB129**).
*3 Requires special communication driver.
These can be downloaded from the Mitutoyo web site. **https://www.mitutoyo.co.jp/eng/contact/products/usb/index.html**
*4 The AC adapter cannot be used to recharge rechargeable batteries.
*5 Battery life depends on the operating conditions.

MeasurLink ENABLED
Data Management Software by Mitutoyo

PROPRIETARY INSPECTION CERTIFICATE

Measurement Example

- Height measurement

- ID measurement

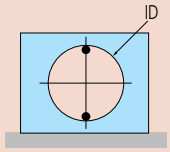

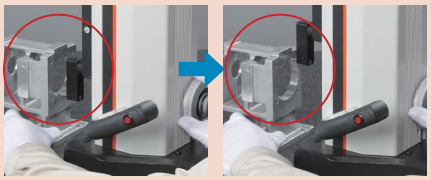

- Runout measurement

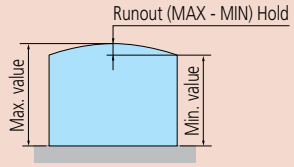

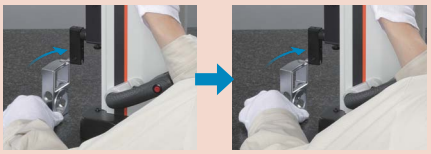

Got Questions?

DIMENSIONS

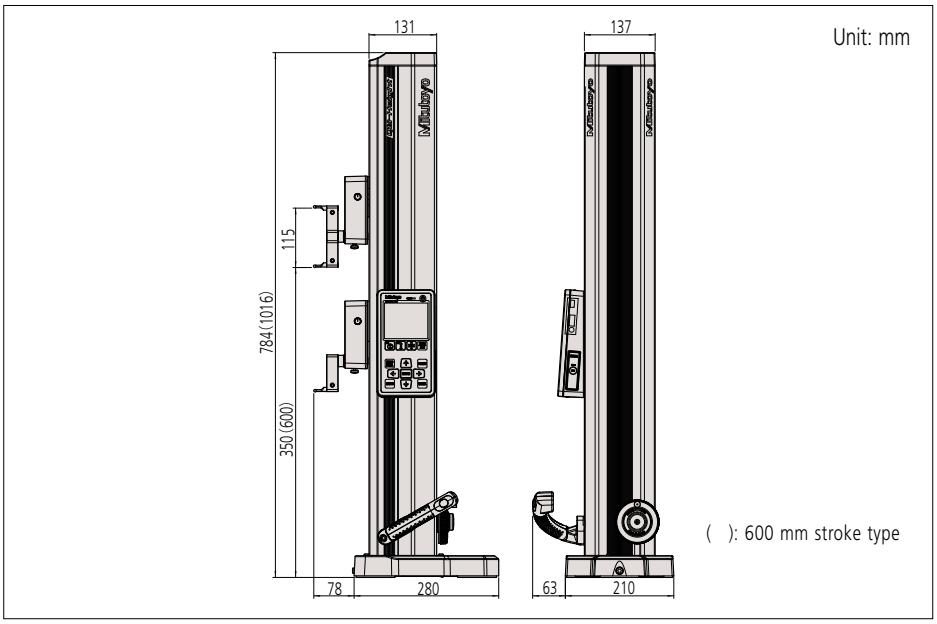

Optional Accessories

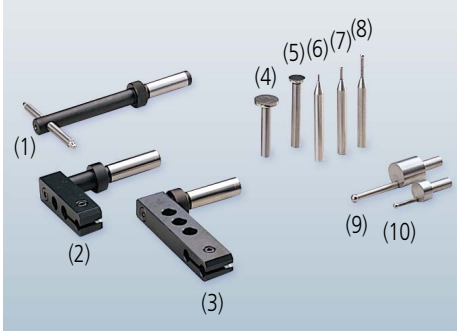

Optional Accessories that Enable Centralized Data Management

Order No.	Item name
Small printer equipped with Data Logger	
264-506A	DP-1VA Logger
- 936937	Digimatic connection cable (**1m**)
- 965014	Digimatic connection cable (**2m**)
- 06AFZ050	USB cable (**A-microB**)
Measurement Data Input Unit	
06AFM380D	USB Input Tool Direct (**2m**)
Measurement Data wireless communication system	
264-620	Transmitter (**IP67**)
264-624	Transmitter (**IP67**, **Bluetooth**)
264-621	Transmitter (**Buzzer**)
264-625	Transmitter (**Buzzer**, **Bluetooth**)
- 02AZD790D	Connecting Cable
- 02AZE140D	Connecting Cable (**foot switch compatible**)
02AZD810D	U-Wave-Receiver (**required for non-bluetooth TX**)
Software	
Refer to Pages **A-11** to **A-14**	Measurement Data Collection Software For Excel (**USB-IT PAK V2.1/V3.0**)
Refer to Pages **A-3** to **A-10**	Measurement Data Network System (**MeasurLink®**)

Contact Points for a Wide Range of Measurements

Item	Order No.	Description
	Depth probe	
(1)	**12AAC072**	Depth probe
	Special holder	
(2)	**12AAA792**	Holder for dial indicator
(3)	**12AAA793**	Holder (Long)
	Interchangeable contact points for ø5 mm stepped probe	
(4)	**957265**	ø20 mm disk
(5)	**957264**	ø14 mm disk
(6)	**957261**	ø2 mm ball (coaxial type)
(7)	**957262**	ø3 mm ball (coaxial type)
(8)	**957263**	ø4 mm ball (coaxial type)
(9)	**12AAA789**	ø6 mm ball (eccentric type)
(10)	**12AAA788**	ø4 mm ball (eccentric type)
	AC Adapter	
	06AGZ369JA	AC Adapter/U.S.
	Other	
	05HZA173	Scriber*

* Used for measurements, cannot be used for scribing.
Note: A gage block may be required for zero-setting depending on the probe or contact point to be used.

Height Gage

MeasurLink ENABLED
Data Management Software by Mitutoyo

Digimatic Height Gage
SERIES 192 — Multi-function Type with SPC Data Output

- Long reach scriber type.
- Double-column structure ensures stable measurements.
- Ergonomic base fits comfortably in the hand.
- Inclined handle improves slider ergonomics.
- Coarse and Fine feed.
- 2 Preset reference heights.
- Bidirectional touch probe (optional) for more repeatable measurements.
- Provided with a long scriber (6 in / 150 mm).
- With SPC output.

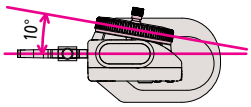

192-670-10

D

SPECIFICATIONS

Inch / Metric

Order No.	Range (in)	Resolution	Accuracy* (in)	Response speed (mm/s)	Height (mm)	Mass (kg)
192-670-10	0 - 12	0.01 mm/0.005 mm (selectable) 0.0005 in/0.0002 in (selectable)	±0.001	Approx. 500	510	5.7
192-671-10	0 - 18		±0.0015		649	7.5
192-672-10	0 - 24		±0.0015		802	8.3
192-673-10	0 - 40		±0.0025		1228	15.7

Metric

Order No.	Range (mm)	Resolution (mm)	Accuracy* (mm)	Response speed (mm/s)	Height (mm)	Mass (kg)
192-663-10	0 - 300	0.01/0.005 (selectable)	±0.02	Approx. 500	510	5.7
192-664-10	0 - 600		±0.04		802	8.3
192-665-10	0 - 1000		±0.06		1228	15.7

- Power source: SR44 battery (1 pc.), **938882** included as standard (for operational checks)
- Battery life: Approx. 3,500 hours in continuous use

* E_{MPE} (ISO 13325:2012). Largest value across the measuring range.

DIMENSIONS

192-663-10, 192-664-10, 192-670-10, 192-671-10, 192-672-10
( ): **192-664-10, 192-672-10**

192-665-10, 192-673-10

Unit: mm

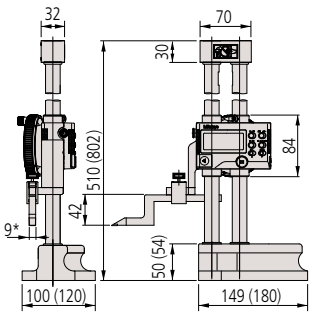

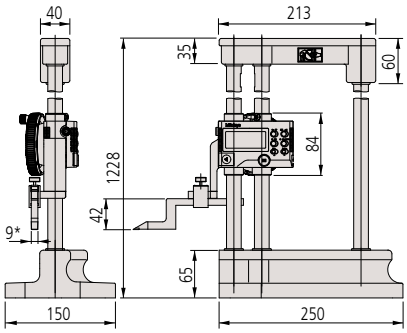

*0.25 in for Inch models.

Functions (Refer to Page D-54)

Standard Accessories

Order No.	Description	Models
905200	Scriber	**192-663-10** **192-664-10** **192-665-10**
905201	Scriber	**192-670-10** **192-671-10** **192-672-10** **192-673-10**
05GZA033	Scriber clamp box	**192-663-10** **192-664-10** **192-665-10**
901385	Scriber clamp box	**192-670-10** **192-671-10** **192-672-10** **192-673-10**

Optional Output Devices

Order No.	Description
Wired	
264-020	USB Input tool (**IT-020U**)
- 905338	Connecting Cable (**1m**)
- 905409	Connecting Cable (**2m**)
06AFM380F	USB Input Tool Direct (**2m**)
Wireless	
264-620	Transmitter (**IP67**)
264-624	Transmitter (**IP67, Bluetooth**)
264-621	Transmitter (**Buzzer**)
264-625	Transmitter (**Buzzer, Bluetooth**)
- 02AZD790F	Connecting Cable
- 02AZE140F	Connecting Cable (**foot switch compatible**)

Note: Model uses connector type "F"

- **Bidirectional touch-trigger probe**: **192-008** (inch), **192-007** (mm)
  Improves accuracy in step, internal thickness, and outside width measurement by minimizing reproducibility error. A bidirectional touch-trigger probe is available as an optional accessory for **192-663-10**,**192-664-10**,**192-665-10**, **192-670-10**,**192-671-10**,**192-672-10** and **192-673-10**.

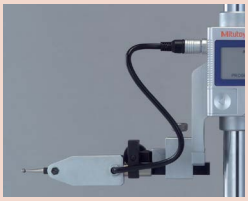

Digimatic Height Gage
SERIES 192 — Multi-function Type with SPC Data Output

- Long reach scriber type.
- Double-column structure ensures stable measurements.
- Ergonomic base fits comfortably in the hand.
- Cannot be used with bidirectional touch-trigger probe.
- Inclined handle improves slider ergonomics.
- Coarse and Fine feed.
- 2 Preset reference heights.
- With SPC output.

192-630-10

Functions

- Origin-setting (ABS measurement mode):
  Any arbitrary value can be stored as the origin point.
- Zero-setting (INC measurement mode):
  Displayed value can be set to zero at any arbitrary position of the slider.
- Origin restoration:
  Previously set origin is restored when switching back to ABS mode.
- Presetting (ABS INC measurement mode):
  Displayed value can be set to any arbitrary value, including negative values.
- Measuring direction:
  Measuring direction can be switched at the press of a button.
- Data hold:
  Display value can be held. Reverts to ABS or INC mode when cancelled.
- Alarm: Error message is displayed when overflow or overspeed of displayed value arises and measurement is stopped.
- Data output:
  Allows integration into statistical process control and measurement systems (refer to Section A).
- Fine and coarse height adjustment through knob and wheel combination.
  Slider height adjustment wheel allows fine and coarse height adjustment.
- Probe-tip diameter compensation: An adjustment is applied to the raw measurement data to compensate for the effect of the size of the spherical contact point used by the bidirectional touch-trigger probe.
- Presetting (2 positions): With two preset functions, two reference heights can be used relative to a surface plate.

Standard Accessories

Order No.	Description	Models
07GZA000	Scriber	**192-613-10** **192-614-10** **192-615-10**
900258	Scriber	**192-630-10** **192-631-10** **192-632-10** **192-633-10**
05GZA033	Scriber clamp box	**192-613-10** **192-614-10** **192-615-10**
901385	Scriber clamp box	**192-630-10** **192-631-10** **192-632-10** **192-633-10**

Optional Output Devices

Order No.	Description
Wired	
264-020	USB Input tool (**IT-020U**)
- 905338	Connecting Cable (**1m**)
- 905409	Connecting Cable (**2m**)
06AFM380F	USB Input Tool Direct (**2m**)
Wireless	
264-620	Transmitter (**IP67**)
264-624	Transmitter (**IP67, Bluetooth**)
264-621	Transmitter (**Buzzer**)
264-625	Transmitter (**Buzzer, Bluetooth**)
- 02AZD790F	Connecting Cable
- 02AZE140F	Connecting Cable (**foot switch compatible**)

Note: Model uses connector type "F"

SPECIFICATIONS

Inch / Metric

Order No.	Range (in)	Resolution	Accuracy* (in)	Response speed (mm/s)	Height (mm)	Mass (kg)
192-630-10	0 - 12	0.01 mm/0.005 mm (selectable)	±0.001	Approx. 500	475	4.7
192-631-10	0 - 18		±0.002		649	7.5
192-632-10	0 - 24	0.0005 in/0.0002 in (selectable)	±0.002		802	8.3
192-633-10	0 - 40		±0.003		1228	15.7

Metric

Order No.	Range (mm)	Resolution (mm)	Accuracy* (mm)	Response speed (mm/s)	Height (mm)	Mass (kg)
192-613-10	0 - 300	0.01/0.005 (selectable)	±0.02	Approx. 500	475	4.7
192-614-10	0 - 600		±0.05		802	8.3
192-615-10	0 - 1000		±0.07		1228	15.7

- Power source: SR44 battery (1 pc.), **938882** included as standard (for operational checks)
- Battery life: Approx. 3,500 hours in continuous use

* E_{MPE} (ISO 13325:2012). Largest value across the measuring range.

DIMENSIONS

192-613-10, 192-614-10, 192-630-10, 192-631-10, 192-632-10
( ): **192-614-10, 192-632-10**

192-615-10, 192-633-10

Unit: mm

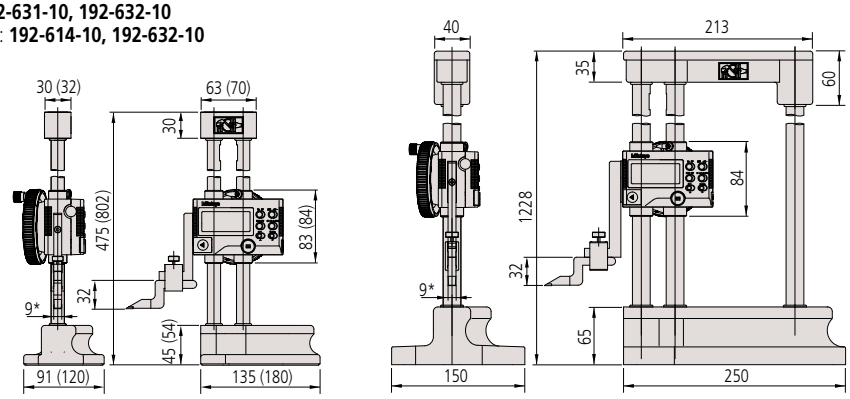

*0.25 in for Inch models.

Mitutoyo

Height Gage

MeasurLink ENABLED
Data Management Software by Mitutoyo

ABSOLUTE™

ABSOLUTE Digimatic Height Gage SERIES 570 — with Ergonomic Base

- New standard model which features a prismatic column and offers excellent rigidity and accuracy.
- Allows smooth elevation by the slider adjustment wheel.
- **U-WAVE-T/TC/TCB** (wireless data transmitter) can be installed on the back of the display unit.

570-412

Equipped with **U-WAVE-T/TC/TCB**

Note: When attaching the **U-WAVE**, use commercially available double-sided tape, etc.

SPECIFICATIONS

Inch / Metric

Order No.	Range	Resolution	Accuracy*	Response speed	Mass (kg)
570-412	0 to 12 in/0 to 300 mm	0.0005 in/ 0.01 mm	±0.0015 in/±0.03 mm	Unlimited	4.6
570-413	0 to 18 in/0 to 450 mm		±0.0020 in/±0.05 mm		5.9
570-414	0 to 24 in/0 to 600 mm				6.4

Metric

Order No.	Range (mm)	Resolution (mm)	Accuracy* (mm)	Response speed	Mass (kg)
570-402	0 - 300	0.01	±0.03	Unlimited	4.6
570-404	0 - 600		±0.05		6.4

- Power source: SR44 battery (1 pc.), **938882** included as standard (for operational checks)
- Battery life: Approx. 5 years

* E_{MPE} (ISO 13325:2012). Largest value across the measuring range.

DIMENSIONS

Unit: mm

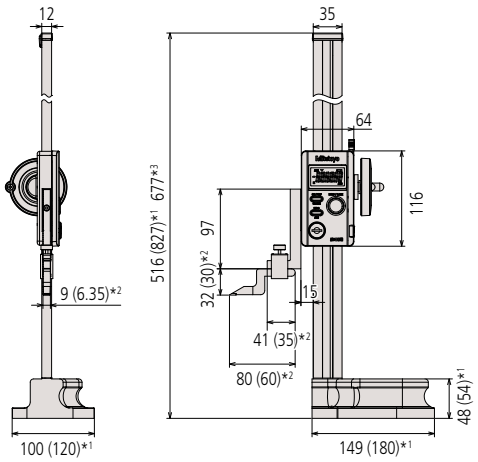

*1 0 to 450 mm, 0 to 600 mm
*2 Inch model
*3 0 to 450 mm

Measurement Example

Functions

- Origin-setting:
  Any convenient reference surface, such as a surface plate, etc., can be stored as the ABSOLUTE origin point.
- ABSOLUTE measurement:
  After power is turned ON, measurement can be started without zero-setting if origin-setting was previously performed. ABSOLUTE origin position can be changed by ORIGIN button.
- Incremental measurement: Allows origin setting at any arbitrary position. In this case, the origin point is not stored after turning off the power.
- Data hold
  Display value can be held.
- Data output:
  Allows integration into statistical process control and measurement systems (refer to Section A).
- Low-voltage alert:
  Low-voltage alert: If the battery voltage becomes low, a "B" appears in the display to alert the user before measurement is no longer possible so that the battery can be changed in good time.

Standard Accessories

Order No.	Description	Models
07ZA000	Scriber	**570-402** **570-404**
900258	Scriber	**570-412** **570-413** **570-414**
05GZA033	Scriber clamp box	**570-402** **570-404**
901385	Scriber clamp box	**570-412** **570-413** **570-414**

Optional Output Devices

Order No.	Description
Wired	
264-020	USB Input tool (**IT-020U**)
- 905338	Connecting Cable (**1m**)
- 905409	Connecting Cable (**2m**)
06AFM380F	USB Input Tool Direct (**2m**)
Wireless	
264-620	Transmitter (**IP67**)
264-624	Transmitter (**IP67, Bluetooth**)
264-621	Transmitter (**Buzzer**)
264-625	Transmitter (**Buzzer, Bluetooth**)
- 02AZD790F	Connecting Cable
- 02AZE140F	Connecting Cable (**foot switch compatible**)

Note: Model uses connector type "F"

D

Height Gage

ABSOLUTE Digimatic Height Gage SERIES 570 — Standard Model

- Simple design is easy to use.
- Scriber is provided as a standard accessory.
- When a dial indicator or dial test indicator is used with **570-244** and **570-227** the holding bar **953639** (overall length 2 inch) is recommended.

570-244

Functions

- Zero-setting
- +/- directional measurement
- Data hold
- Data output
- Presetting
- Inch/mm reading (inch/mm models)
- Preset value memory
- Origin restoration
- Low battery voltage alert
- Counting value composition error alert

Standard Accessories

Order No.	Description	Models
900173	Scriber	**570-227** **570-244**
905200	Scriber	**570-230** **570-248**
901338	Scriber clamp box	**570-227** **570-244**
05GZA033	Scriber clamp box	**570-230** **570-248**

Optional Output Devices

Order No.	Description
Wired	
264-020	USB Input tool (**IT-020U**)
- 905338	Connecting Cable (**1m**)
- 905409	Connecting Cable (**2m**)
06AFM380F	USB Input Tool Direct (**2m**)
Wireless	
264-620	Transmitter (**IP67**)
264-624	Transmitter (**IP67, Bluetooth**)
264-621	Transmitter (**Buzzer**)
264-625	Transmitter (**Buzzer, Bluetooth**)
- 02AZD790F	Connecting Cable
- 02AZE140F	Connecting Cable (**foot switch compatible**)

Note: Model uses connector type "F"

Talk to Sales

SPECIFICATIONS

Inch / Metric

Order No.	Range (in)	Resolution	Fine feed (in)	Accuracy* (in)	Height (mm)	Mass (kg)
570-244	0 - 8	0.0005 in/0.01 mm	0.16	±0.002	355	1.4
570-248	0 - 40		0.24	±0.003	1260	16.8

Metric

Order No.	Range (mm)	Resolution (mm)	Fine feed (mm)	Accuracy* (mm)	Height (mm)	Mass (kg)
570-227	0 - 200	0.01	4	±0.03	355	1.4
570-230	0 - 1000		6	±0.07	1260	16.8

- Power source: SR44 battery (1 pc.), **938882** included as standard (for operational checks)
- Battery life: Approx. 5,000 hours under normal use

* E_{MPE} (ISO 13325:2012). Largest value across the measuring range.

DIMENSIONS

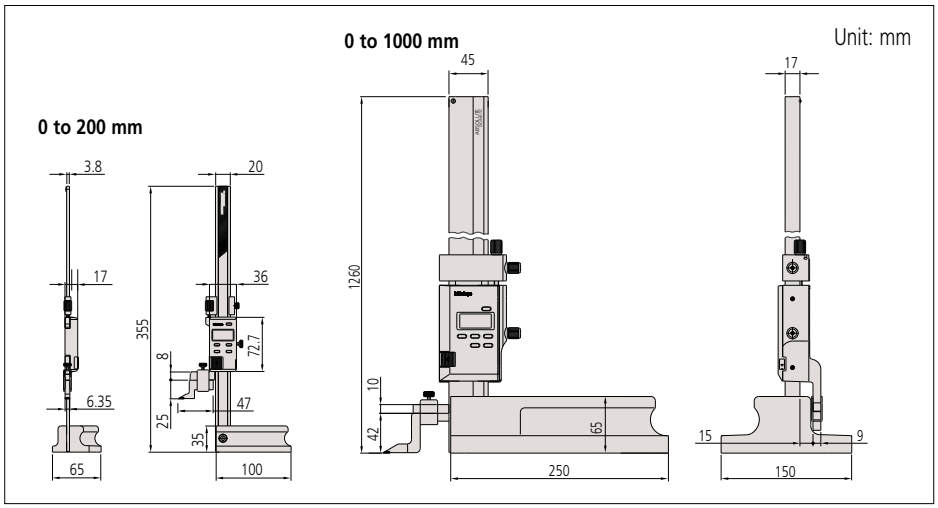

Height Gage

Vernier Height Gage
SERIES 514, 506 — Standard Height Gage with Adjustable Main Scale

- Standard Vernier height gage. Fits comfortably in the hand and moves easily on the surface plate.
- Scriber is provided as a standard accessory.
- When installing a dial indicator or dial test indicator on **506-207**, ensure that the overall system can keep a good weight balance to ensure reliable measurement.
- The main scale slides and clamps within the column for quick and convenient zero-setting. (only for the **514** Series)

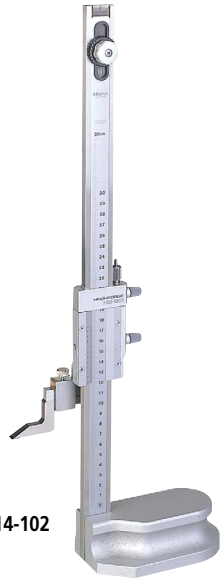

514-102

506-207

Standard Accessories

Order No.	Description	Models
900173	Scriber	**506-207** **506-208**
07GZA000	Scriber	**514-102** **514-103** **514-104** **514-105** **514-106** **514-107**
905200	Scriber	**514-108** **514-109**
06AGR304	Scriber clamp box	**506-207** **506-208**
05GZA033	Scriber clamp box	**514-102** **514-103** **514-104** **514-105** **514-106** **514-107** **514-108** **514-109**

SPECIFICATIONS

Inch / Metric

Order No.	Range (in)	Minimum reading	Scale adjustment (in)	Fine feed (in)	Accuracy* (in)	Height (mm)	Mass (kg)
506-208	0 - 8	0.001 in/0.02 mm	—	0.16	±0.001	341	1.4
514-103	0 - 12		0.6		±0.002	525	3.1
514-105	0 - 18					675	3.4
514-107	0 - 24			0.27		870	7.4
514-109	0 - 40		1	0.24	±0.003	1340	20

Metric

Order No.	Range (mm)	Minimum reading (mm)	Scale adjustment (mm)	Fine feed (mm)	Accuracy* (mm)	Height (mm)	Mass (kg)
506-207	0 - 200	0.02	—	4	±0.03	341	1.4
514-102	0 - 300		15		±0.04	525	3.1
514-104	0 - 450				±0.05	675	3.4
514-106	0 - 600			7		870	7.4
514-108	0 - 1000		25	6	±0.07	1340	20

- Reading magnifier (optional): **514-102**, **104**, **106**: **07GZA003**, **514-108**: **07GZA015**

* E_{MPE} (ISO 13325:2012). Largest value across the measuring range.

Where to Buy

DIMENSIONS

Unit: mm

0 to 300 to 0 to 1000 mm

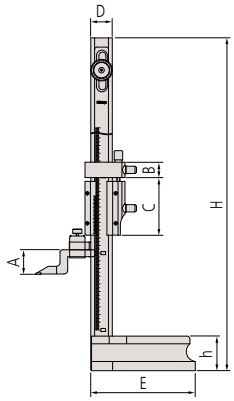

0 to 200 mm

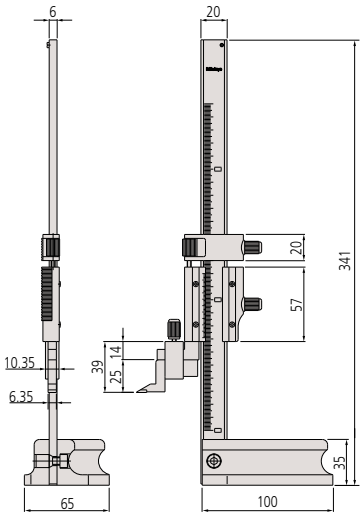

Range (mm)	A	B	C	D	E	H	h
0 - 300	32	20	70	28	135	525	45
0 - 450						675	
0 - 600		24	85	35	180	870	54
0 - 1000	42	30	110	45	250	1340	65

D

Mitutoyo

Height Gage

Dial Height Gage
SERIES 192 — with Mechanical Counter

- Easy and error-free reading with both up and down digital counters as well as a dial.
- The counters and dial can be re-zeroed at any scriber position.
- Provided with a feed wheel for easy coarse feeding.
- Carbide-tipped scriber is provided.

192-130

Standard Accessories

Order No.	Description	Models
07ZA000	Scriber	192-130 192-131 192-132 192-133
900258	Scriber	192-150 192-151 192-152 192-153
05GZA300	Scriber clamp box	192-130 192-131 192-132 192-133
901385	Scriber clamp box	192-150 192-151 192-152 192-153

D

SPECIFICATIONS

Inch

Order No.	Range (in)	Graduation (in)	Accuracy* (in)	Height (mm)	Mass (kg)
192-150	0 - 12	0.001	±0.0015	470	4.2
192-151	0 - 18		±0.002	648	9.2
192-152	0 - 24			798	9.8
192-153	0 - 40		±0.003	1220	17.0

Metric

Order No.	Range (mm)	Graduation (mm)	Accuracy* (mm)	Height (mm)	Mass (kg)
192-130	0 - 300	0.01	±0.03	470	4.2
192-131	0 - 450		±0.05	648	9.2
192-132	0 - 600			798	9.8
192-133	0 - 1000		±0.07	1220	17.0

* E_{MPE} (ISO 13325:2012). Largest value across the measuring range.

DIMENSIONS

0 to 12 in (0 to 18 in, 0 to 24 in)
0 to 300 mm (0 to 450 mm, 0 to 600 mm)

0 to 40 in
0 to 1000 mm

Unit: mm

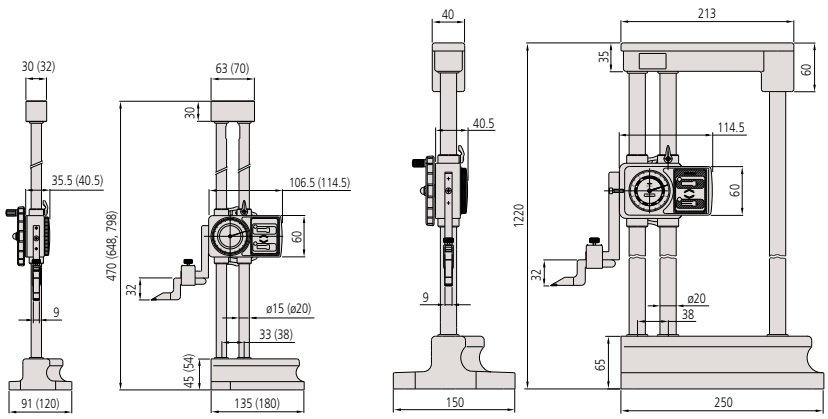

Get a Quote

Height Gage
Optional Accessories for Height Gages

SPECIFICATIONS (Scriber)

Inch

Order No.	Applicable Height Gages
900173	570 Series Digimatic Height Gages (**570-227, 570-244**)
	506 Series Vernier Height Gages (**506-201/207/204, 506-208**)
900258	192 Series Digimatic Height Gages (**192-630-10, 192-631-10, 192-632-10, 192-633-10**)
	570 Series Digimatic Height Gages (**570-412, 570-413, 570-414**)
	574 Series Heightmatic (**574-212-1, 574-211-1, 574-210-1**)
905201	192 Series Digimatic Height Gages (**192-670-10, 192-671-10, 192-672-10, 192-673-10**)
	570 Series Digimatic Height Gage (**570-248**)

Metric

Order No.	Applicable Height Gages
07GZA000	192 Series Digimatic Height Gages (**192-613-10, 192-614-10, 192-615-10**)
	570 Series Digimatic Height Gages (**570-302, 570-304**)
	192 Series Dial Height Gages (**192-130, 192-131, 192-132, 192-133**)
	514 Series Vernier Height Gages (**514-102, 514-104, 514-106, 514-103, 514-105, 514-107**)
	570 Series Digimatic Height Gages (**570-402/404**)
900168	514 Series Vernier Height Gages (**514-160/172**)
905200	192 Series Digimatic Height Gages (**192-663-10, 192-664-10, 192-665-10**)
	570 Series Digimatic Height Gage (**570-230**)
	514 Series Vernier Height Gages (**514-108, 514-109**)
900390	514 Series Vernier Height Gage (**514-170**)

DIMENSIONS (Scriber)

Unit: mm

900173

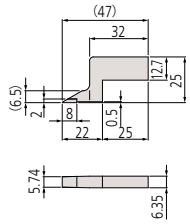

905200

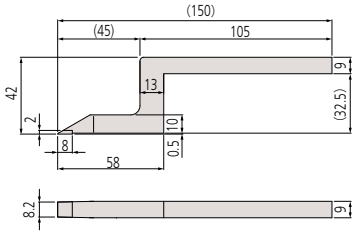

900390

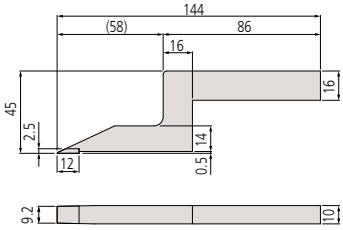

07GZA000

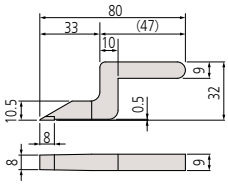

900168

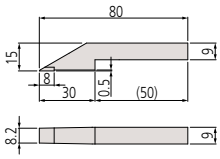

Values in parenthesis are reference dimensions.

Mitutoyo

Height Gage

Height Gage
Optional Accessories for Height Gages

Dial Test Indicators

For additional information about the attachment of dial test indicators, refer to Section F.

Swivel Clamps

Attach from Test Indicator to stem of Holding Bar.

For 0.157 inch DIA. stem and 0.375 inch DIA. stem, and dovetail

900322

For ø6 mm stem, ø8 mm stem, and dovetail

902053

For ø4 mm stem and ø8 mm stem, and dovetail

900321

Holding Bars

Replaces scriber to attach Swivel Clamp to Height Gage.

0.25 in×0.5 in

953639 (Length: 2 in)
900306 (Length: 4 in)

9×9 mm

953638 (Length: 50 mm)
900209 (Length: 100 mm)

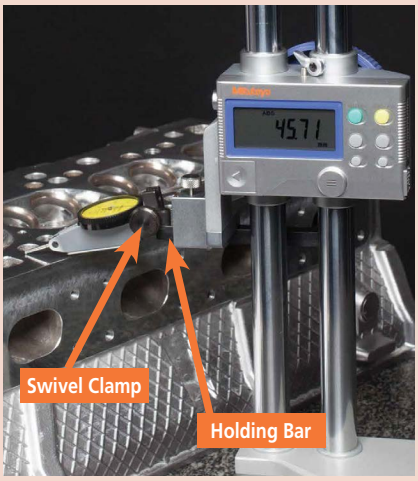

Contact Sensor

900872

- This is a convenient sensor to be attached to both the workpiece*1 and the height gage*2, giving a lamp display when the scriber touches the workpiece.
  *1 Conductive workpieces only.
  *2 Attach to a conductive part.
- Magnet is incorporated.
- Battery (PR44, 2 pcs. required) is not included.
- Use it on a precision black granite surface plate (refer to Section E).

Center Probe

900581 (inch)
951144 (metric)

- Allows quick measurement of center-to-center distance between holes.
- Measurable hole diameters: 1 to 38 mm
- Mounting bar section: .25 x .5 in (Inch), 9×9 mm (metric)

Depth Gage Attachment

900878 (Inch) .25 x .5 in
900764 (metric) 9×9 mm

- Attaches to a height gage for measuring groove and hole depth.
- Minimum hole diameter: 5.5 mm
- Maximum distance from the bottom of the holding bar to the contact point: 80 mm (metric type), 2.95 in (inch type)
- Dial indicator contact points are usable (refer to Section F).
- Holding bar length: 4 in / 100 mm

Need Support?

Benefits of CERA (Zirconia Ceramic) Gage Blocks*

- Extremely high wear resistance, 3x better than carbide.
- Corrosion proof – no oil needed.
- Closest expansion coefficient to steel.
- Anti-magnetic – keeps away steel dust.
- Crack and burr resistant.
- Low thermal conductivity – excellent dimensional stability under brief temperature changes (from handling, etc.)

Typical Applications

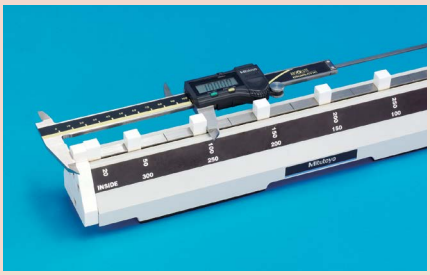

Checking accuracy of caliper (outside measurement)

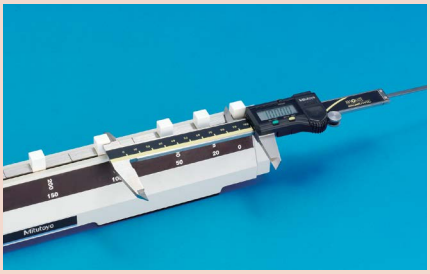

Checking accuracy of caliper (inside measurement)

Checking accuracy of height gage

CERA Caliper Checker SERIES 515

- Permanently wrung, high grade CERA gage blocks in a protective metal casing.
- Can also stand perpendicular to a surface for height gage inspection.
- Designed to inspect calipers.

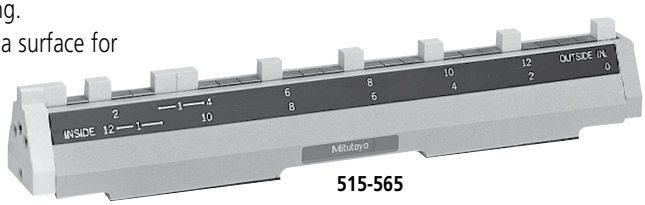

515-565

SPECIFICATIONS

Inch

Order No.	Range (in)	Block pitch accuracy*	Parallelism of blocks*	Mass (kg)
		1 - 12 in	1 - 12 in	
515-565	0 - 12	±0.0002 in	0.00008 in	4

Metric

Order No.	Range (mm)	Block pitch accuracy*		Parallelism of blocks*		Mass (kg)
		20 - 300 mm	350 - 600 mm	20 - 300 mm	350 - 600 mm	
515-555	0 - 300	±5.0 µm	—	2.0 µm	—	4
515-556-2	0 - 600		±7.0 µm		4.0 µm	8.5

* The block accuracy and the parallelism of blocks are based on the following:
- Outside caliper and height gage: Lower end reference plane
- Inside caliper: Inside reference plane

DIMENSIONS

Unit: mm

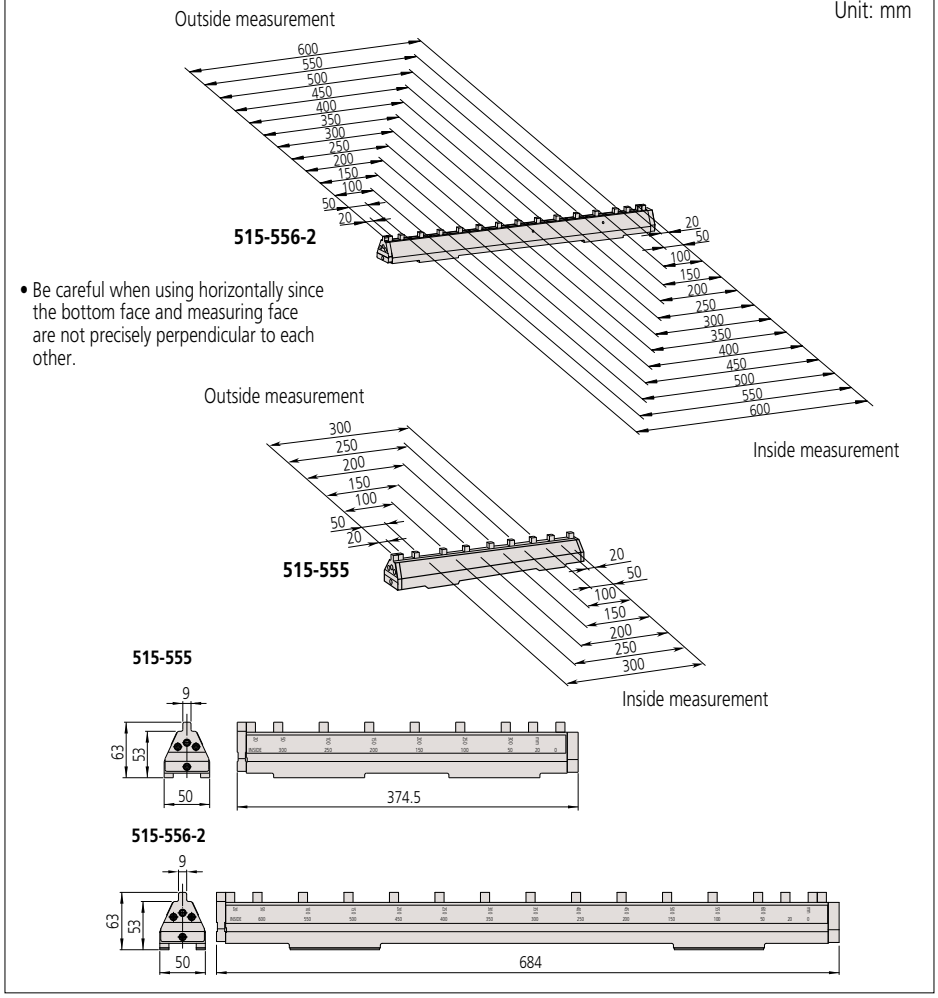

- Be careful when using horizontally since the bottom face and measuring face are not precisely perpendicular to each other.

D

Featured Products

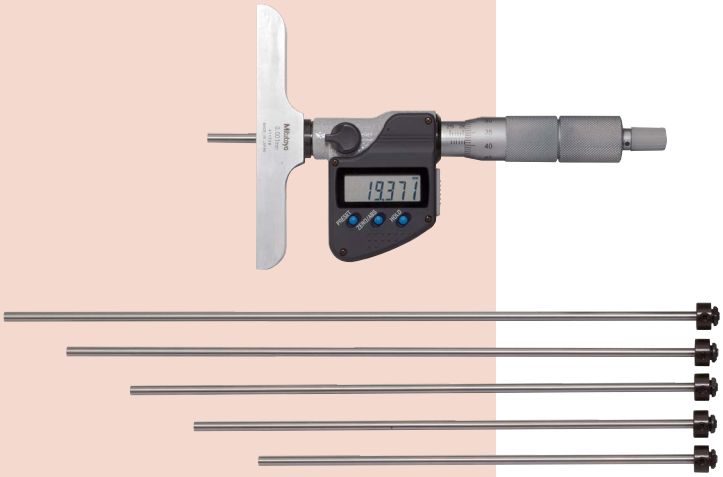

Depth Micrometer

329 Series Digimatic Depth Micrometer with Interchangeable Rods

Refer to page D-67 for details.

ABSOLUTE Digimatic Depth Gage

571 Series Coolant Proof, Long Travel

Refer to page D-71 for details.

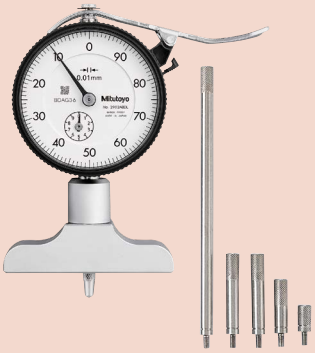

Dial Depth Gage

7000 Series with Interchangeable Rods and Contact Points

Refer to page D-83 for details.

D

Depth Gages

INDEX

Depth Micrometer

Depth Micrometer (Interchangeable Rod Type)	D-67,68
Depth Micrometer	D-69
Depth Micro Checker	D-70

Depth Gage (Caliper type)

ABSOLUTE Digimatic Depth Gage	D-71,72
Dial Depth Gage	D-73
Vernier Depth Gage	D-74,75
Depth Gage (Hook-end Type)	D-76,77
Depth Gage (Point-contact Type)	D-78
Mini Depth Gage	D-79
Extension Bases (Optional Accessory for Depth Gage)	D-80
Depth Gage Attachment (Optional Accessory for Calipers)	D-81

Depth Gage (Indicator type)

ABSOLUTE Digimatic Depth Gage	D-82
Dial Depth Gage	D-83,84

MeasurLink® ENABLED
Data Management Software by Mitutoyo

Measurement Data Network System

MeasurLink® is a measurement data management system based on databases (SQL Server). You can build a network to manage the measurement results and measuring instruments simply by combining the required functions.

MeasurLink® is a registered trademark of Mitutoyo Corporation in Japan and Mitutoyo America Corporation in the United States.

U-WAVE fit

Measurement Data Wireless Communication System

Bluetooth® communication enables wireless transfer of measurement data from Digimatic micrometers and callipers to PCs, smartphones, tablets and such other devices.

IP67

IP Codes

The code indicates the degree of protection against the ingress of foreign materials and water as defined in the IEC standard (IEC 60529). The number indicates the protection level.
(Refer to page 3)

TÜVRheinland CERTIFIED
Dust- and Water-Protected
www.tuv.com ID 0000040191

TÜV Rheinland Certification Marks

All products with the marks have passed the IP test carried out by the German accreditation organization, TÜV Rheinland.

Mitutoyo guarantees the product quality
PROPRIETARY INSPECTION CERTIFICATE

Measuring Instruments Shipped with Inspection Certificate

Mitutoyo guarantees product quality as a leading precision measuring instrument manufacturer and ships measuring instruments with an inspection certificate that includes inspection data so that customers can use them with confidence.

ABSOLUTE™

ABSOLUTE Linear Encoder

Mitutoyo developed the unique ABSOLUTE method to retain position information after the power is turned off.
The origin is set once - thereafter the live position is displayed when the power is turned on.

Mitutoyo

Depth Gage

MeasurLink ENABLED
Data Management Software by Mitutoyo
U-WAVE fit

Depth Micrometer
SERIES 329, 129 — Interchangeable Rod Type

- Interchangeable rods provide a wide measuring range.
- Data output function (329 Series) allows integration into statistical process control and measurement systems (refer to section A).

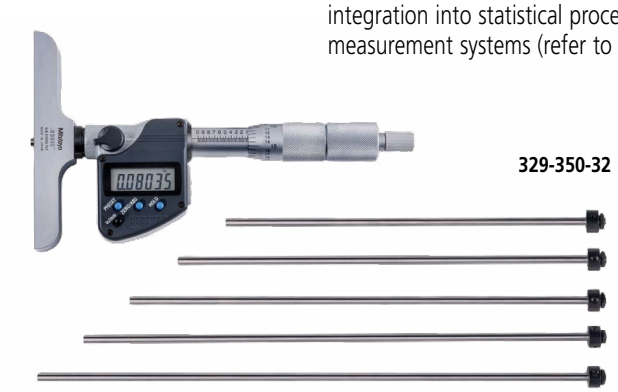

329-350-32

D

SPECIFICATIONS

Inch / Metric

Order No.	Range (in)	Resolution	Base (in)	Accuracy	Base Flatness (in)	Rod Flatness (in)	Parallelism between reference face and measuring rod face (in)	Zero point error of rods (in)	No. of rods
Digimatic (LCD)									
329-350-32	0 - 6	0.00005 in/ 0.001 mm	4×0.63	0.00015 in/ 3 µm	0.00008	0.000012	0.00035	±0.0002	6
329-351-32	0 - 12	0.0001 in/ 0.001 mm					0.0005	±0.0003	12

Metric

Order No.	Range (mm)	Resolution (mm)	Base (mm)	Accuracy	Base Flatness (µm)	Rod Flatness (µm)	Parallelism between reference face and measuring rod face (µm)	Zero point error of rods (µm)	No. of rods
Digimatic (LCD)									
329-250-32	0 - 150	0.001	101.6×16	3	2	0.3	7	±4	6
329-251-30	0 - 300						10	±6	12

Inch

Order No.	Range (in)	Graduation (in)	Base (in)	Accuracy	Base Flatness (in)	Rod Flatness (in)	Parallelism between reference face and measuring rod face (in)	Zero point error of rods (in)	No. of rods
Analog									
129-129	0 - 2	0.001	4×0.63	0.00015	0.00008	0.000012	0.00025	±0.00015	2
129-126	0 - 3		2.5×0.63		0.00005		0.00030		3
129-130			4×0.63		0.00008				
129-127	0 - 4		2.5×0.63		0.00005			±0.00020	4
129-131			4×0.63		0.00008				
129-128	0 - 6		2.5×0.63		0.00005		0.00035		6
129-132			4×0.63		0.00008				
129-149	0 - 12		2.5×0.63		0.00005		0.00050	±0.00030	12
129-150			4×0.63		0.00008				
129-331*	0 - 4		2.4×0.63		0.00005		0.00030	±0.00020	4
129-332*	0 - 6						0.00035		6

* Half Base models

Metric

Order No.	Range (mm)	Graduation (mm)	Base (mm)	Accuracy	Base Flatness (µm)	Rod Flatness (µm)	Parallelism between reference face and measuring rod face (µm)	Zero point error of rods (µm)	No. of rods
Analog									
129-154	0 - 25	0.01	63.5×16	3	1.3	0.3	5	±3	1
129-155			101.6×16		2				
129-109	0 - 50		63.5×16		1.3				2
129-113			101.6×16		2				
129-110	0 - 75		63.5×16		1.3		6		3
129-114			101.6×16		2				
129-111	0 - 100		63.5×16		1.3			±4	4
129-115			101.6×16		2				
129-112	0 - 150		63.5×16		1.3		7		6
129-116			101.6×16		2				
129-152	0 - 300		63.5×16		1.3		10	±6	12
129-153			101.6×16		2				

- Power source: SR44 battery (1 pc.), **938882** included as standard (for operational checks)
- Battery life*: Approx. 2.4 years under normal use
- Standard Accessories: **301336** Spanner, **04GAA274** Spanner, **202863** Hex-Spanner

Functions of Series 329

Origin point setting (ABS measurement system):
Resets the ABS origin at the current spindle position to the minimum value of the measuring range and switches to ABS mode.

Zero-setting (INC measurement system):
A brief press on the ZERO/ABS button sets display to zero at the current spindle position and switches to the incremental (INC) measuring mode. A longer press resets to the ABS measuring mode.

Hold:
Pressing the HOLD button freezes the current value in the display. This function is useful for preserving a measurement in situations of poor visibility where the instrument must be moved away from the workpiece before the reading can be recorded.

Data output:
Models equipped with this function have an output port for transferring measurement data to a Statistical Process Control (SPC) system.

Auto power ON / OFF:
The reading on the LCD disappears after this instrument is idle for about 20 minutes, but the reading and measurement mode are retained. Turning the spindle causes the reading to reappear.

Error alarm:
In case of an overflow on the LCD or a computing error, an error message appears on the LCD, and the measuring function stops. This prevents an instrument from giving an erroneous reading. Also, when the battery voltage drops to a certain level, the low-battery-voltage alarm annunciator appears well before the micrometer becomes unusable.

Function lock:
This function allows the PRESET (origin point setting) function and the ZERO (zero-setting) function to be locked to prevent these points being reset accidentally.

Optional Output Devices

Order No.	Description
Wired	
264-020	USB Input tool (**IT-020U**)
- 05CZA662	Connecting Cable (**1m**)
- 05CZA663	Connecting Cable (**2m**)
06AFM380B	USB Input Tool Direct (**2m**)
Wireless	
264-622	Transmitter (**IP67**)
264-626	Transmitter (**IP67, Bluetooth**)
264-623	Transmitter (**Buzzer**)
264-627	Transmitter (**Buzzer, Bluetooth**)
- 02AZF310	Connecting Unit (**Adapter**)
- 02AZE140B	Connecting Cable (**foot switch compatible**)

Note: Model uses connector type "B"

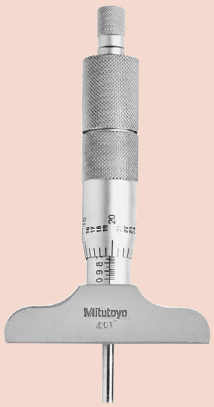

129-127

129-131

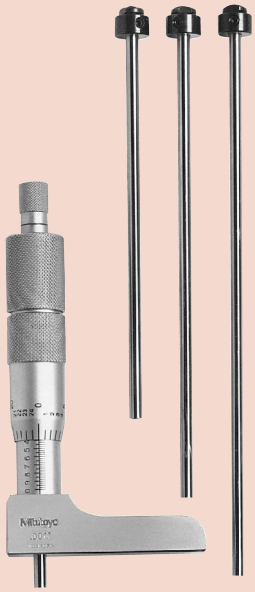

129-331

Depth Micrometer
SERIES 329, 129 — Interchangeable Rod Type

Interchangeable Rod (Optional Accessories)

(Check and adjust the origin point before measurement)

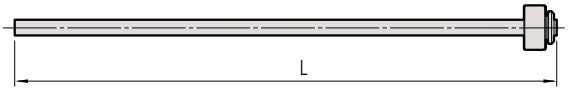

Range (in)		0 - 1	1 - 2	2 - 3	3 - 4	4 - 5	5 - 6	6 - 7	7 - 8	8 - 9	9 - 10	10 - 11	11 - 12
Analog models	**Order No.**	**983502**	**983504**	**983506**	**983508**	**983510**	**983512**	**983526**	**983528**	**983530**	**983532**	**983534**	**983536**
	L (mm)	104.3	129.7	155.1	180.5	205.9	231.3	256.7	282.1	307.5	332.9	358.3	383.7
Digimatic models	**Order No.**	**983506**	**983508**	**983510**	**983512**	**983526**	**983528**	**983530**	**983532**	**983534**	**983536**	**981783**	**981784**
	L (mm)	155.1	180.5	205.9	231.3	256.7	282.1	307.5	332.9	358.3	383.7	409.1	434.5

Range (mm)		0 - 25	25 - 50	50 - 75	75 - 100	100 - 125	125 - 150	150 - 175	175 - 200	200 - 225	225 - 250	250 - 275	275 - 300
Analog models	**Order No.**	**983501**	**983503**	**983505**	**983507**	**983509**	**983511**	**983525**	**983527**	**983529**	**983531**	**983533**	**983535**
	L (mm)	104	129	154	179	204	229	254	279	304	329	354	379
Digimatic models	**Order No.**	**983505**	**983507**	**983509**	**983511**	**983525**	**983527**	**983529**	**983531**	**983533**	**983535**	**981781**	**981782**
	L (mm)	154	179	204	229	254	279	304	329	354	379	404	429

DIMENSIONS

Unit: mm

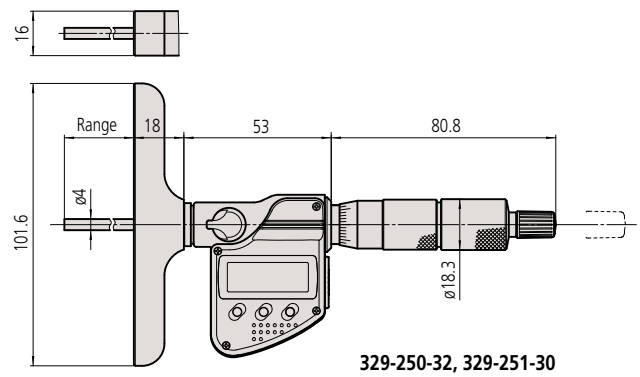

329-250-32, 329-251-30

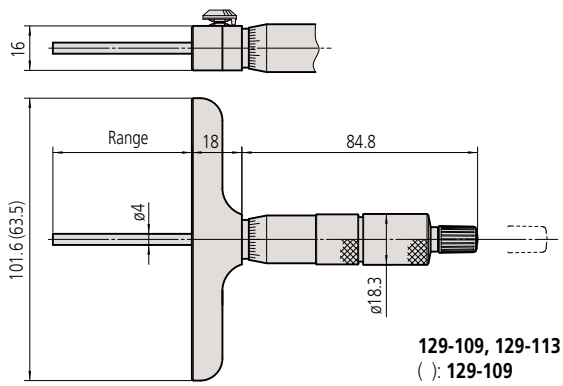

129-109, 129-113
( ): **129-109**

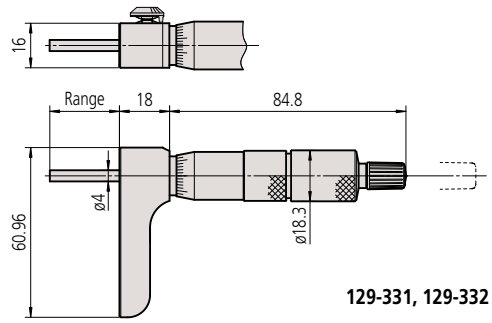

129-331, 129-332

D

Mitutoyo

Depth Gage

Depth Micrometer SERIES 128

- Measuring rod diameter: ø4 mm.
- With measuring rod clamp.
  Note: The clamp is on rear surface.
- Carbide-tipped measuring rod model is available.
- With ratchet stop for constant measuring force.

128-101

128-106

Measurement Example

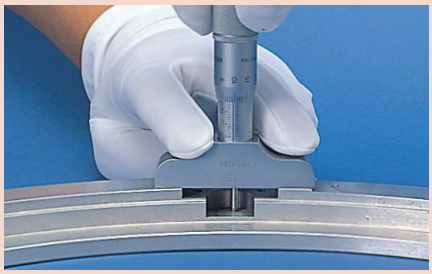

D

SPECIFICATIONS

Inch

Order No.	Range (in)	Graduation (in)	Accuracy	Base Flatness (in)	Rod Flatness (in)	Parallelism between reference face and measuring rod face (in)	Base (in)
128-105	0 - 1	0.001	±0.00015	0.000052	0.000012	0.00025	2.5×0.63
128-106				0.00008			4×0.63

Metric

Order No.	Range (mm)	Graduation (mm)	Accuracy	Base Flatness (µm)	Rod Flatness (µm)	Parallelism between reference face and measuring rod face (µm)	Base (mm)
128-101	0 - 25	0.01	±3	1.3	0.3	5	63.5×16
128-103*							
128-102				2			101.6×16
128-104*							

- Standard Accessories: **301336** Spanner

* With carbide-tipped measuring rod

DIMENSIONS

Unit: mm

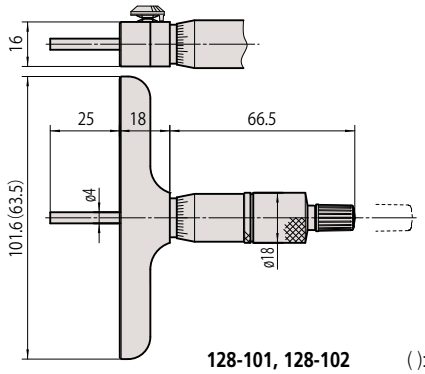

128-101, 128-102 ( ): **128-101**

Find a Distributor

Measurement Example

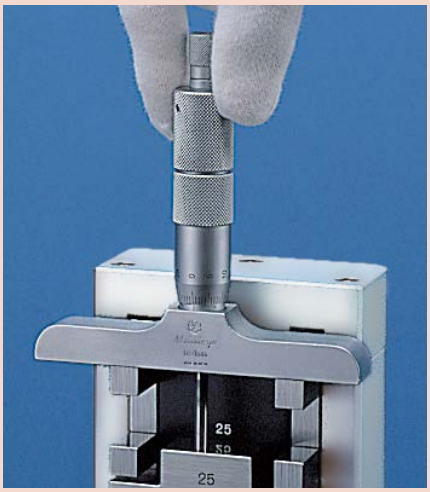

Depth Micro Checker SERIES 515

- The Depth Micro Checker is designed to efficiently check the zero point of a depth micrometer.

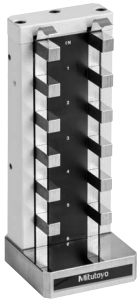

515-575

515-570

515-571

SPECIFICATIONS

Inch

Order No.	Range (in)	Block pitch accuracy	Anvil block accuracy (µin)
515-575	0 - 6	±(40 + L/0.15) µin, L = Length to check (in)	±20

Metric

Order No.	Range (mm)	Block pitch accuracy	Anvil block accuracy (µm)
515-570	0 - 150	±(1 + L/150) µm, L = Length to check (mm)	±0.5
515-571	0 - 300		

DIMENSIONS

Unit: mm

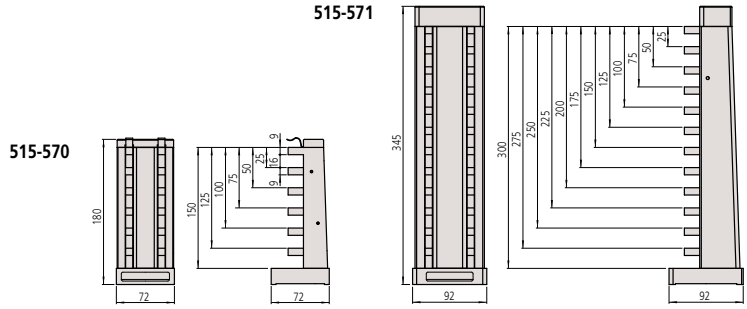

Depth Gage

ABSOLUTE Digimatic Depth Gage SERIES 571

- Made of hardened stainless steel with micro-lapped base and measuring faces.
- Enables stable depth measurement with a resolution of .0005 in/0.01mm.
- Coolant proof type IP67 rated.
- Data output function allows integration into statistical process control and measurement systems (refer to catalog section A).
- Optional longer extension bases are available (refer to page D-78).

D

SPECIFICATIONS

Inch / Metric

Order No.	Range (in)	Resolution	Base (W×T) (in)	Accuracy* (in)
571-261-20	0 - 6	0.0005 in/ 0.01mm	3.93×0.23	±0.001 in/±0.02 mm
571-262-20	0 - 8			
571-263-20	0 - 12		3.93×0.25	±0.0015 in/±0.03 mm

Metric

Order No.	Range (mm)	Resolution (mm)	Base (W×T) (mm)	Accuracy* (mm)
571-251-20	0 - 150	0.01	100×6	±0.02
571-252-20	0 - 200			
571-253-20	0 - 300		100×6.3	±0.03

- Dust/Water protection level: IP67
- Power source: SR44 battery (1 pc.), **938882** included as standard (for operational checks)
- Position detection method: ABSOLUTE electromagnetic inductive linear encoder
- Battery life: Approx. 5 years

*E_{MPE} (ISO 13385-2:2020). Largest value across the measuring range

DIMENSIONS

Unit: mm

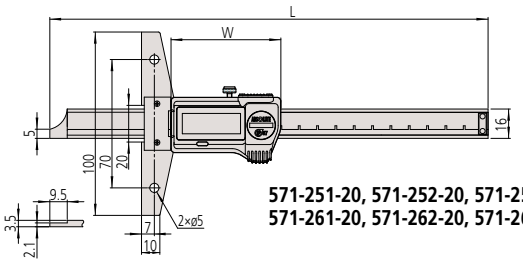

571-251-20, 571-252-20, 571-253-20, 571-261-20, 571-262-20, 571-263-20

Range (mm)	L	W	Base thickness
0 - 150	239	59.2	6
0 - 200	289		
0 - 300	403	71	6.3

MeasurLink ENABLED Data Management Software by Mitutoyo

U-WAVE fit

ABSOLUTE™ IP67

Dust- and Water-Protected TÜVRheinland CERTIFIED www.tuv.com ID 0000045042

Measurement Example

Optional Output Devices

Order No.	Description
Wired	
264-020	USB Input tool (**IT-020U**)
- 05CZA624	Connecting Cable (**1m**)
- 05CZA625	Connecting Cable (**2m**)
06AFM380A	USB Input Tool Direct (**2m**)
Wireless	
264-620	Transmitter (**IP67**)
264-624	Transmitter (**IP67, Bluetooth**)
264-621	Transmitter (**Buzzer**)
264-625	Transmitter (**Buzzer, Bluetooth**)
- 02AZF310	Connecting Unit (**Adapter**)
- 02AZE140A	Connecting Cable (**foot switch compatible**)

Note: Model uses connector type "A"

Depth Gage

ABSOLUTE Digimatic Depth Gage SERIES 571

- Made of hardened stainless steel with micro-lapped base and measuring faces.
- Enables stable depth measurement with a resolution of .0005 in/0.01mm.
- Optional longer extension bases are available (refer to page D-78).
- Data output function allows integration into statistical process control and measurement systems (refer to section A).

571-211-30

Optional Output Devices

Order No.	Description
Wired	
264-020	USB Input tool (**IT-020U**)
- 959149	Connecting Cable (**1m**)
- 959150	Connecting Cable (**2m**)
06AFM380C	USB Input Tool Direct (**2m**)
Wireless	
264-620	Transmitter (**IP67**)
264-624	Transmitter (**IP67, Bluetooth**)
264-621	Transmitter (**Buzzer**)
264-625	Transmitter (**Buzzer, Bluetooth**)
- 02AZF300	Connecting Unit (**Adapter**)*1
- 02AZD790C	Connecting Cable
- 02AZE140C	Connecting Cable (**foot switch compatible**)

Note: Model uses connector type "C"
*1 Not Compatible w/ models over 12, must use Cable

SPECIFICATIONS

Inch / Metric

Order No.	Range (in)	Resolution	Battery life	Base (W×T) (in)	Accuracy* (in)
571-211-30	0 - 6	0.0005 in/ 0.01mm	Approx. 5 years	3.93×0.23	±0.001 in/±0.02 mm
571-212-30	0 - 8				
571-213-30	0 - 12			3.93×0.25	±0.0015 in/±0.03 mm
571-214-10*2	0 - 18		Approx. 3 years	9.8×0.39	±0.002 in/±0.05 mm
571-215-10*2	0 - 24				
571-216-10*2	0 - 30				±0.0025 in/±0.06 mm
571-217-10*2	0 - 40				±0.0025 in/±0.07 mm

Metric

Order No.	Range (mm)	Resolution (mm)	Battery life	Base (W×T) (mm)	Accuracy* (mm)
571-201-30	0 - 150	0.01	Approx. 5 years	100×6	±0.02
571-202-30	0 - 200				
571-203-30	0 - 300			100×6.3	±0.03
571-204-10*2	0 - 450		Approx. 3 years	250×10	±0.05
571-205-10*2	0 - 600				
571-206-10*2	0 - 750				±0.06
571-207-10*2	0 - 1000				±0.07

- Power source: SR44 battery (1 pc.), **938882** included as standard (for operational checks)
- Position detection method: Electrostatic capacity absolute sensor

*E_{MPE} (ISO 13385-2:2020). Largest value across the measuring range
*1 Maximum permissible error, E_{MPE}, is the term defined by ISO 13385-2:2011

DIMENSIONS

Unit: mm

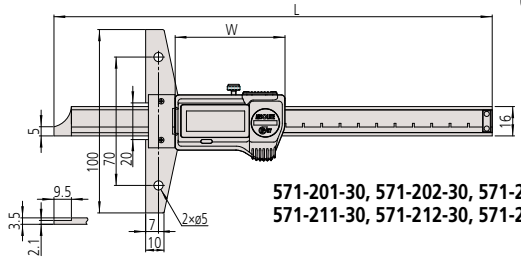

571-201-30, 571-202-30, 571-203-30, 571-211-30, 571-212-30, 571-213-30

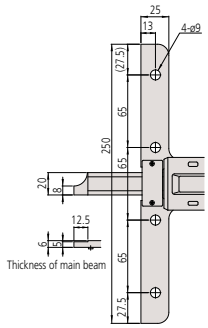

571-204-10, 571-205-10, 571-206-10, 571-207-10, 571-214-10, 571-215-10, 571-216-10, 571-217-10

Range (mm)	L	W	Base thickness
0 - 150	239	59.2	6
0 - 200	289		
0 - 300	403	71	6.3
0 - 450	635	94	10
0 - 600	785		
0 - 750	935		
0 - 1000	1200		

Got Questions?

Depth Gage

Dial Depth Gage
SERIES 527 with Fine Adjustment

- Easier and faster reading of dial.
- Made of hardened stainless steel.
- Base and measuring faces are hardened and micro-lapped.
- Optional wider extension base are available (refer to page D-16).

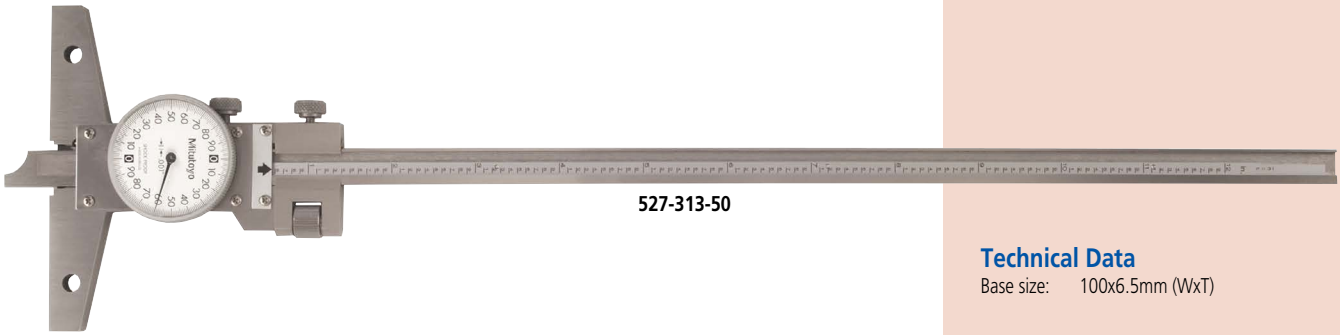

527-313-50

D

Technical Data

Base size: 100x6.5mm (WxT)

SPECIFICATIONS

Inch

Range	Order No.	Dial reading	Accuracy	Mass (g)
0 - 6″	**527-311-50**	.001″	±.001″	280
0 - 8″	**527-312-50**	.001″	±.001″	300
0 - 12″	**527-313-50**	.001″	±.0015″	340

DIMENSIONS

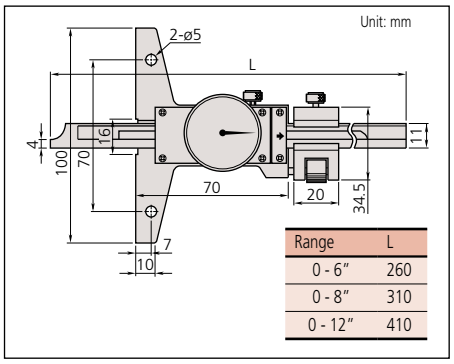

Range	L
0 - 6″	260
0 - 8″	310
0 - 12″	410

Talk to Sales

Vernier Depth Gage SERIES 527

- Made of hardened stainless steel with micro-lapped base and measuring faces.
- Standard Vernier gage for depth measurement.
- Optional longer extension bases are available (refer to page D-78).

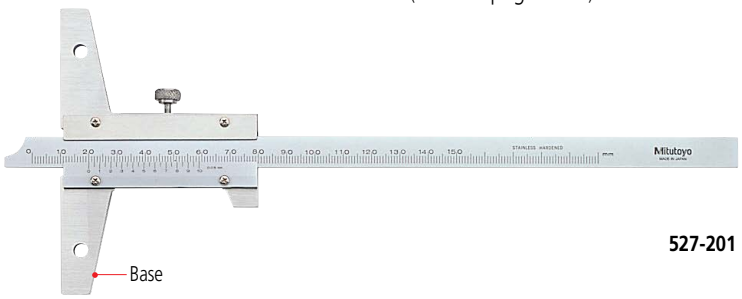

527-201

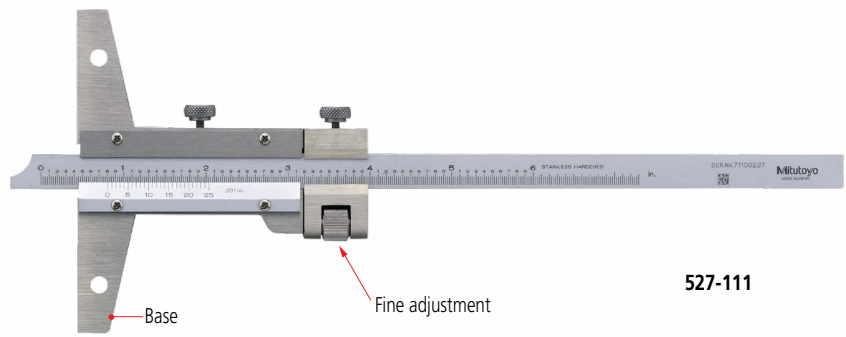

527-111

SPECIFICATIONS

Inch

Order No.	Range (in)	Minimam reading (in)	Base (W×T) (in)	Accuracy* (in)	Remarks
527-111	0 - 6	0.001	3.93×0.25	±0.001	with fine adjustment
527-112	0 - 8				
527-113	0 - 12		9.8×0.39	±0.0015	
527-114	0 - 24			±0.002	
527-115	0 - 40			±0.003	

Metric

Order No.	Range (mm)	Minimum reading (mm)	Base (W×T) (mm)	Accuracy* (mm)	Remarks
527-201	0 - 150	0.05	100×6.5	±0.05	—
527-202	0 - 200				
527-203	0 - 300			±0.08	
527-204	0 - 600		250×10	±0.10	
527-205	0 - 1000			±0.15	

Metric

Order No.	Range (mm)	Minimum reading (mm)	Base (W×T) (mm)	Accuracy* (mm)	Remarks
527-101	0 - 150	0.02	100×6.5	±0.03	with fine adjsutment
527-102	0 - 200				
527-103	0 - 300			±0.04	
527-104	0 - 600		250×10	±0.05	
527-105	0 - 1000			±0.07	

Metric

Order No.	Range (mm)	Minimum reading (mm)	Base (W×T) (mm)	Accuracy* (mm)	Remarks
527-121	0 - 150	0.02	100×6.5	±0.03	—
527-122	0 - 200				
527-123	0 - 300				

*E_{MPE} (ISO 13385-2:2020). Largest value across the measuring range

Depth Gage

DIMENSIONS

Unit: mm

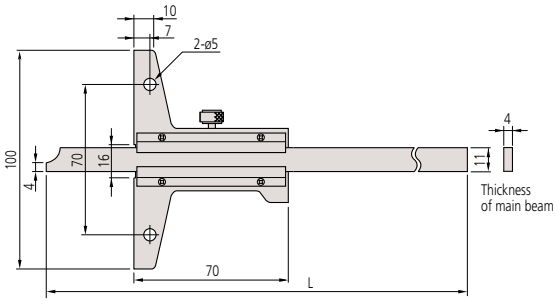

Range (mm)	L
0 - 150	260
0 - 200	310
0 - 300	410

527-201, 527-202, 527-203

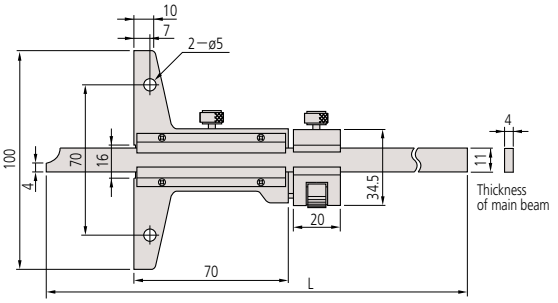

Range (mm)	L
0 - 150	260
0 - 200	310
0 - 300	410

527-101, 527-102, 527-103,
527-111, 527-112, 527-113

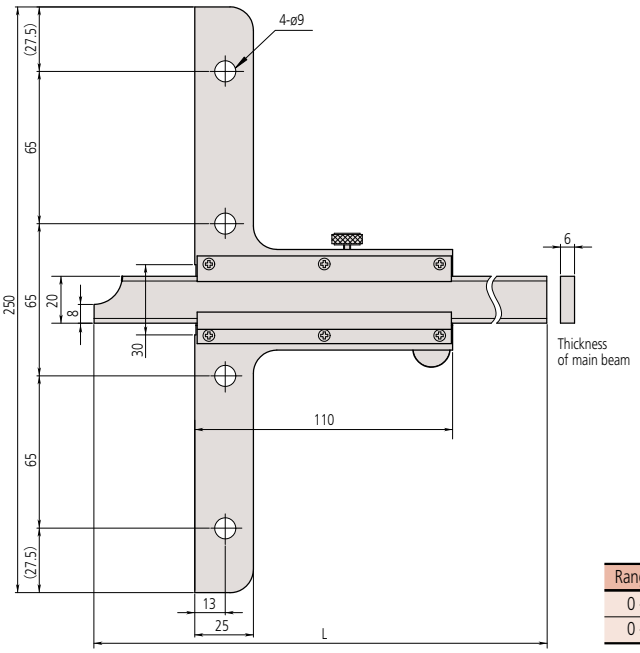

Range (mm)	L
0 - 600	800
0 - 1000	1200

527-204, 527-205, 527-104, 527-105,
527-114, 527-115

Need Repair?

MeasurLink ENABLED
Data Management Software by Mitutoyo
U-WAVE fit
ABSOLUTE™ IP67
TÜVRheinland CERTIFIED Dust- and Water-Protected www.tuv.com ID 0000045042

Depth Gage
SERIES 571 — Hook-end Type

- The end of the main scale is hook-shaped to allow depth and thickness measurements of a projected portion or lip in a hole, in addition to standard depth measurement.
- Made of hardened stainless steel with micro-lapped base and measuring faces.
- Direct reading of depth measurement is available due to the offset-value setting function.
- Coolant proof type IP67 rated.
- Optional longer extension bases are available (refer to page D-78).

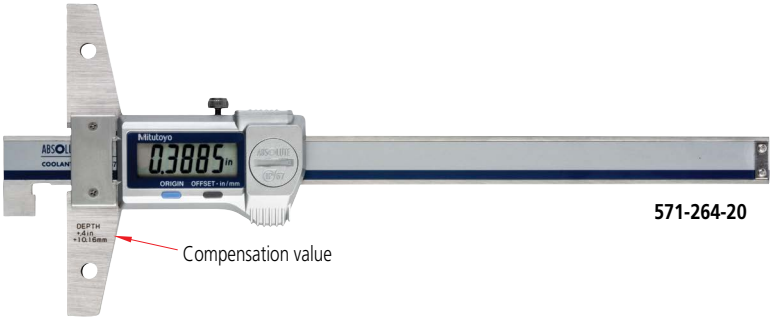

571-264-20

Typical Applications

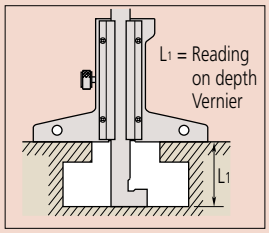

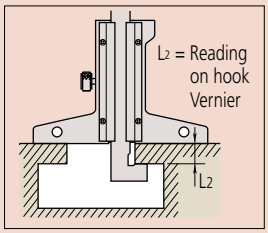

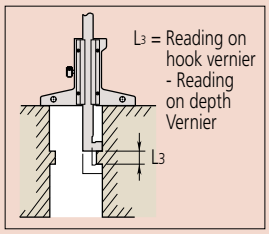

Optional Output Devices

Order No.	Description
Wired	
264-020	USB Input tool (**IT-020U**)
- 05CZA624	Connecting Cable (**1m**)
- 05CZA625	Connecting Cable (**2m**)
06AFM380A	USB Input Tool Direct (**2m**)
Wireless	
264-620	Transmitter (**IP67**)
264-624	Transmitter (**IP67, Bluetooth**)
264-621	Transmitter (**Buzzer**)
264-625	Transmitter (**Buzzer, Bluetooth**)
- 02AZF310	Connecting Unit (**Adapter**)
- 02AZE140A	Connecting Cable (**foot switch compatible**)

Note: Model uses connector type "A"

SPECIFICATIONS

Inch / Metric

Order No.	Range: L1 (L2 and L3)	Resolution	Base (W×T) (mm)	Accuracy*
571-264-20	0.4 in - 6.4 in (0 - 6 in)	0.0005 in/0.01 mm	100×6	±0.0015 in/±0.03 mm
571-265-20	0.4 in - 8.4 in (0 - 8 in)			

Metric

Order No.	Range (mm): L1 (L2 and L3)	Resolution (mm)	Base (W×T) (mm)	Accuracy* (mm)
571-254-20	10.1 - 160 (0 - 150)	0.01	100×6	±0.03
571-255-20	10.1 - 210 (0 - 200)			

- Dust/Water protection level: IP67
- Power source: SR44 battery (1 pc.), **938882** included as standard (for operational checks)
- Position detection method: ABSOLUTE electromagnetic inductive linear encoder
- Battery life: Approx. 5 years

*E_{MPE} (ISO 13385-2:2020). Largest value across the measuring range

DIMENSIONS

Unit: mm

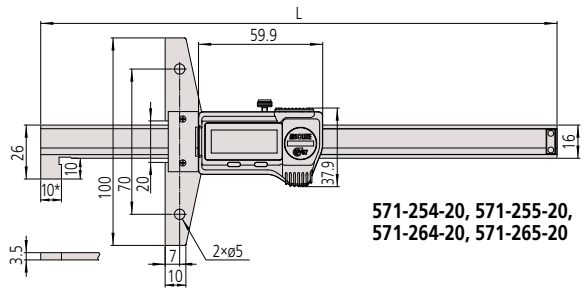

571-254-20, 571-255-20, 571-264-20, 571-265-20

Range (mm)	L
0 - 150	249
0 - 200	299

*0.4 in for Inch models.

D

Mitutoyo

Depth Gage

Depth Gage
SERIES 527 — Hook-end Type

- The end of the main scale is hook-shaped to allow depth and thickness measurements of a projected portion or lip in a hole, in addition to standard depth measurement.
- Made of hardened stainless steel with micro-lapped base and measuring faces.
- Depth can be directly measured with the upper Vernier of the slider and thickness with the lower Vernier.
- Optional longer extension bases are available (refer to page D-78).

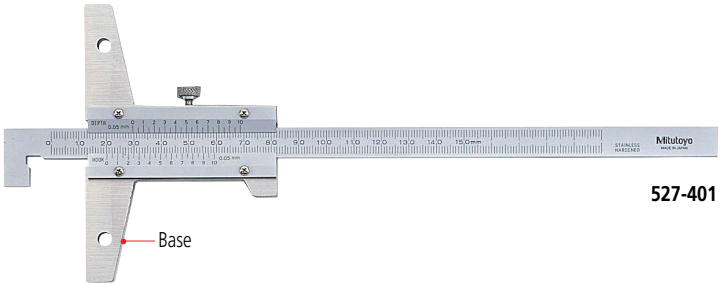

527-401

Typical Applications

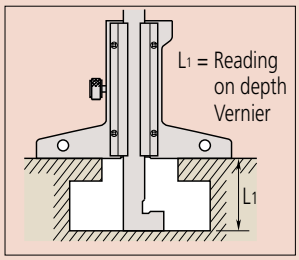

Vernier

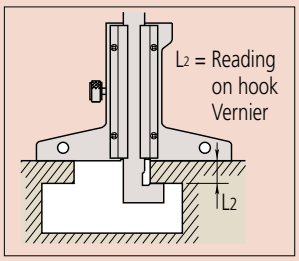

Vernier

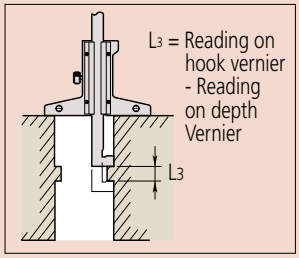

Vernier (both instances)

SPECIFICATIONS

Metric

Order No.	Range (mm): L_1 (L_2 and L_3)	Resolution/Graduation (mm)	Base (W×T) (mm)	Accuracy* (mm)
527-401	10 - 150 (0 - 150)	0.05	100×6.5	±0.05
527-402	10 - 200 (0 - 200)			
527-403	10 - 300 (0 - 300)			±0.08
527-411	10 - 150 (0 - 150)	0.02		±0.03
527-412	10 - 200 (0 - 200)			
527-413	10 - 300 (0 - 300)			±0.04

*E_{MPE} (ISO 13385-2:2020). Largest value across the measuring range

DIMENSIONS

Unit: mm

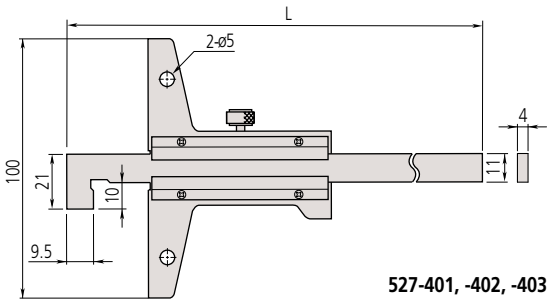

527-401, -402, -403

Range (mm)	L
0 - 150	260
0 - 200	310
0 - 300	410

Where to Buy

Optional Output Devices

Order No.	Description
Wired	
264-020	USB Input tool (**IT-020U**)
- 05CZA624	Connecting Cable (**1m**)
- 05CZA625	Connecting Cable (**2m**)
06AFM380A	USB Input Tool Direct (**2m**)
Wireless	
264-620	Transmitter (**IP67**)
264-624	Transmitter (**IP67, Bluetooth**)
264-621	Transmitter (**Buzzer**)
264-625	Transmitter (**Buzzer, Bluetooth**)
- 02AZF310	Connecting Unit (**Adapter**)
- 02AZE140A	Connecting Cable (**foot switch compatible**)

Note: Model uses connector type "A"

Depth Gage

Depth Gage
SERIES 571 — Point-contact Type

- ABSOLUTE Point-type Digimatic Depth Gage is suitable for measuring inside narrow holes.
- Optional longer extension bases are available (refer to page D-78).
- Made of hardened stainless steel with micro-lapped base and measuring faces.
- Data output function allows integration into statistical process control and measurement systems (refer to catalog section A).
- Coolant proof type IP67 rated.

571-302-20

D

SPECIFICATIONS

Inch / Metric

Order No.	Range	Resolution	Base (W×T) (mm)	Accuracy*
571-311-20	0 - 6 in / 0 - 150 mm	0.0005 in / 0.01 mm	100×6	±0.001 in / ±0.02 mm
571-312-20	0 - 8 in / 0 - 200 mm			

Metric

Order No.	Range	Resolution (mm)	Base (W×T) (mm)	Accuracy* (mm)
571-301-20	0 - 150	0.01	100×6	±0.02
571-302-20	0 - 200			

- Dust/Water protection level: IP67
- Power source: SR44 battery (1 pc.), **938882** included as standard (for operational checks)
- Position detection method: ABSOLUTE electromagnetic inductive linear encoder
- Battery life: Approx. 5 years

*E_{MPE} (ISO 13385-2:2020). Largest value across the measuring range

DIMENSIONS

Unit: mm

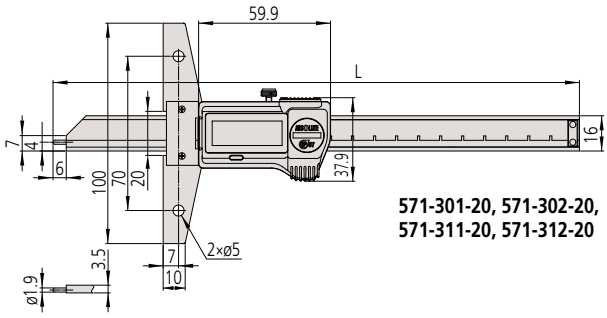

571-301-20, 571-302-20, 571-311-20, 571-312-20

Range (mm)	L
0 - 150	239
0 - 200	289

Depth Gage

Mini Depth Gage
SERIES 571

- Digital display with .0005 in / 0.01 mm resolution.
- Enables measurement of tread depth.
- Made of hardened stainless steel with micro-lapped base and measuring faces.
- ABSOLUTE Digimatic Depth Gage.
- Data output function allows integration into statistical process control and measurement systems (refer to catalog section A).
- Coolant proof type IP67 rated.

571-200-20

D

SPECIFICATIONS

Inch / Metric

Order No.	Range (in)	Resolution (in)	Base (in)	Accuracy* (in)
571-200-20	0 - 1	0.0005	2.36	±0.001

Metric

Order No.	Range (mm)	Resolution (mm)	Base (mm)	Accuracy* (mm)
571-100-20	0 - 25	0.01	60	±0.02

- Dust/Water protection level: IP67
- Power source: SR44 battery (1 pc.), **938882** included as standard (for operational checks)
- Position detection method: ABSOLUTE electromagnetic inductive linear encoder
- Battery life: Approx. 5 years under normal use.

*E_{MPE} (ISO 13385-2:2020). Largest value across the measuring range

DIMENSIONS

Unit: mm

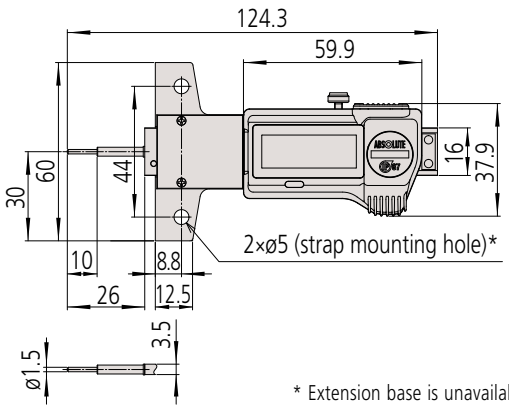

* Extension base is unavailable.

MeasurLink ENABLED
Data Management Software by Mitutoyo

U-WAVE fit

ABSOLUTE™ IP67

TÜVRheinland CERTIFIED
Dust- and Water-Protected
www.tuv.com ID 0000045042

Measurement Example

Optional Output Devices

Order No.	Description
Wired	
264-020	USB Input tool (**IT-020U**)
- 05CZA624	Connecting Cable (**1m**)
- 05CZA625	Connecting Cable (**2m**)
06AFM380A	USB Input Tool Direct (**2m**)
Wireless	
264-620	Transmitter (**IP67**)
264-624	Transmitter (**IP67, Bluetooth**)
264-621	Transmitter (**Buzzer**)
264-625	Transmitter (**Buzzer, Bluetooth**)
- 02AZF310	Connecting Unit (**Adapter**)
- 02AZE140A	Connecting Cable (**foot switch compatible**)

Note: Model uses connector type "A"

Extension Bases
Optional Accessory for Depth Gage

- Attaches to the base (reference face) plate of a depth gage to extend its span.
- These Extension Bases can be attached to 12 in / 300 mm or less range models.
- For over 12 in / 300 mm range models, special-size extensions are available as shown on the left.

Example of Attaching the Extension Base

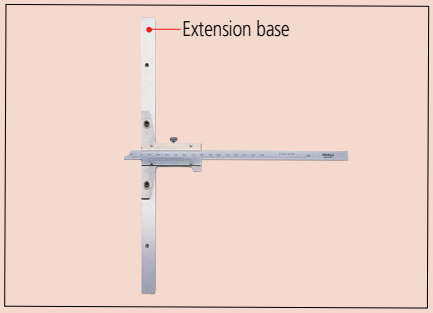

900372

Special Size/ Specifications

Extension bases, to size of specifications other than standard, available by special order. Please consult your nearest M³ Solution Center.

Example of special size

Measuring range of depth gage	L (mm)
12 in /300 mm or less	400
	500
	600
18 in /450 mm or more	400
	500
	600
	700
	800

Attaching the extension base

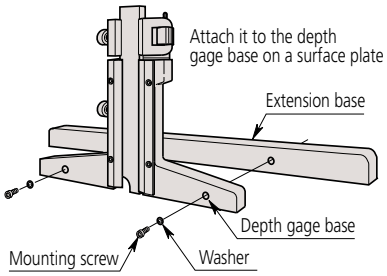

SPECIFICATIONS

Inch

Order No.	Size L (in)	Thickness (in)	Material	n
900367	7	0.3	Stainless Steel	2
900368	10			5
900369	12			4

Metric

Order No.	Size L (mm)	Thickness (mm)	Material	n
900370	180	8	Stainless Steel	2
900371	260			5
900372	320			4

DIMENSIONS

Unit: mm

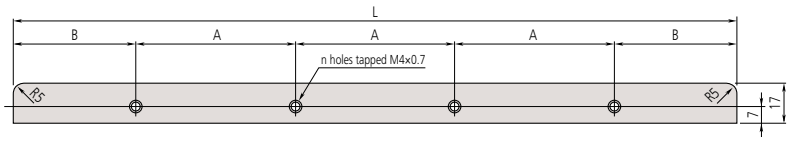

Order No.	A	B	L	n
900370	70	55	180	2
900371	35	60	260	5
900372	70	55	320	4

Get a Quote

Depth Gage

Depth Gage Attachment
Optional Accessory for Calipers

- Attaching this hardened depth gage attachment to the depth measurement face of the caliper makes depth measurement accurate and secure.

050084-10

D

Example of Attaching the Depth Gage Attachment

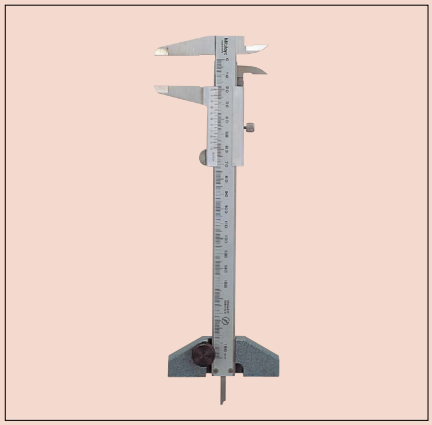

SPECIFICATIONS

Metric

Order No.	Size (mm)	Applicable measuring range of caliper
050083-10	3 in / 75	4 in, 6 in, 8 in, 100 mm, 150 mm, 200 mm
050084-10	4 in / 100	4 in, 6 in, 8 in, 100 mm, 150 mm, 200 mm
050085-10	5 in / 125	12 in (300 mm)

DIMENSIONS

Unit: mm

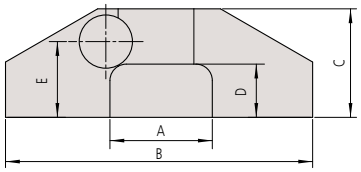

Size (mm)	A	B	C	D	E	T
3 in / 75	25	75	26.5	13	18.5	12
4 in / 100		100				
5 in / 125	30	125	28.5		20	14

T: Base thickness

Need Support?

Depth Gage

ABSOLUTE Digimatic Depth Gage SERIES 547

- Easy-to-read digital display effectively prevents misreading.
- An analog bar indicator on the LCD is convenient for observing subtle movements such as the approach to tolerance.
- Data output function allows integration into statistical process control and measurement systems (refer to catalog section A).

547-217A

Functions

- Peak detection (MAX/MIN)
- Runout range measurement (MAX - MIN)
- Zero-setting (INC system)
- Presetting (ABS system)
- Measuring direction switching
- Tolerance judgment
- Resolution switching
  (For 0.0005 mm or 0.00002 inch resolution type)
- Simple calculation: f(x) =Ax
- Function lock
- Calibration schedule warning
- Auto power OFF
- Data output
- Display value holding (when no external device is connected)
- 330° rotary display
- Low battery/voltage alarm display
- Error alarm display

Optional Output Devices

Order No.	Description
Wired	
264-020	USB Input tool (**IT-020U**)
- 06AGL011	Connecting Cable (**1m**)
- 06AGL021	Connecting Cable (**2m**)
06AGL021	USB Input Tool Direct (**2m**)
Wireless	
264-622	Transmitter (**IP67**)
264-626	Transmitter (**IP67, Bluetooth**)
264-623	Transmitter (**Buzzer**)
264-627	Transmitter (**Buzzer, Bluetooth**)
- 02AZF700	Connecting Unit (**Adapter**)
- 02AZG021	Connecting Cable (**foot switch compatible**)

Note: Model uses connector type "SF"

SPECIFICATIONS

Inch / Metric

Order No.	Range (in)	Resolution	Stroke (in)	Accuracy (in)	Measuring force (N)	Base W (in)	Base T (in)	Base flatness (in)
547-217A	0 - 8	0.0005 in/0.01 mm	0.5	±0.001	1.5 or less	2.5	0.63	0.0002
547-218A						4		
547-257A		0.00002 in (0.00005/0.0001/0.0005 in 0.0005/0.001/0.01 mm selectable)		±0.0002		2.5		0.00008
547-258A						4		

Order No.	Contact point	Extension rod	Indicator
547-217A	Provided with a carbide-tipped ball point (**21JZA242**)	4 pcs. (0.5 in, 1 in, 2 in, 4 in)	**543-712B**
547-218A			
547-257A			**543-702B**
547-258A			

Metric

Order No.	Range (mm)	Resolution (mm)	Stroke (mm)	Accuracy (µm)	Measuring force (N)	Base W (mm)	Base T (mm)	Base flatness (µm)
547-211A	0 - 200	0.01	12.7	±20	1.5 or less	63.5	16	5
547-212A						101.6		
547-251A		0.0005 (0.001/0.01 mm selectable)		±5		63.5		2
547-252A						101.6		

Order No.	Contact point	Extension rod	Indicator
547-211A	Provided with a carbide-tipped ball point (**21JAA224**)	5 pcs. (10, 20, 30, 30, 100 mm)	**543-710B**
547-212A			
547-251A			**543-700B**
547-252A			

DIMENSIONS

Unit: mm

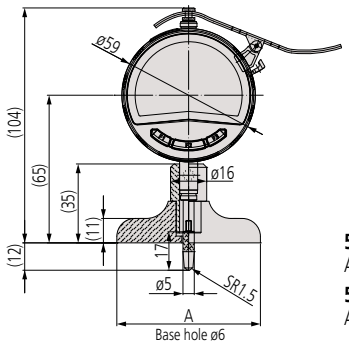

547-211A、547-251A
A=63.5 mm

547-212A、547-252A
A=101.6 mm

Dial Depth Gage

Dial Depth Gage
SERIES 7

- Optimal for hole, narrow groove and step measurement.

D

SPECIFICATIONS

Inch

Order No.	Range (in)	Graduation (in)	Stroke (in)	Accuracy (in)	Measuring force (N)	Base W (in)	Base T (in)	Base Flatness (in)	Base QTY of indicator mounting positions
7217A	0 - 8	0.001	1	±0.002	2.0	2.5	0.63	0.0002	1
7218A						4			
7237A			0.2		1.4	2.5			
7238A						4			

Order No.	Contact point	Extension rod	Indicator (dial indicator)
7217A	Provided with a carbide-tipped ball point (**21JZA242**: 0.7 in)	3 pcs. (1 in, 2 in, 4 in)	**2904AB** for Depth Gage
7218A			
7237A		4 pcs. (0.5 in, 1 in, 2 in, 4 in) Interchangeable contact point (**21JZA243**: 0.9 in)	**1168A** for Depth Gage (Back plunger type)
7238A			

Metric

Order No.	Range (mm)	Graduation (mm)	Stroke (mm)	Accuracy (µm)	Measuring force (N)	Base W (mm)	Base T (mm)	Base Flatness (µm)	Base QTY of indicator mounting positions
7210A	0 - 10	0.01	10	±15	1.4	40	16	5	1
7211A	0 - 200					63.5			
7212A						101.6			
7213A	0 - 210		30	±30	2.5	63.5			
7214A						101.6			
7220A	0 - 200		10	±15	1.4	100	18		2
7221A						150			3
7222A	0 - 10					ø16			1
7223A						ø25			
7224A						ø40			
7231A	0 - 200		5			63.5	16		

Indicator Mounting Positions

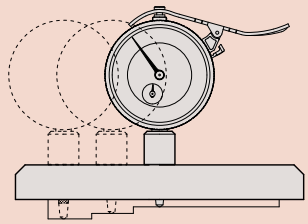

7220A and **7221A** allow the mounting position of a dial indicator to be varied.

When Using an Extension Rod

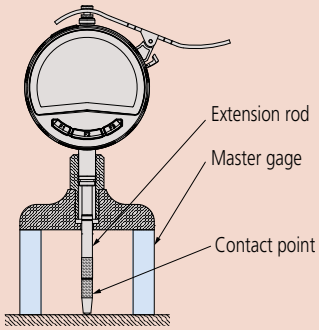

Need Calibration?

Dial Depth Gage

Order No.	Contact point	Extension rod	Indicator (dial indicator)
7210A	Provided with a needle point (**137413**)	—	**2902AB** for Depth Gage
7211A	Provided with a carbide-tipped ball point (**21JAA224**)	5 pcs. (10, 20, 30, 30, 100 mm)	**2902AB** for Depth Gage
7212A			
7213A	Provided with a carbide-tipped ball point (**21JAA225**)	3 pcs. (30, 60, 90 mm)	**2952AB** for Depth Gage
7214A			
7220A	Provided with a carbide-tipped ball point (**21JAA224**)	5 pcs. (10, 20, 30, 30, 100 mm)	**2902AB** for Depth Gage
7221A			
7222A	Provided with a needle point (**137413**)	—	**2902AB** for Depth Gage
7223A	Provided with a carbide-tipped ball point (**21JAA224**: 17 mm)		
7224A			
7231A		5 pcs. (10, 20, 30, 30, 100 mm) Interchangeable contact point (**21JAA226**)	**1162A** for Depth Gage (Back plunger type)

• Parallelism adjustment with the bottom face of the base is required when mounting a flat contact point such as the flat/needle or carbide-tipped contact point.

D

DIMENSIONS

Unit: mm

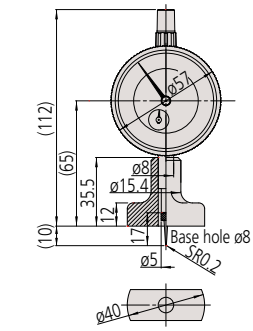

7210A

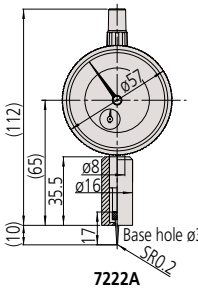

7222A

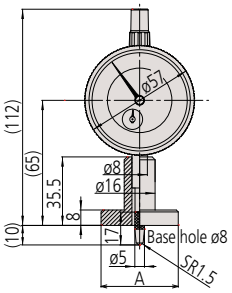

7223A A=ø25 mm
7224A A=ø40 mm

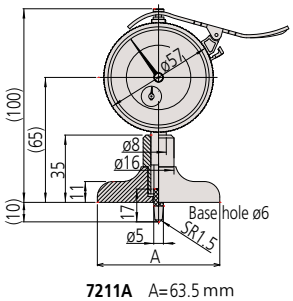

7211A A=63.5 mm
7212A A=101.6 mm

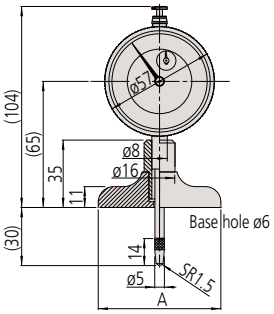

7213A, 7217A A=63.5 mm
7214A, 7218A A=101.6 mm

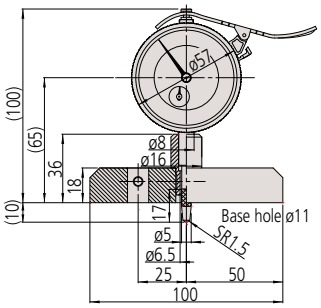

7220A

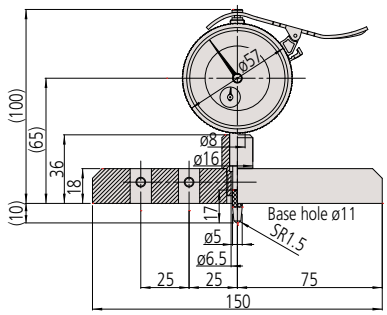

7221A

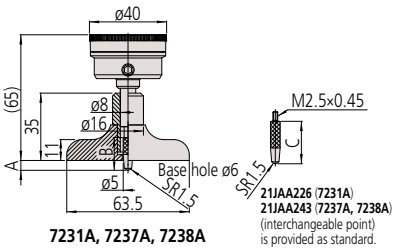

7231A, 7237A, 7238A

Order No.	A	B	C
7231A	(5)	17	22
7237A, 7238A	0.21 in	0.7 in	0.9 in

Mitutoyo

Featured Products

81 piece, Inch, Rectangular, Steel Gage Block Set

Gage Block Sets - Steel and Ceramic - Inch and Metric

Refer to page E-6 for details.

GBCD-250 - Long Range Gage Block Comparator

Manual and Automated Gage Block Calibration Machines

Refer to page E-25 for details.

Digital Height Master - Staggered - Various Sizes

Refer to page E-27 for details.

Calibration Masters - High Precision Square

Refer to page E-33 for details.

E

Small Tool Instruments and Reference Gages

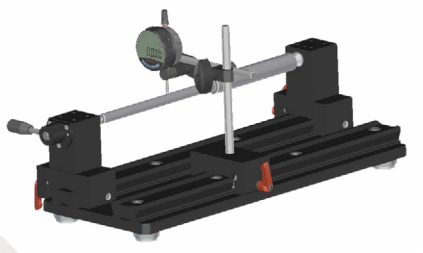

Fixtures - Bench Centers

Refer to page E-46 for details.

Hardware - Pitch Gages

Refer to page E-43 for details.

Granite Surface Plates and Stands

Refer to page E-47 for details.

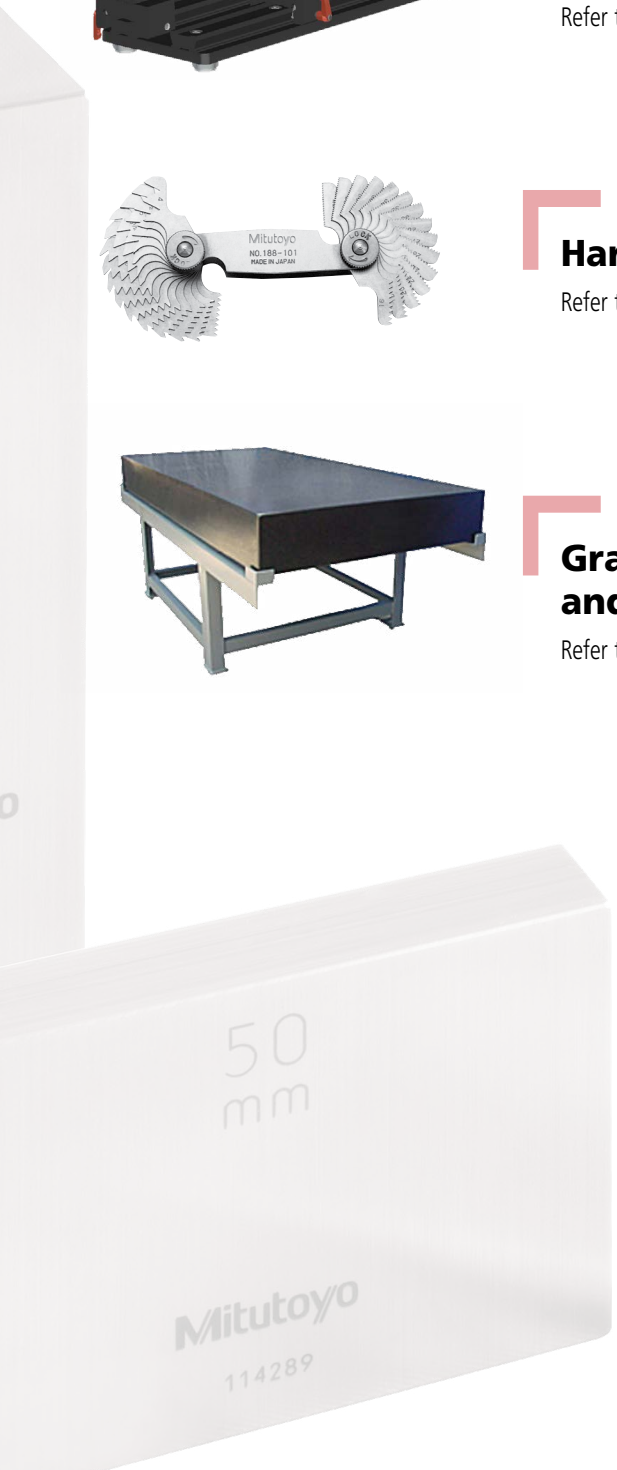

Measuring Instruments Shipped with Inspection Certificate

Mitutoyo guarantees product quality as a leading precision measuring instrument manufacturer and ships measuring instruments with an inspection certificate that includes inspection data so that customers can use them with confidence.

INDEX

Gage Blocks

Inch Rectangular Gage Block Set	E-6
Metric Rectangular Gage Block Set	E-7,8
Micrometer Inspection Gage Block Sets	E-9
Individual Metric Rectangular Gage Block	E-10,11
Individual Inch Rectangular Gage Block	E-12
Rectangular Gage Block with CTE	E-13
Zero CERA Blocks	E-13
Rectangular Gage Block Accessories	E-14-16
Metric Square Gage Block Set	E-17
Inch Square Gage Block Set	E-18
Individual Metric Square Gage Block	E-19
Individual Inch Square Gage Block	E-20
Square Gage Block Accessories	E-21,22
Ceraston, Arkansas Stone	E-23
Maintenance Kit for Gage Block	E-23
Step Master	E-24
Made-to-Order Block & Reference	E-24
Gage Block Comparator GBCD-250	E-25
Gage Block Comparator GBCD-100A	E-25

Height Masters & Check Masters

Height Master	E-26
Digital Height Master	E-27
Universal Height Master	E-28
Riser Blocks	E-29
Auxiliary Block Kit	E-29
High-Accuracy Check Master HMC-H	E-30
Square Master	E-31

Reference Gages, Hardware & Fixtures

Standard Scales	E-32
Working Standard Scales	E-32
High-Precision Square	E-33
Tachometers	E-34
Zero-IT, Zero-Setter, Straight Edges	E-35
Precision Vices & Sine Plates	E-36
Steel Rules	E-37,38
Thickness/Feeler Gages	E-39
Protractors	E-40,41
Digital Protractor	E-42
Radius & Pitch Gages	E-43,44
Shaft Measuring Kits	E-45
Bench Center	E-46

Granite Surface Plates

Black Granite Surface Plate	E-47,48
Steel Stands	E-47,78

Mitutoyo

Gage Blocks

SERIES 516

Precision gage blocks are the primary standards vital to dimensional quality control in the manufacture of parts. Mitutoyo offers a complete selection of gage blocks available in a choice of rectangular or square, metric or inch and steel or CERA (ceramic) types.

Accuracy

Mitutoyo gage blocks deliver the accuracy and reliability required for confidence in calibration and measurement applications. Mitutoyo has established a traceability system for our measurement products, up to the Metrology Management Center of the National Institute of Advanced Industrial Science and Technology (AIST), and we have been certified by the Japanese government as an accredited laboratory.

Wringing

The lapping technique is one of several Mitutoyo specialties. Our advanced lapping technique, developed for more than a half century, allows us to achieve the best flatness and surface roughness needed for gage blocks.

E

Abrasion Resistance and Dimensional Stability

High-carbon, high-chrome steel is employed to sufficiently satisfy a variety of material characteristics required for gage blocks. A high degree of hardness, obtained by our heat treatment technology, as well as methodically repeated heat treatment, have successfully reduced deterioration change over time.

CERA Blocks

CERA blocks, made of ceramic materials with superior surface quality, were developed by Mitutoyo ultra-precision machining techniques and solves problems commonly associated with steel gage blocks.

1. Corrosion Resistant
Anti-corrosion treatment is not required when handled normally (i.e. with fingers), resulting in simple maintenance and storage.

2. No Burrs Caused by Dents, etc.
Since the CERA Block is very hard it will not scratch and is highly resistant to burrs. If a burr is formed, it can easily be removed with a ceramic deburring stone (Ceraston).

3. Abrasion Resistant
CERA Blocks have 10 times the abrasion resistance of steel gage blocks.

4. Dimensional Stability
CERA Blocks are free from dimensional change over time.

5. Marking
The black characters, indicating the nominal length, are inscribed by laser and are clearly visible against the white surface of the block.

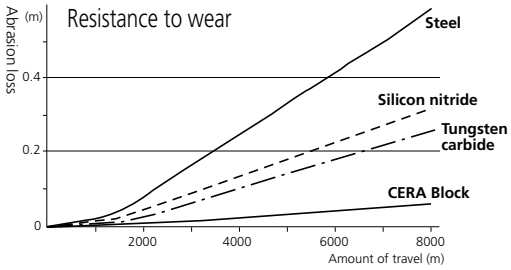

Selecting Gage Blocks

- Select gage blocks in accordance with the combination range required. If a large length is required, add a long block set.
- Select gage blocks in accordance with the minimum length step required. Add wear block sets if necessary.
- If a set containing a large number of gage blocks is selected, the number of combination gage blocks required for a length is reduced and the number of combinations is increased. The accuracy will be retained and damage will be reduced.
- The specific gage block set for micrometer inspection and caliper inspection is available.
- If using only one length repeatedly, it is a good idea to purchase discrete gage blocks.
- The 2mm-based gage blocks, which take the base of the minimum length step as 2mm, are easy to handle and will not warp, as compared to the 1mm-based gage blocks.

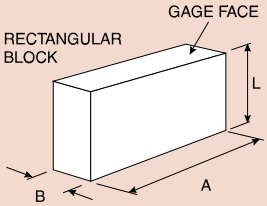

Rectangular Block

Gage Size	Face Width (A)	Face Depth (B)
Up to 2″	1.181″	.355″
Over .2″ up to 40″	1.378″	.355″
Up to 10mm	30mm	9mm
Over 10mm up to 1000mm	35mm	9mm

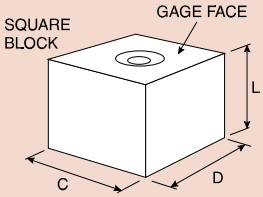

Square Block

Gage Size	Face Width (C)	Face Depth (D)
Inch (up to 40″)	.95″	.95″
Metric (up to 1000mm)	24.1mm	24.1mm

Find a Distributor

Grade and Application

Refer to the following table to select the gage block grade according to usage.

	Applications	Grade
Workshop use	• Mounting tools and cutters	AS-1 or AS-2
	• Manufacturing gages • Calibrating instruments	0 or AS-1
Inspection use	• Inspecting mechanical parts, tools, etc.	0 or AS-1
	• Checking the accuracy of gages • Calibrating instruments	00 or 0
Calibration use	• Checking the accuracy of gage blocks for workshop • Checking the accuracy of gage blocks for inspection • Checking the accuracy of instruments	K or 00
Reference use	• Checking the accuracy of gage blocks for calibration • For academic research	K

Grade AS-1:
These gage blocks are intended for shop-floor use to set and calibrate fixtures, as well as precision instruments.

Grade 0:
This grade is used within an inspection area to verify the accuracy of plug and snap gages, as well as for setting electronic measuring devices.

Grade 00:
These higher accuracy gages are intended for use within a controlled environment by skilled inspection staff. Mainly used as reference standards for setting high-precision measuring equipment and for the calibration of lower grade gage blocks.

Grade K:
Gage blocks of this accuracy are intended for use within a temperature-controlled inspection room or calibration laboratory. They should be used as masters with certificates against other gage blocks which are calibrated by comparison.

Combination of a Required Length

Multiple combinations of gage blocks can be used to make a required length. Care should be exercised in the following points.

1. Use as few gage blocks as possible to obtain the required length. (Select thick gage blocks whenever possible.)
2. Select gage blocks starting with the one that has the least significant digit required, and then work up to ones with more significant digits.
3. There are multiple combinations for the integer part of a length. To prevent wear as much as possible, do not always use the same gage blocks.

Example combination
Required length = 45.6785mm

For the 1mm-based gage block set (112 pcs.)

1.0005
1.008
1.17
17.5
\+ 25
45.6785mm

For the 2mm-based gage block set (112 pcs.)

2.0005
2.008
2.17
14.5
\+ 25
45.6785mm

6. Anti-Magnetic Nature Keeps Away Steel Powders

7. High Wringing Force
An even, dense tissue can maintain a strong wringing force.

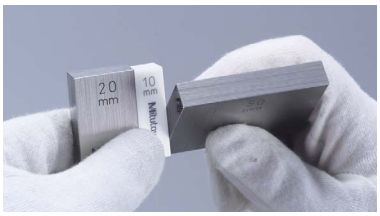

8. Material of CERA block

Property \ Material	CERA Block (ZrO^2)	Steel (Fe)	Carbide (WC-Co)	Silicon nitride (Si^3N^4)
Hardness (HV)	1350	800	1650	1500
Coefficient of thermal expansion (10^{-6}/K)	9.3±0.5	10.8±0.5	5.5±1.0	2
Flexural strength by 3-point bending (MPa)	1270	1960	1960	580
Fracture toughness K1c (MPa•$m^{1/2}$)	7	120	12	6.5
Young's Modulus x104 (MPa)	20.6	20.6	61.8	28.4
Poisson's Ratio	0.3	0.3	0.2	0.3
Specific gravity	6.0	7.8	14.8	3.2
Thermal conductivity (W/m•k)	2.9	54.4	79.5	16.7

9. Closest Expansion Coefficient to Steel
The thermal expansion coefficient of a CERA Block is similar to that of a steel gage block.

10. Highly Resistant Against Drops and Other Shocks
The CERA block material is one of the toughest ceramics materials. It is extremely difficult to crack under normal use.

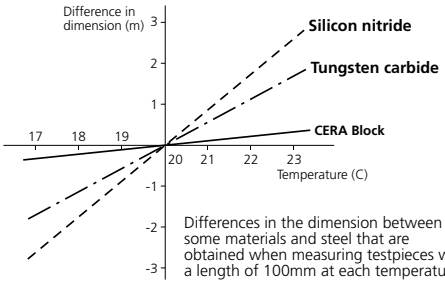

Differences in the dimension between some materials and steel that are obtained when measuring testpieces with a length of 100mm at each temperature.

Features of Square Gage Blocks

1. Perfect wringing is possible using the center hole.
After wringing the square gage blocks, an optional tie rod can be inserted through the center hole to fix the blocks using a screw.

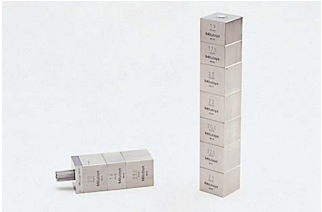

2. A height reference standard can easily be made.
A precision height reference standard can be made easily and inexpensively using accessories such as the plain jaw and block base.

3. A dedicated inspection jig can be easily made.
A dedicated inspection jig for periodic inspection of instruments can be made easily and inexpensively.

4. A wide measuring surface with cross section dimensions of [24.1 x 24.1mm / .95 x .95"] is available.
A square gage block can retain stable orientation both longitudinally and laterally. A wide range of application measurements can be made, including cutting tool positioning, angle measurement with a sine bar, taper measurement with a roller, and inspection of depth micrometers.

Long and Ultra-Thin Gage Blocks

Mitutoyo offers extra thin gage blocks from 0.10 mm to 0.99 mm (increments of 0.01 mm), as well as long gage blocks up to 1,000 mm as standard products.

Gage Blocks

SERIES 516

Accuracies of Mitutoyo Gage Blocks

All Mitutoyo gage blocks meet or exceed all known specifications. The flatness, parallelism and surface finish necessary to achieve the required accuracies are the same as or better than government requirements.

ASME (American Society of Mechanical Engineers) Deviations and Tolerance on Length for Metric and inch Gage Blocks: ASME B89.1.9-2023 (USA)

Nominal Length (l_n) in inches	Calibration Grade K		Grade 00		Grade 0		Grade AS-1		Grade AS-2	
	Limit Deviations of Length at any Point ± t_e µin.	Tolerance for the Variation In Length t_v µin.	Limit Deviations of Length at any Point ± t_e µin.	Tolerance for the Variation In Length t_v µin.	Limit Deviations of Length at any Point ± t_e µin.	Tolerance for the Variation In Length t_v µin.	Limit Deviations of Length at any Point ± t_e µm	Tolerance for the Variation In Length t_v µm	Limit Deviations of Length at any Point ± t_e µin.	Tolerance for the Variation In Length t_v µin.
$l_n \le .05$	12	2	4	2	6	4	12	6	24	12
$.05 < l_n \le 0.4$	10	2	3	2	5	4	8	6	18	12
$0.4 < l_n \le 1$	12	2	3	2	6	4	12	6	24	12
$1 < l_n \le 2$	16	2	4	2	8	4	16	6	32	12
$2 < l_n \le 3$	20	2	5	3	10	4	20	6	40	14
$3 < l_n \le 4$	24	3	6	3	12	5	24	8	48	14
$4 < l_n \le 5$	32	3	8	3	16	5	32	8	64	16
$5 < l_n \le 6$	32	3	8	3	16	5	32	8	64	16
$6 < l_n \le 7$	40	4	10	4	20	6	40	10	80	16
$7 < l_n \le 8$	40	4	10	4	20	6	40	10	80	16
$8 < l_n \le 10$	48	4	12	4	24	6	48	10	104	18
$10 < l_n \le 12$	56	4	14	4	28	7	56	10	112	20
$12 < l_n \le 16$	72	5	18	5	36	8	72	12	144	20
$16 < l_n \le 20$	88	6	20	6	44	10	88	14	176	24
$20 < l_n \le 24$	104	6	25	6	52	10	104	16	200	28
$24 < l_n \le 28$	120	7	30	7	60	12	120	18	240	28
$28 < l_n \le 32$	136	8	34	8	68	12	136	20	260	32
$32 < l_n \le 36$	152	8	38	8	76	14	152	20	300	36
$36 < l_n \le 40$	160	10	40	10	80	16	168	24	320	40

Nominal Length (l_n) in mm	Calibration Grade K		Grade 00		Grade 0		Grade AS-1		Grade AS-2	
	Limit Deviations of Length at any Point ± t_e µm	Tolerance for the Variation In Length t_v µm	Limit Deviations of Length at any Point ± t_e µm	Tolerance for the Variation In Length t_v µm	Limit Deviations of Length at any Point ± t_e µm	Tolerance for the Variation In Length t_v µm	Limit Deviations of Length at any Point ± t_e µm	Tolerance for the Variation In Length t_v µm	Limit Deviations of Length at any Point ± t_e µm	Tolerance for the Variation In Length t_v µm
$l_n \le 0.5$	0.30	0.05	0.10	0.05	0.14	0.10	0.30	0.16	0.60	0.30
$0.5 < l_n \le 10$	0.20	0.05	0.07	0.05	0.12	0.10	0.20	0.16	0.45	0.30
$10 < l_n \le 25$	0.30	0.05	0.07	0.05	0.14	0.10	0.30	0.16	0.60	0.30
$25 < l_n \le 50$	0.40	0.06	0.10	0.06	0.20	0.10	0.40	0.18	0.80	0.30
$50 < l_n \le 75$	0.50	0.06	0.12	0.06	0.25	0.12	0.50	0.18	1.00	0.35
$75 < l_n \le 100$	0.60	0.07	0.15	0.07	0.30	0.12	0.60	0.20	1.20	0.35
$100 < l_n \le 150$	0.80	0.08	0.20	0.08	0.40	0.14	0.80	0.20	1.60	0.40
$150 < l_n \le 200$	1.00	0.09	0.25	0.09	0.50	0.16	1.00	0.25	2.00	0.40
$200 < l_n \le 250$	1.20	0.10	0.30	0.10	0.60	0.16	1.20	0.25	2.40	0.45
$250 < l_n \le 300$	1.4	0.10	0.35	0.10	0.70	0.18	1.40	0.25	2.80	0.50
$300 < l_n \le 400$	1.80	0.12	0.45	0.12	0.90	0.20	1.80	0.30	3.60	0.50
$400 < l_n \le 500$	2.20	0.14	0.50	0.14	1.10	0.25	2.20	0.35	4.40	0.60
$500 < l_n \le 600$	2.60	0.16	0.65	0.16	1.30	0.25	2.60	0.40	5.00	0.70
$600 < l_n \le 700$	3.00	0.18	0.75	0.18	1.50	0.30	3.00	0.45	6.00	0.70
$700 < l_n \le 800$	3.40	0.20	0.85	0.20	1.70	0.30	3.40	0.50	6.50	0.80
$800 < l_n \le 900$	3.80	0.20	0.95	0.20	1.90	0.35	3.80	0.50	7.50	0.90
$900 < l_n \le 1000$	4.20	0.25	1.00	0.25	2.00	0.40	4.20	0.60	8.00	1.00

Mitutoyo Gage Blocks and Inspection Certificates

A Certificate of Inspection is furnished with all Mitutoyo gage blocks with a serial number on the case and an identification number on each block. The deviation of each block is registered. For this inspection, each gage block is measured relative to the upper level master using a gage block comparator. Grade K gage blocks are manufactured by absolute measurement using an interferometer. The gage block set and discrete gage blocks are supplied with a Certificate of Calibration. The Certificate of Calibration specifies the deviation from the nominal length. (Comparative measurement, however, is performed for all square gage blocks.)

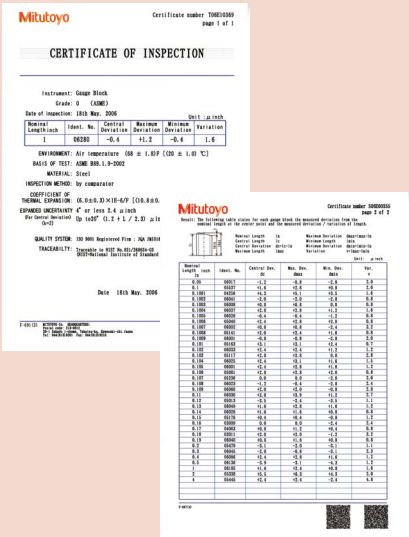
Mitutoyo

CERTIFICATE OF INSPECTION

Mitutoyo

A Certificate of Accuracy, traceable to the NIST, is furnished with each gage block set and individual block.

Mitutoyo America Corporation Calibration Laboratory:

ISO 17025:2017 accredited calibration available
Calibration capability up to 1000mm/40" length
Low measurement uncertainty

Contact Information:
965 Corporate Blvd.
Aurora, Illinois 60502
Phone: (888) 648-8869 option 7
Fax: (630) 978-6477

Find a Distributor

E

Inch Rectangular Gage Block Set
SERIES 516 — Inch Block Set, Thin Block Set, Long Block Set, Wear Block Set

Provided with Inspection Certificate

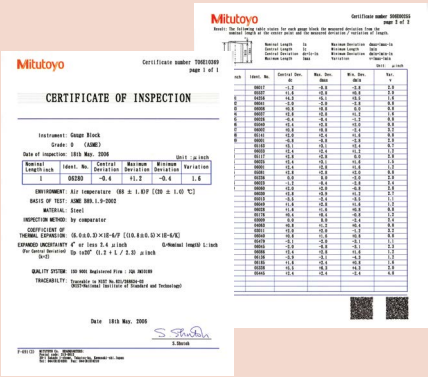

SPECIFICATIONS

Inch Block Set

Blocks per set	Order No. Steel	Order No. CERA	Order No. Steel/CERA	Grade	Blocks included in set Size	Step	Qty.
81	516-549-56	516-557-56	—	K	.1001 – .1009	.0001	9
	516-901-26	516-301-26	—	00	.101 – .149	.001	49
	516-902-26	516-302-26	—	0	.05 – .95	.05	19
	516-903-26	516-303-26	—	AS-1	1 - 4	1	4
	516-904-26	516-304-26		AS-2			
35	516-550-56	516-558-56	—	K	.10005		1
	516-913-26	516-313-26	—	00	.1001 – .1009	.0001	9
	516-914-26	516-314-26	—	0	.101 – .109	.001	9
	516-915-26	516-315-26	—	AS-1	.11 – .19	.01	9
	516-916-26	516-316-26	—	AS-2	.1 - .3	.1	3
					.5, 1, 2, 4		4

Thin Block Set

Blocks per set	Order No. Steel	Order No. CERA	Grade	Blocks included in set Size	Step	Qty.
28	516-551-56	—	K	.02005		1
	516-917-26	—	00	.0201 – .0209	.0001	9
	516-918-26	—	0	.021 – .029	.001	9
	516-919-26	—	AS-1	.01 – .09	.01	9
	516-920-26	—	AS-2			
10	516-926-26	—	0	.005 - .050	.005	10
	516-927-26	—	AS-1			

Long Block Set

Blocks per set	Order No. Steel	Order No. CERA	Grade	Blocks included in set Size	Step	Qty.
8	516-126-26	516-176-26	0	1-8	1	8
	516-127-26	516-177-26	AS-1			
8	—	516-564-56	K	5 - 7	1	3
	—	516-741-26	00	8, 10, 12	2	3
	516-712-26	516-742-26	0	16, 20	4	2
	516-713-26	516-743-26	AS-1			

Wear Block Set

Blocks per set	Order No. Carbide	Order No. CERA	Grade	Blocks included in set Size	Qty.
2	516-809-26	516-836-26	0	.05	2
	516-808-26	516-837-26	AS-1		
2	516-805-26	516-834-26	0	.1	2
	516-804-26	516-835-26	AS- 1		

Gage Blocks

Metric Rectangular Gage Block Set
SERIES 516 — 1mm Base Block Set

Steel 112-block set

Steel 103-block set

Steel 47-block set

CERA 112-block set

CERA 56-block set

E

Provided with Inspection Certificate

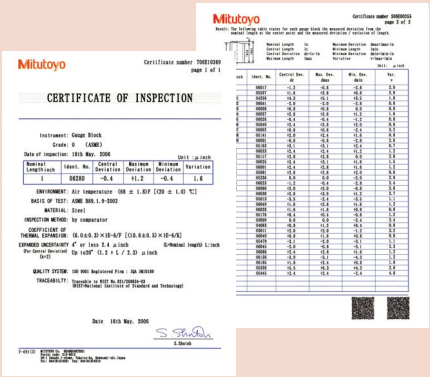

Mitutoyo

CERTIFICATE OF INSPECTION

SPECIFICATIONS

1mm Base Block Set

Blocks per set	Order No. Steel	Order No. CERA	Grade	Blocks included in set Size	Step	Qty.
112	516-531-56	516-541-56	K	1.0005	—	1
	516-937-26	516-337-26	00	1.001 - 1.009	0.001	9
	516-938-26	516-338-26	0	1.01 - 1.49	0.01	49
	516-939-26	516-339-26	AS-1	0.5 - 24.5	0.5	49
	516-940-26	516-340-26	AS-2	25 - 100	25	4
103	516-533-56	516-542-56	K	1.005	—	1
	516-941-26	516-341-26	00	1.01 - 1.49	0.01	49
	516-942-26	516-342-26	0	0.5 - 24.5	0.5	49
	516-943-26	516-343-26	AS-1	25 - 100	25	4
	516-944-26	516-344-26	AS- 2			
87	516-535-56	515-543-56	K	1.001 - 1.009	0.001	9
	516-945-26	516-345-26	00	1.01 - 1.49	0.01	49
	516-946-26	516-346-26	0	0.5 - 9.5	0.5	19
	516-947-26	516-347-26	AS-1	10 - 100	10	10
	516-948-26	516-348-26	AS- 2			
56	516-536-56	516-544-56	K	0.5	—	1
	516-953-26	516-353-26	00	1.001 - 1.009	0.001	9
	516-954-26	516-354-26	0	1.01 - 1.09	0.01	9
	516-955-26	516-355-26	AS-1	1.1 - 1.9	0.1	9
	516-956-26	516-356-26	AS-2	1 - 24	1	24
				25 - 100	25	4
47	516-537-56	516-545-56	K	1.005	—	1
	516-957-26	516-357-26	00	1.01 - 1.09	0.01	9
	516-958-26	516-358-26	0	1.1 - 1.9	0.1	9
	516-959-26	516-359-26	AS-1	1 - 24	1	24
	516-960-26	516-360-26	AS-2	25 - 100	25	4

Got Questions?

Metric Rectangular Gage Block Set
SERIES 516 — Long Block Set, Wear Block Set

Provided with Inspection Certificate

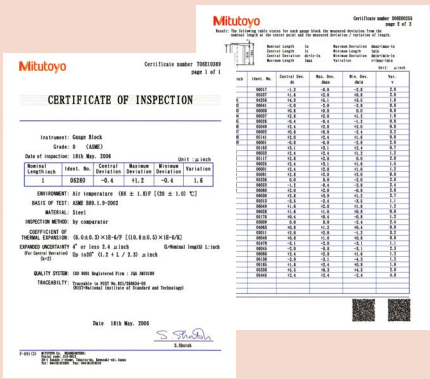
Mitutoyo

Certificate number 70001030
page 1 of 1

CERTIFICATE OF INSPECTION

Instrument: Gauge Block
Grade: 0 (ASME)
Date of inspection: 18th May. 2006
Unit : μ inch

Nominal Length inch	Ident. No.	Central Deviation	Maximum Deviation	Minimum Deviation	Variation
1	06280	-0.4	+1.2	-0.4	1.6

ENVIRONMENT: Air temperature (68 ± 1.8)F (20 ± 1.0) °C)
BASIS OF TEST: ASME B89.1.9-2002
MATERIAL: Steel
INSPECTION METHOD: by comparator
COEFFICIENT OF THERMAL EXPANSION: (6.0±0.3)×1E-6/F ((10.8±0.5)×1E-6/K)
EXPANDED UNCERTAINTY 4" or less 3.4 μ inch
For Center Derived (k=2) Up to20" (1.2 + L / 2.5) μ inch
G:Nominal length U: inch
QUALITY SYSTEM: ISO 9001 Registered Firm : JQA JM0189
TRACEABILITY: Traceable to NIST No.821/280604-00 (NIST:National Institute of Standard and Technology)

Date 18th May. 2006
S.Sheroh

Mitutoyo

Certificate number 30080030
page 2 of 2

Result: The following table states for each gauge block the measured deviation from the nominal length of the center point and the measured deviation / variation of length.

Nominal Length in
Central Deviation delta-in
Maximum Length lmax
Maximum Deviation dmax-lmax-in
Minimum Deviation dmin-in
Variation v=lmax-lmin

Unit : μ inch

inch	Ident. No.	Central Dev. dc	Max. Dev. dmax	Min. Dev. dmin	Var. v
	00017	-1.5	-0.8	-2.3	2.0
	00258	11.0	-1.0	-10.1	9.1
	00259	11.0	-1.0	-10.1	9.1
	00064	-2.0	-2.0	-2.0	0.0
	00058	10.0	-0.0	-9.0	9.0
	00037	12.0	12.0	11.1	1.0
	00038	12.0	12.0	11.1	1.0
	00040	12.1	-2.0	-12.0	9.9
	00002	10.0	10.0	-1.1	9.1
	00001	10.0	10.0	-1.1	9.1
	00101	12.0	-2.0	-11.0	9.0
	00103	12.1	-1.1	-11.0	9.9
	00032	7.1	-1.1	-8.1	7.0
	00117	12.0	12.0	-0.0	2.0
	00031	12.0	12.0	-0.0	2.0
	00003	12.1	-1.0	-11.0	1.0
	00001	12.0	12.0	-0.0	0.0
	00259	-1.0	0.0	-1.0	1.0
	00258	-1.0	0.0	-1.0	1.0
	00000	12.0	12.0	-0.0	2.0
	00000	12.0	12.0	-0.1	2.1
	00014	-1.1	-1.0	-1.1	1.1
	00015	-1.1	-1.0	-1.1	1.1
	00018	11.0	11.0	10.0	0.0
	00170	10.1	10.0	-1.0	1.0
	00000	-1.0	0.0	-1.1	1.1
	00003	10.0	11.0	10.1	0.9
	00004	10.0	11.0	10.1	0.9
	00049	10.0	11.0	10.1	0.9
	00479	-1.1	-1.0	-1.1	1.1
	00000	12.0	12.0	-0.1	2.1
	00000	12.0	12.0	-0.1	2.1
	00120	-1.0	-1.1	-1.2	1.2
	00120	-1.0	-1.1	-1.2	1.2
	00120	11.0	10.9	10.8	1.0
	00200	11.1	10.9	10.8	1.0
	00400	11.1	10.9	10.8	1.0

CERA 8-block set

Steel 8-block set

SPECIFICATIONS

Long Block Set

Blocks per set	Order No.		Grade	Blocks included in set		
	Steel	CERA	ASME	Size	Step	Qty.
8	—	516-547-56	K	25-200	25	8
	—	516-164-26	00	—	—	—
	516-115-26	516-165-26	0	—	—	—
	516-116-26	516-166-26	AS-1	—	—	—
8	516-540-56	516-546-56	K	125 - 175	25	3
	516-701-26	516-731-26	00	200 - 250	50	2
	516-702-26	516-732-26	0	300 - 500	100	3
	516-703-26	516-733-26	AS-1			

CERA 2-block set

Carbide 2-block

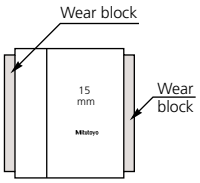

SPECIFICATIONS

Wear Block Set

Blocks per set	Order No.		Grade	Blocks included in set	
	Carbide	CERA	ASME	Size	Qty.
2	516-807-26	516-832-26	0	1	2
	516-806-26	516-833-26	AS-1		
2	516-803-26	516-830-26	0	2	2
	516-802-26	516-831-26	AS-1		

E

Gage Blocks

Micrometer Inspection Gage Block Sets SERIES 516

- Gage blocks for inspecting a variety of micrometers.
- Can be measured in both vertical and horizontal posture.
- Parallelism is measured by attaching the optical parallel (optional accessory) to the gage block set.

SPECIFICATIONS

Inch Block Set

Blocks per set	Order No. Steel	Order No. CERA	Grade	Blocks included in set
10	516-552-56 516-921-26 516-922-26 516-923-26	516-559-56 516-321-26 516-322-26 516-323-26	K 00 0 AS-1	.105, .210, .315, .420, .500, .605, .710, .815, .920, 1″ • Optical parallel (t = .5")
10	516-529-26*	516-319-26*	0	.087, .189, .307, .409, .472, .598, .669, .772, .890, 1" • Optical parallel (t = .5")
9	516-554-56 516-929-26 516-930-26 516-931-26	516-561-56 516-333-26 516-334-26 516-335-26	K 00 0 AS- 1	.0625, .100, .125, .200, .250, .300, .500, 1, 2″ • Optical parallel (t = .5")
9	— — 516-934-26 516-935-26	516-563-56 516-329-26 516-330-26 516-331-26	K 00 0 AS- 1	.0625, .100, .125, .200, .250, .300, .500, 1, 2″

Metric Block Set

Blocks per set	Order No. Steel	Order No. CERA	Grade	Blocks included in set
10	516-103-26 516-101-26	516-152-26 516-153-26	0 AS- 1	1.00, 1.25, 1.50, 2, 3, 5, 10, 15, 20, 25mm
10	516-106-26 516-107-26	516-156-26 516-157-26	0 AS-1	2.5, 5.1, 7.7, 10.3, 12.9, 15, 17.6, 20.2, 22.8, 25mm • Optical parallel (t = 12mm)

* For QuantuMike

Bore Gage Calibration Kit SERIES 516

SPECIFICATIONS

Blocks per set	Order No. Carbide	Grade	Blocks included in set Size
9	516-120-26	0	.04″, .08″, .16″, .2″, .4″, .8″, 1″, 2″, 3″ 619018 (plain jaw 2 pc. set) and 619004 (160mm holder)

SPECIFICATIONS

Inch/Metric Micro Checker (holder only)

Order No.	516-608
Applicable gage block set	516-921-26, 516-922-26, 516-923-26, 516-321-26, 516-322-26, 516-323-26
Applicable gage block size (inch)	.105, .210, .315, .420, .5, .605, .815, .920

Metric Micro Checker (holder only)

Order No.	516-607
Applicable gage block set	516-106-26, 516-107-26, 516-156-26, 516-157-26
Applicable gage block size (mm)	2.5, 5.1, 7.7, 10.3, 12.9, 15, 17.6, 20.2, 22.8, 25

PROPRIETARY INSPECTION CERTIFICATE

Provided with Inspection Certificate

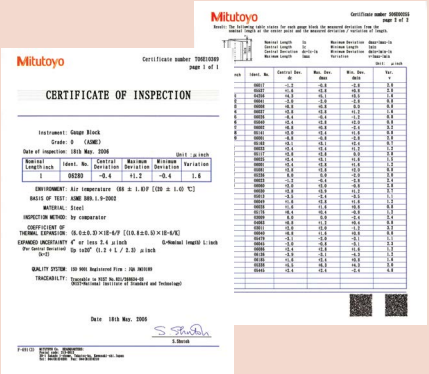

Micro Checker

(Gage blocks are optional.)

E

Individual Metric Rectangular Gage Block

- If using only one length repeatedly, it is good practice to purchase individual gage blocks.
- Each gage block is supplied with a Certificate of Inspection.
- Each Grade K gage block of ASME standard is specially supplied with a Certificate of Calibration, which certifies the gage block was manufactured via interferometry.
- If desired nominal is not listed, please contact customer service for availability.

Suffix Number for Selecting Standard and Certificate Provided

ASME

Grade	Steel, CERA
K	**-516****
00	**-521***
0	**-531***
AS-1	**-541***
AS- 2	**-551***

* provided with Inspection Certificate
** provided with Calibration Certificate and Inspection Certificate

Example: 611821-521
0.1mm gage block in grade 00.

We make custom length gage blocks:
0.1-1000mm

Inspection Certificate

SPECIFICATIONS

Metric Block

Length (mm)	Order No. Steel	Order No. CERA
0.1	**611821**	—
0.11	**611860**	—
0.12	**611861**	—
0.13	**611862**	—
0.14	**611863**	—
0.15	**611822**	—
0.16	**611864**	—
0.17	**611865**	—
0.18	**611866**	—
0.19	**611867**	—
0.2	**611823**	—
0.21	**611868**	—
0.22	**611869**	—
0.23	**611870**	—
0.24	**611871**	—
0.25	**611824**	—
0.26	**611872**	—
0.27	**611873**	—
0.28	**611874**	—
0.29	**611875**	—
0.3	**611825**	—
0.31	**611876**	—
0.32	**611877**	—
0.33	**611878**	—
0.34	**611879**	—
0.35	**611826**	—
0.36	**611880**	—
0.37	**611881**	—
0.38	**611882**	—
0.39	**611883**	—
0.4	**611827**	—
0.41	**611884**	—
0.42	**611885**	—
0.43	**611886**	—
0.44	**611887**	—
0.45	**611828**	—
0.46	**611888**	—
0.47	**611889**	—
0.48	**611890**	—
0.49	**611891**	—
0.5	**611506**	**613506**
0.51	**611892**	—
0.52	**611893**	—

Length (mm)	Order No. Steel	Order No. CERA
0.53	**611894**	—
0.54	**611895**	—
0.55	**611896**	—
0.56	**611897**	—
0.57	**611898**	—
0.58	**611899**	—
0.59	**611900**	—
0.6	**611901**	—
0.61	**611902**	—
0.62	**611903**	—
0.63	**611904**	—
0.64	**611905**	—
0.65	**611906**	—
0.66	**611907**	—
0.67	**611908**	—
0.68	**611909**	—
0.69	**611910**	—
0.7	**611911**	—
0.71	**611912**	—
0.72	**611913**	—
0.73	**611914**	—
0.74	**611915**	—
0.75	**611916**	—
0.76	**611917**	—
0.77	**611918**	—
0.78	**611919**	—
0.79	**611920**	—
0.8	**611921**	—
0.81	**611922**	—
0.82	**611923**	—
0.83	**611924**	—
0.84	**611925**	—
0.85	**611926**	—
0.86	**611927**	—
0.87	**611928**	—
0.88	**611929**	—
0.89	**611930**	—
0.9	**611931**	—
0.91	**611932**	—
0.92	**611933**	—
0.93	**611934**	—
0.94	**611935**	—
0.95	**611936**	—

Length (mm)	Order No. Steel	Order No. CERA
0.96	**611937**	—
0.97	**611938**	—
0.98	**611939**	—
0.99	**611940**	—
0.991	**611551**	**613551**
0.992	**611552**	**613552**
0.993	**611553**	**613553**
0.994	**611554**	**613554**
0.995	**611555**	**613555**
0.996	**611556**	**613556**
0.997	**611557**	**613557**
0.998	**611558**	**613558**
0.999	**611559**	**613559**
1	**611611**	**613611**
1.0005	**611520**	**613520**
1.001	**611521**	**613521**
1.002	**611522**	**613522**
1.003	**611523**	**613523**
1.004	**611524**	**613524**
1.005	**611525**	**613525**
1.006	**611526**	**613526**
1.007	**611527**	**613527**
1.008	**611528**	**613528**
1.009	**611529**	**613529**
1.01	**611561**	**613561**
1.02	**611562**	**613562**
1.03	**611563**	**613563**
1.04	**611564**	**613564**
1.05	**611565**	**613565**
1.06	**611566**	**613566**
1.07	**611567**	**613567**
1.08	**611568**	**613568**
1.09	**611569**	**613569**
1.1	**611570**	**613570**
1.11	**611571**	**613571**
1.12	**611572**	**613572**
1.13	**611573**	**613573**
1.14	**611574**	**613574**
1.15	**611575**	**613575**
1.16	**611576**	**613576**
1.17	**611577**	**613577**
1.18	**611578**	**613578**
1.19	**611579**	**613579**

Talk to Sales

Gage Blocks

Length (mm)	Order No. Steel	Order No. CERA
1.2	611580	613580
1.21	611581	613581
1.22	611582	613582
1.23	611583	613583
1.24	611584	613584
1.25	611585	613585
1.26	611586	613586
1.27	611587	613587
1.28	611588	613588
1.29	611589	613589
1.3	611590	613590
1.31	611591	613591
1.32	611592	613592
1.33	611593	613593
1.34	611594	613594
1.35	611595	613595
1.36	611596	613596
1.37	611597	613597
1.38	611598	613598
1.39	611599	613599
1.4	611600	613600
1.41	611601	613601
1.42	611602	613602
1.43	611603	613603
1.44	611604	613604
1.45	611605	613605
1.46	611606	613606
1.47	611607	613607
1.48	611608	613608
1.49	611609	613609
1.5	611641	613641
1.6	611516	613516
1.7	611517	613517
1.8	611518	613518
1.9	611519	613519
2	611612	613612
2.0005	611690	—
2.001	611691	—
2.002	611692	—
2.003	611693	—
2.004	611694	—
2.005	611695	—
2.006	611696	—
2.007	611697	—
2.008	611698	—
2.009	611699	—
2.01	611701	—
2.02	611702	—
2.03	611703	—
2.04	611704	—
2.05	611705	—
2.06	611706	—
2.07	611707	—
2.08	611708	—
2.09	611709	—
2.1	611710	—
2.11	611711	—
2.12	611712	—
2.13	611713	—
2.14	611714	—
2.15	611715	—
2.16	611716	—

Length (mm)	Order No. Steel	Order No. CERA
2.17	611717	—
2.18	611718	—
2.19	611719	—
2.2	611720	—
2.21	611721	—
2.22	611722	—
2.23	611723	—
2.24	611724	—
2.25	611725	—
2.26	611726	—
2.27	611727	—
2.28	611728	—
2.29	611729	—
2.3	611730	—
2.31	611731	—
2.32	611732	—
2.33	611733	—
2.34	611734	—
2.35	611735	—
2.36	611736	—
2.37	611737	—
2.38	611738	—
2.39	611739	—
2.4	611740	—
2.41	611741	—
2.42	611742	—
2.43	611743	—
2.44	611744	—
2.45	611745	—
2.46	611746	—
2.47	611747	—
2.48	611748	—
2.49	611749	—
2.5	611642	613642
2.6	611750	—
2.7	611751	—
2.8	611752	—
2.9	611753	—
3	611613	613613
3.5	611643	613643
4	611614	613614
4.5	611644	613644
5	611615	613615
5.1	611850	613850
5.5	611645	613645
6	611616	613616
6.5	611646	613646
7	611617	613617
7.5	611647	613647
7.7	611851	613851
8	611618	613618
8.5	611648	613648
9	611619	613619
9.5	611649	613649
10	611671	613671
10.3	611852	613852
10.5	611650	613650
11	611621	613621
11.5	611651	613651
12	611622	613622
12.5	611652	613652
12.9	611853	613853

Length (mm)	Order No. Steel	Order No. CERA
13	611623	613623
13.5	611653	613653
14	611624	613624
14.5	611654	613654
15	611625	613625
15.5	611655	613655
16	611626	613626
16.5	611656	613656
17	611627	613627
17.5	611657	613657
17.6	611854	613854
18	611628	613628
18.5	611658	613658
19	611629	613629
19.5	611659	613659
20	611672	613672
20.2	611855	613855
20.5	611660	613660
21	611631	613631
21.5	611661	613661
22	611632	613632
22.5	611662	613662
22.8	611856	613856
23	611633	613633
23.5	611663	613663
24	611634	613634
24.5	611664	613664
25	611635	613635
25.25	611754	613754
30	611673	613673
35	611755	613755
40	611674	613674
41.3	611857	613857
45	611756	613756
50	611675	613675
60	611676	613676
70	611677	613677
75	611801	613801
80	611678	613678
90	611679	613679
100	611681	613681
125	611802	613802
131.4	611858	613858
150	611803	613803
175	611804	613804
200	611682	613682
250	611805	613805
300	611683	613683
400	611684	613684
500	611685	613685
600	611840	—
700	611841	—
750	611842	—
800	611843	—
900	611844	—
1000	611845	—

Metric Wear Block

Length (mm)	Order No. Tungsten carbide
1	612611
2	612612

DIMENSIONS

Unit: mm

Nominal length: 0.1mm - 5.5mm

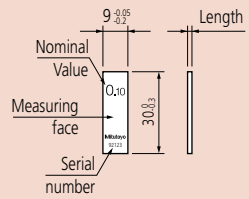

Nominal length: 6mm - 10mm

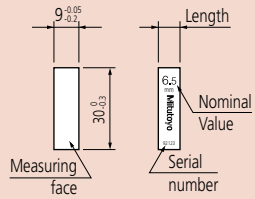

Nominal length: 10.3mm - 100mm

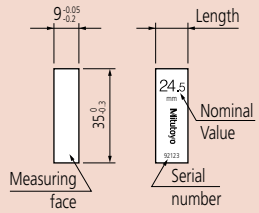

Nominal length 125mm - 1000mm

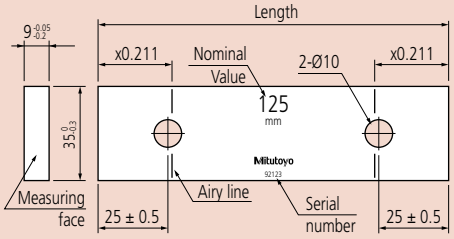

Need Repair?

Suffix Number for Selecting Standard and Certificate Provided

ASME

Grade	Steel, CERA
K	**-516****
00	**-521***
0	**-531***
AS-1	**-541***
AS-2	**-551***

* provided with Inspection Certificate
** provided with Calibration Certificate and Inspection Certificate

Example: 611310-521
.1" gage block in grade 00.

We make custom length gage blocks:
.004 - 20"

DIMENSIONS

Unit: Inch

Nominal length:
.004 - .25"

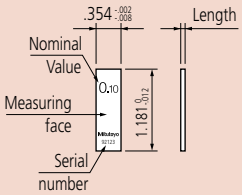

Nominal length:
.3 - 4"

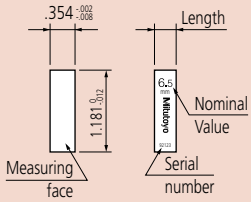

Nominal length:
.45 - 4"

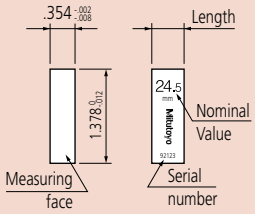

Nominal length 5 - 20"

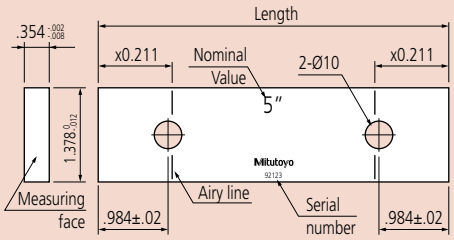

Individual Inch Rectangular Gage Block

• If desired nominal is not listed, please contact customer service for availability.

SPECIFICATIONS

Inch Block

Length (inch)	Order No. Steel	Order No. CERA
.004	**611304**	—
.005	**611305**	—
.006	**611306**	—
.007	**611307**	—
.008	**611308**	—
.009	**611309**	—
.01	**611310**	—
.011	**611311**	—
.012	**611312**	—
.013	**611313**	—
.014	**611314**	—
.015	**611315**	—
.016	**611316**	—
.017	**611317**	—
.018	**611318**	—
.019	**611319**	—
.02	**611320**	—
.02005	**611240**	—
.0201	**611231**	—
.0202	**611232**	—
.0203	**611233**	—
.0204	**611234**	—
.0205	**611235**	—
.0206	**611236**	—
.0207	**611237**	—
.0208	**611238**	—
.0209	**611239**	—
.021	**611321**	—
.022	**611322**	—
.023	**611323**	—
.024	**611324**	—
.025	**611325**	—
.026	**611326**	—
.027	**611327**	—
.028	**611328**	—
.029	**611329**	—
.03	**611330**	—
.031	**611331**	—
.03125 (1/32)	**611101**	**613103**
.032	**611332**	—
.033	**611333**	—
.034	**611334**	—
.035	**611335**	—
.036	**611336**	—
.037	**611337**	—
.038	**611338**	—
.039	**611339**	—
.04	**611340**	—
.041	**611341**	—
.042	**611342**	—
.043	**611343**	—
.044	**611344**	—
.045	**611345**	—
.046	**611346**	—
.046875 (3/64)	**611102**	**613104**
.047	**611347**	—
.048	**611348**	—
.049	**611349**	—
.05	**611105**	**613105**

Length (inch)	Order No. Steel	Order No. CERA
.06	**611106**	—
.0625	**611303**	**613303**
.07	**611107**	—
.078125 (5/64)	**611103**	**613100**
.08	**611108**	—
.09	**611109**	—
.09375 (3/32)	**611104**	**613101**
.1	**611191**	**613191**
.100025	**611111**	**613110**
.10005	**611135**	**613135**
.100075	**611112**	**613111**
.1001	**611121**	**613121**
.1002	**611122**	**613122**
.1003	**611123**	**613123**
.1004	**611124**	**613124**
.1005	**611125**	**613125**
.1006	**611126**	**613126**
.1007	**611127**	**613127**
.1008	**611128**	**613128**
.1009	**611129**	**613129**
.101	**611141**	**613141**
.102	**611142**	**613142**
.103	**611143**	**613143**
.104	**611144**	**613144**
.105	**611145**	**613145**
.106	**611146**	**613146**
.107	**611147**	**613147**
.108	**611148**	**613148**
.109	**611149**	**613149**
.109375 (7/64)	**611110**	**613102**
.11	**611150**	**613150**
.111	**611151**	**613151**
.112	**611152**	**613152**
.113	**611153**	**613153**
.114	**611154**	**613154**
.115	**611155**	**613155**
.116	**611156**	**613156**
.117	**611157**	**613157**
.118	**611158**	**613158**
.119	**611159**	**613159**
.12	**611160**	**613160**
.121	**611161**	**613161**
.122	**611162**	**613162**
.123	**611163**	**613163**
.124	**611164**	**613164**
.125	**611165**	**613165**
.126	**611166**	**613166**
.127	**611167**	**613167**
.128	**611168**	**613168**
.129	**611169**	**613169**
.13	**611170**	**613170**
.131	**611171**	**613171**
.132	**611172**	**613172**
.133	**611173**	**613173**
.134	**611174**	**613174**
.135	**611175**	**613175**
.136	**611176**	**613176**
.137	**611177**	**613177**
.138	**611178**	**613178**

Length (inch)	Order No. Steel	Order No. CERA
.139	**611179**	**613179**
.14	**611180**	**613180**
.141	**611181**	**613181**
.142	**611182**	**613182**
.143	**611183**	**613183**
.144	**611184**	**613184**
.145	**611185**	**613185**
.146	**611186**	**613186**
.147	**611187**	**613187**
.148	**611188**	**613188**
.149	**611189**	**613189**
.15	**611115**	**613115**
.16	**611116**	**613116**
.17	**611117**	**613117**
.18	**611118**	**613118**
.19	**611119**	**613119**
.2	**611192**	**613192**
.21	**611221**	**613221**
.25	**611212**	**613212**
.3	**611193**	**613193**
.315	**611209**	**613209**
.35	**611213**	**613213**
.375 (3/8)	**611113**	**613112**
.4	**611194**	**613194**
.420	**611210**	**613210**
.45	**611214**	**613214**
.5	**611195**	**613195**
.55	**611215**	**613215**
.6	**611196**	**613196**
.605	**611211**	**613211**
.65	**611216**	**613216**
.7	**611197**	**613197**
.710	**611220**	**613220**
.75	**611217**	**613217**
.8	**611198**	**613198**
.815	**611226**	**613226**
.85	**611218**	**613218**
.9	**611199**	**613199**
.920	**611227**	**613227**
.95	**611219**	**613219**
1	**611201**	**613201**
2	**611202**	**613202**
3	**611203**	**613203**
4	**611204**	**613204**
5	**611205**	**613205**
6	**611206**	**613206**
7	**611207**	**613207**
8	**611208**	**613208**
10	**611222**	**613222**
12	**611223**	**613223**
16	**611224**	**613224**
20	**611225**	**613225**

Inch Wear Block

Length (inch)	Order No. Tungsten carbide
.05	**612105**
.1	**612191**

E

Mitutoyo

Gage Blocks

Rectangular Gage Block with CTE
Gage Blocks with Thermal Expansion Coefficient Data

- Mitutoyo offers top-level gage blocks (steel and ceramic) which are superior to K class blocks.

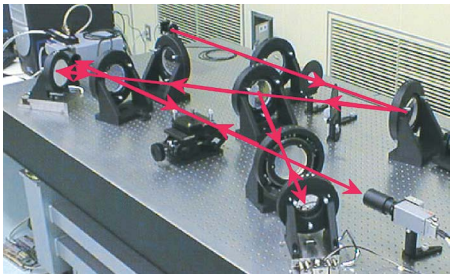

Double-faced interferometer (DFI)

- Comes with a highly accurate thermal expansion coefficient measured with a high-accuracy double-faced interferometer (DFI).
- The high-accuracy gage block interferometer (GBI) guarantees high dimensional accuracy.
- Mitutoyo offers rectangular gage blocks, having nominal values from 100 to 500mm

  Grade: K class in ASME

  Uncertainty of thermal expansion coefficient:

  0.035×10^{-6}/K (k = 2)

  Uncertainty of dimension measurement:

  30nm (k = 2), for 100mm block

Provided with Inspection Certificate

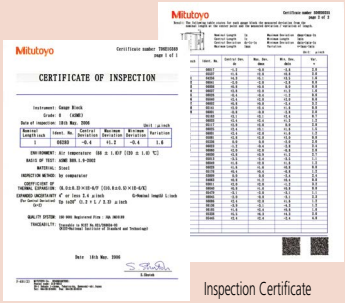

Inspection Certificate

E

SPECIFICATIONS

Inch Block with CTE

Length (inch)	Order No. Steel	Order No.CERA
4	611204-51B	613204-51B
5	611205-51B	613205-51B
6	611206-51B	613206-51B
7	611207-51B	613207-51B
8	611208-51B	613208-51B
10	611222-51B	613222-51B
12	611223-51B	613223-51B
16	611224-51B	613224-51B
20	611225-51B	613225-51B

Metric Block with CTE

Length (mm)	Order No. Steel	Order No. CERA
100	611681-51B	613681-51B
125	611802-51B	613802-51B
150	611803-51B	613803-51B
175	611804-51B	613804-51B
200	611682-51B	613682-51B
250	611805-51B	613805-51B
300	611683-51B	613683-51B
400	611684-51B	613684-51B
500	611685-51B	613685-51B

ZERO CERA Blocks

- Thermal expansion in the temperature range 20±1°C less than 1/500 that of steel ($0 \pm 0.02 \times 10^{-6}$/K(20°C))
- Almost no secular change both in dimension and coefficient of thermal expansion

- Complementary ultra-low thermal expansion and high specific rigidity (Young's Modulus/specific gravity)

SPECIFICATIONS

Metric Blocks

Order No.			Length (mm)
JIS/ISO/DIN	BS	ASME	
617673-016	617673-116	617673-516	30
617675-016	617675-116	617675-516	50
617681-016	617681-116	617681-516	100
617682-016	617682-116	617682-516	200
617683-016	617683-116	617683-516	300
617684-016	617684-116	617684-516	400
617685-016	617685-116	617685-516	500
617840-016	617840-116	617840-516	600
617841-016	617841-116	617841-516	700
617843-016	617843-116	617843-516	800
617844-016	617844-116	617844-516	900
617845-016	617845-116	617845-516	1000
516-771-60	516-771-61	516-771-66	Above set

Where to Buy

Rectangular Gage Block Accessories
SERIES 516 – For Gage Blocks over 100mm

- Specially designed for long gage blocks over 100mm, which have two holes on the body for coupling.

516-605

SPECIFICATIONS

Accessories for gage blocks over 100mm

Order No. 516-605	Included in set
1 pc.	Holder A (**619031**)
1 pc.	Holder B (**619032**)
1 pc.	Holder C (**619033**)
1 pc.	Holder D (**619034**)
1 pc.	Holder E (**619035**)
3 pcs.	Adaptor (**619036**)
1 pc.	Holder base 35mm (**619009**)
2 pcs.	Half round jaw 12mm (**619013**)
1 pc.	Plain jaw (2 pc. set) (**619018**)
1 pc.	Scriber point (**619019**)

Note: These accessories can be used for inch rectangular gage blocks.

Holder A: **619031**
Used for coupling two long gage blocks.

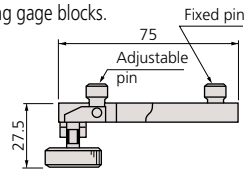

Holder B and C:
Used for coupling two long gage blocks together with other gage blocks up to 35mm (Holder B) or 140mm (Holder C).
Also used for attaching jaws with two adapters.

	Order No.	R (max.)	L
Holder B	**619032**	90mm	126mm
Holder C	**619033**	200mm	236mm

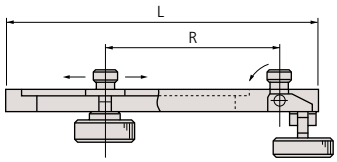

Holder D: **619034**
Used for attaching to the holder base.

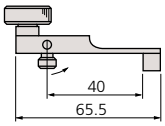

Holder E: **619035**
Used for attaching to the holder base together with other gage blocks up to 125mm. Used for attaching jaws with one adapter.

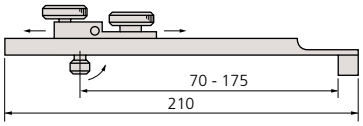

Half-round jaw: **619013**

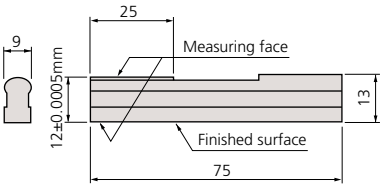

Holder base: **619009**
Adaptor: **619036**

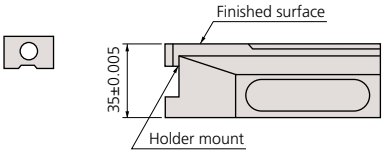

Scriber point: **619019**

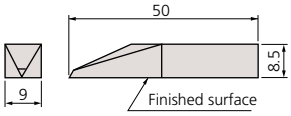

Plain jaw: **619018** (2 pc. set)

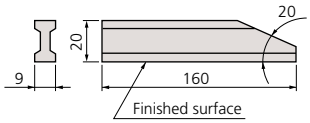

Mitutoyo

Gage Blocks

Rectangular Gage Block Accessories SERIES 516

To expand the variety of rectangular gage block (steel and CERA) applications, Mitutoyo offers the gage block accessories set. By assembling the items in the set, you can easily and quickly build up a precision measuring instrument.

516-601

516-602

E

SPECIFICATIONS

Assortment of Accessories

Order No.	Accessories	Metric Set Order No.		Accessory (s) included in a set
		516-601	516-602	
619002	Holder 60mm		•	1 pc.
619003	Holder 100mm	•	•	1 pc.
619004	Holder 160mm	•	•	1 pc.
619005	Holder 250mm	•	•	1 pc.
619009	Holder Base 35mm	•	•	1 pc.
619010	Half round jaw 2mm	•	•	2 pcs.
619011	Half round jaw 5mm	•	•	2 pcs.
619012	Half round jaw 8mm	•	•	2 pcs.
619013	Half round jaw 12mm	•		2 pcs.
619014	Half round jaw 20mm	•		2 pcs.
619018	Plain jaw (2 pc. set) 160mm	•		1 pc.
619019	Scriber point	•	•	1 pc.
619020	Center point	•	•	1 pc.
619021	Tram point	•		2 pcs.
619022	Triangular straightness edge 100mm	•	•	1 pc.
619023	Triangular straight edge 160mm	•		1 pc.
	Total Qty. in set	22 pcs.	14 pcs.	

Get a Quote

Rectangular Gage Block Accessories

Holder:
Used as a clamp if using plain jaws, scriber point, etc.

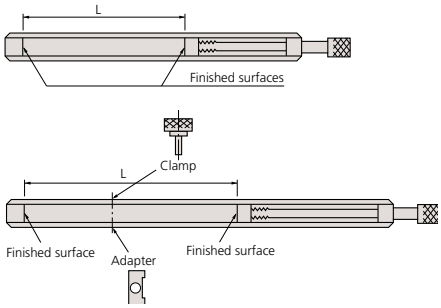

Order No.	L
619002	15 - 61mm
619003	4 - 106mm
619004	62 - 165mm
619005	153 - 256mm

Holder base 35mm: **619009**
Measures a height on the surface plate and scribes a workpiece if used with the holder.

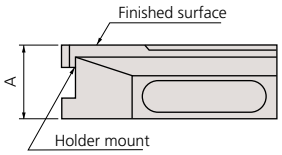

Order No.	A
619009	35±0.005mm

Scriber point: **619019**
Scribes a workpiece if used with the holder and holder base.

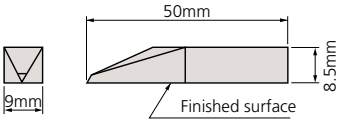

Center point: **619020**
Scribes a workpiece if used with the holder and holder base.

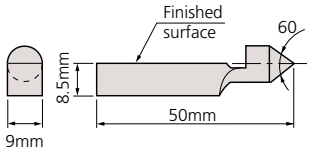

Tram point: **619021**
Inspects the scale of the height gage, etc., if used with the holder and holder base.

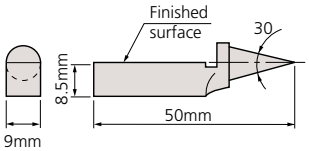

Plain jaw: **619018**
Measures an outside or inside diameter if used with a pair of jaws and the holder.

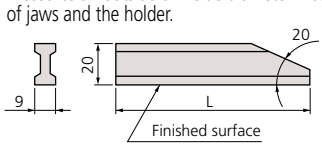

Order No.	L
619018*	160mm

* 2 pc. set

Triangular straight edge: Measures parallelism.

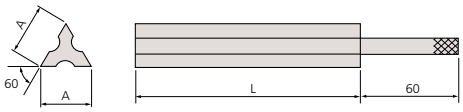

Order No.	L
619022	100mm
619023	160mm

Half-round jaw:
Measures an outside or inside diameter if used with a pair of jaws and the holder.

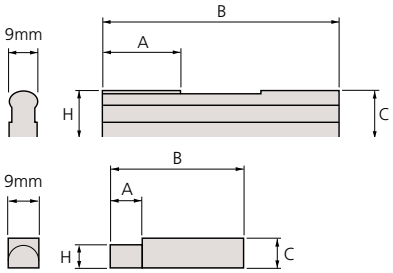

Order No.	H	A	B	C
619010	2±0.0005mm	6mm	40mm	8mm
619011	5±0.0005mm	6mm	50mm	8mm
619012	8±0.0005mm	12mm	60mm	8mm
619013	12±0.0005mm	25mm	75mm	13mm
619014	20±0.0005mm	25mm	125mm	20.5mm

Gage Blocks

Metric Square Gage Block Set
SERIES 516 — Metric Block Set, Long Block Set, Wear Block Set

A square gage block can retain stable orientation both longitudinally and laterally. A wide range of application measurements can be made, including cutting tool positioning, angle measurement with a sine bar, taper measurement with a roller, and inspection of depth micrometers.

Steel 32-block set

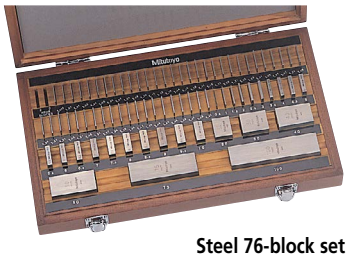

Steel 76-block set

Steel 103-block set

Steel 112-block set

E

SPECIFICATIONS

Metric Block Set

Blocks per set	Order No. Steel	Order No. CERA	Grade	Blocks included in set Size	Step	Qty.
112	516-437-26	—	00	1.0005		1
	516-438-26	—	0	1.001 - 1.009	0.001	9
	516-439-26	—	AS-1	1.01 - 1.49	0.01	49
	516-440-26	—	AS-2	0.5 - 24.5	0.5	49
	—	—	—	25 - 100	25	4
103	516-441-26	—	00	1.005		1
	516-442-26	—	0	1.01 - 1.49	0.01	49
	516-443-26	—	AS-1	0.5 - 24.5	0.5	49
	516-444-26	—	AS-2	25 - 100	25	4
76	516-449-26	—	00	1.005		1
	516-450-26	—	0	1.01 - 1.49	0.01	49
	516-451-26	—	AS-1	0.5 - 9.5	0.5	19
	516-452-26	—	AS-2	10 - 40	10	4
	—	—	—	50 - 100	25	3
47	516-457-26	—	00	1.005		1
	516-458-26	—	0	1.01 - 1.09	0.01	9
	516-459-26	—	AS-1	1.1 - 1.9	0.1	9
	516-460-26	—	AS-2	1 - 24	1	24
		—	—	25 - 100	25	4
32	516-465-26	—	00	1.005		1
	516-466-26	—	0	1.01 - 1.09	0.01	9
	516-467-26	—	AS-1	1.1 - 1.9	0.1	9
	516-468-26	—	AS-2	1 - 9	1	9
	—	—	—	10 - 30	10	3
	—			60		1

Metric Long Block Set

Blocks per set	Order No. Steel	Order No. CERA	Grade	Blocks included in set Size	Step	Qty.
8	516-751-26	—	00	125, 150, 175	25	3
	516-752-26	—	0	200, 250	50	2
	516-753-26	—	AS-1	300, 400, 500	100	3
	516-754-26	—	AS-2			

Metric Wear Block Set

Blocks per set	Order No. Carbide	Order No. CERA	Grade	Blocks included in set Size	Step	Qty.
2	516-820-20	—	0	1	—	2
	516-821-20	—	AS-1			

Provided with Inspection Certificate

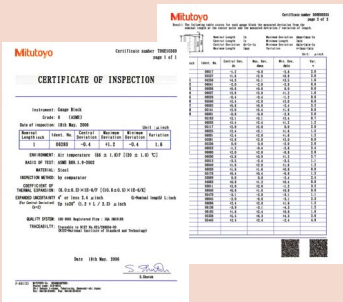

Need Support?

Inch Square Gage Block Set
SERIES 516 — Inch Block Set, Long Block Set, Wear Block Set

SPECIFICATIONS

Inch Block Set

Blocks per set	Order No. Steel	Order No. CERA	Grade	Blocks included in set Size	Step	Qty.
81	516-401-26	516-201-26	00	.1001 - .1009	.0001	9
	516-402-26	516-202-26	0	.101 - .149	.001	49
	516-403-26	516-203-26	AS-1	.05 - .95	.05	19
	516-404-26	516-204-26	AS-2	1 - 4	1	4
36	516-421-26	516-221-26	00	.05″		1
	516-422-26	516-222-26	0	.1001 - .1009	.0001	10
	516-423-26	516-223-26	AS-1	.101 - .109	.001	9
	516-424-26	516-224-26	AS-2	.11 - .19	.01	9
				.1 - .5	.1	5
				1, 2, 4	1	3
28	516-417-26	—	00	.02005″		1
	516-418-26	—	0	.0201 - .0209″	.0001	9
	516-419-26	—	AS-1	.021 - .029″	.001	9
	516-420-26	—	AS-2	.021 - .029″	.01	9
				.10 - .090″		

Inch Long Block Set

Blocks per set	Order No. Steel	Order No. CERA	Grade	Blocks included in set Size	Step	Qty.
8	516-762-26	—	0	5 - 7	1	3
	516-763-26	—	AS-1	8, 10, 12	2	3
				16, 20	4	2

Inch Wear Block Set

Blocks per set	Order No. Carbide	Order No. CERA	Grade	Blocks included in set Size	Step	Qty.
2	516-824-26	516-846-26	0	.05	—	2
	516-825-26	516-847-26	AS-1			
2	516-826-26	516-844-26	0	.1	—	2
	516-827-26	516-845-26	AS-1			

92 pcs. Gage Blocks with accessories set in wooden box.

Blocks in set	Order No. Steel	Grade	Blocks included in set Size	Step	Qty	Individual No.	Description	Qty.
92	516-405-26	0	.0625		1	619052	Plain Jaw .500″	2
			.078125		1	619051	Half round jaw .250″	2
			.09375		1	619055	Holder base .500″	1
			.100025		1	619057	Flat head screw 1 1/4″	2
			.10005		1	619058	Flat head screw 5/8″	2
			.100075		1	619056	Stud	2
			.109375		1	619066	Knurled head screw	2
			.1001 - .1009	.0001	9	619059	Slotted head nut	2
			.101 - .149	.001	49	619062	Tie rod 3″	1
			.05 - .95	.05	19	619063	Tie rod 2 1/4″	1
			.16 - .19	.01	4	619064	Tie rod 1 1/2″	1
			1 4	1	4	619065	3/4″	1

Provided with Inspection Certificate

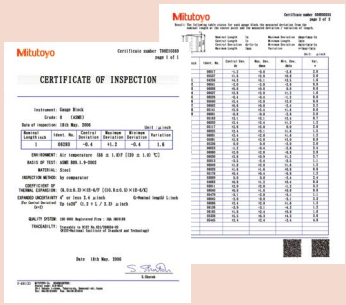

Steel 47-block set

Steel 8-block set

Carbide 2-block set

Carbide 2-block set

E

Gage Blocks

Individual Metric Square Gage Block

SPECIFICATIONS

Metric Block

Length (mm)	Order No.	
	Steel	CERA
0.5	**614506**	—
1	**614611**	—
1.0005	**614520**	—
1.001	**614521**	—
1.002	**614522**	—
1.003	**614523**	—
1.004	**614524**	—
1.005	**614525**	—
1.006	**614526**	—
1.007	**614527**	—
1.008	**614528**	—
1.009	**614529**	—
1.01	**614561**	—
1.02	**614562**	—
1.03	**614563**	—
1.04	**614564**	—
1.05	**614565**	—
1.06	**614566**	—
1.07	**614567**	—
1.08	**614568**	—
1.09	**614569**	—
1.1	**614570**	—
1.11	**614571**	—
1.12	**614572**	—
1.13	**614573**	—
1.14	**614574**	—
1.15	**614575**	—
1.16	**614576**	—
1.17	**614577**	—
1.18	**614578**	—
1.19	**614579**	—
1.2	**614580**	—
1.21	**614581**	—
1.22	**614582**	—
1.23	**614583**	—
1.24	**614584**	—
1.25	**614585**	—
1.26	**614586**	—
1.27	**614587**	—
1.28	**614588**	—
1.29	**614589**	—
1.3	**614590**	—
1.31	**614591**	—
1.32	**614592**	—

Length (mm)	Order No.	
	Steel	CERA
1.33	**614593**	—
1.34	**614594**	—
1.35	**614595**	—
1.36	**614596**	—
1.37	**614597**	—
1.38	**614598**	—
1.39	**614599**	—
1.4	**614600**	—
1.41	**614601**	—
1.42	**614602**	—
1.43	**614603**	—
1.44	**614604**	—
1.45	**614605**	—
1.46	**614606**	—
1.47	**614607**	—
1.48	**614608**	—
1.49	**614609**	—
1.5	**614641**	—
1.6	**614516**	—
1.7	**614517**	—
1.8	**614518**	—
1.9	**614519**	—
2	**614612**	—
2.5	**614642**	—
3	**614613**	—
3.5	**614643**	—
4	**614614**	—
4.5	**614644**	—
5	**614615**	—
5.5	**614645**	—
6	**614616**	—
6.5	**614646**	—
7	**614617**	—
7.5	**614647**	—
8	**614618**	—
8.5	**614648**	—
9	**614619**	—
9.5	**614649**	—
10	**614671**	—
10.5	**614650**	—
11	**614621**	—
11.5	**614651**	—
12	**614622**	—
12.5	**614652**	—

Length (mm)	Order No.	
	Steel	CERA
13	**614623**	—
13.5	**614653**	—
14	**614624**	—
14.5	**614654**	—
15	**614625**	—
15.5	**614655**	—
16	**614626**	—
16.5	**614656**	—
17	**614627**	—
17.5	**614657**	—
18	**614628**	—
18.5	**614658**	—
19	**614629**	—
19.5	**614659**	—
20	**614672**	—
20.5	**614660**	—
21	**614631**	—
21.5	**614661**	—
22	**614632**	—
22.5	**614662**	—
23	**614633**	—
23.5	**614663**	—
24	**614634**	—
24.5	**614664**	—
25	**614635**	—
30	**614673**	—
40	**614674**	—
50	**614675**	—
60	**614676**	—
75	**614801**	—
100	**614681**	—
125	**614802**	—
150	**614803**	—
175	**614804**	—
200	**614682**	—
250	**614805**	—
300	**614683**	—
400	**614684**	—
500	**614685**	—

Metric Wear Block

Length (mm)	Order No. Tungsten carbide
1	**615611**
2	**615612**

PROPRIETARY INSPECTION CERTIFICATE

Suffix Number for Selecting Standard and Certificate Provided

ASME

Grade	Steel
K	—
00	**-521***
0	**-531***
AS-1	**-541***
AS-2	**-551***

* provided with Inspection Certificate

Example: 614611-521
1mm gage block in grade 00.

We make custom length gage blocks:
0.5 - 500mm.

Mitutoyo
CERTIFICATE OF INSPECTION

Inspection Certificate

Need Service?

E

Individual Inch Square Gage Blocks

Suffix Number for Selecting Standard and Certificate Provided

ASME

Grade	Steel, CERA
K	—
00	**-521***
0	**-531***
AS-1	**-541***
AS-2	**-551***

* provided with Inspection Certificate

Example: 614310-521
.01" gage block in grade 00.

We make custom length gage blocks:
.01 - 20"

Mitutoyo
CERTIFICATE OF INSPECTION

Inspection Certificate

SPECIFICATIONS

Inch Block

Length (inch)	Order No. Steel	Order No. CERA
.01	**614310**	—
.02005	**614240**	—
.0201	**614231**	—
.0202	**614232**	—
.0203	**614233**	—
.0204	**614234**	—
.0205	**614235**	—
.0206	**614236**	—
.0207	**614237**	—
.0208	**614238**	—
.0209	**614239**	—
.02	**614320**	—
.021	**614321**	—
.022	**614322**	—
.023	**614323**	—
.024	**614324**	—
.025	**614325**	—
.026	**614326**	—
.027	**614327**	—
.028	**614328**	—
.029	**614329**	—
.03	**614330**	—
.03125 (1/32)	**614301**	—
.04	**614340**	—
.046875 (3/64)	**614302**	—
.05	**614105**	**616105**
.06	**614106**	—
.0625	**614303**	**616303**
.07	**614107**	—
.078125 (5/64)	**614304**	—
.08	**614108**	—
.09	**614109**	—
.09375 (3/32)	**614305**	—
.1	**614191**	**616191**
.100025	**614307**	—
.10005	**614135**	**616135**
.100075	**614308**	—
.1001	**614121**	**616121**
.1002	**614122**	**616122**
.1003	**614123**	**616123**
.1004	**614124**	**616124**
.1005	**614125**	**616125**
.1006	**614126**	**616126**
.1007	**614127**	**616127**
.1008	**614128**	**616128**
.1009	**614129**	**616129**
.101	**614141**	**616141**
.102	**614142**	**616142**
.103	**614143**	**616143**
.104	**614144**	**616144**
.105	**614145**	**616145**

Length (inch)	Order No. Steel	Order No. CERA
.106	**614146**	**616146**
.107	**614147**	**616147**
.108	**614148**	**616148**
.109	**614149**	**616149**
.109375 (7/64)	**614306**	—
.11	**614150**	**616150**
.111	**614151**	**616151**
.112	**614152**	**616152**
.113	**614153**	**616153**
.114	**614154**	**616154**
.115	**614155**	**616155**
.116	**614156**	**616156**
.117	**614157**	**616157**
.118	**614158**	**616158**
.119	**614159**	**616159**
.12	**614160**	**616160**
.121	**614161**	**616161**
.122	**614162**	**616162**
.123	**614163**	**616163**
.124	**614164**	**616164**
.125	**614165**	**616165**
.126	**614166**	**616166**
.127	**614167**	**616167**
.128	**614168**	**616168**
.129	**614169**	**616169**
.13	**614170**	**616170**
.131	**614171**	**616171**
.132	**614172**	**616172**
.133	**614173**	**616173**
.134	**614174**	**616174**
.135	**614175**	**616175**
.136	**614176**	**616176**
.137	**614177**	**616177**
.138	**614178**	**616178**
.139	**614179**	**616179**
.14	**614180**	**616180**
.141	**614181**	**616181**
.142	**614182**	**616182**
.143	**614183**	**616183**
.144	**614184**	**616184**
.145	**614185**	**616185**
.146	**614186**	**616186**
.147	**614187**	**616187**
.148	**614188**	**616188**
.149	**614189**	**616189**
.15	**614115**	**616115**
.16	**614116**	**616116**
.17	**614117**	**616117**
.18	**614118**	**616118**
.19	**614119**	**616119**
.2	**614192**	**616192**

Length (inch)	Order No. Steel	Order No. CERA
.25	**614212**	**616212**
.3	**614193**	**616193**
.35	**614213**	**616213**
.375 (3/8)	**614309**	—
.4	**614194**	**616194**
.45	**614214**	**616214**
.5	**614195**	**616195**
.55	**614215**	**616215**
.6	**614196**	**616196**
.65	**614216**	**616216**
.7	**614197**	**616197**
.75	**614217**	**616217**
.8	**614198**	**616198**
.85	**614218**	**616218**
.9	**614199**	**616199**
.95	**614219**	**616219**
1	**614201**	**616201**
2	**614202**	**616202**
3	**614203**	**616203**
4	**614204**	**616204**
5	**614205**	—
6	**614206**	—
7	**614207**	—
8	**614208**	—
10	**614222**	—
12	**614223**	—
16	**614224**	—
20	**614225**	—

Inch Wear Block

Length (inch)	Order No. Tungsten carbide
.05	**615105**
.1	**615191**

DIMENSIONS

Unit: mm

Nominal length: 0.5mm - 4.5mm
(.010" - .19")

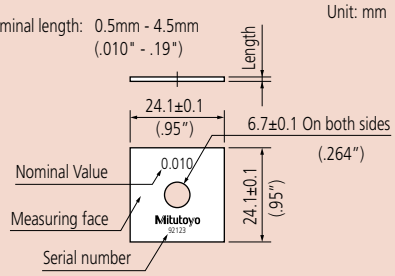

Nominal length: 5mm - 14.5mm
(.02" - .450")

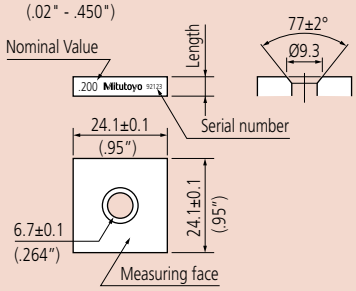

Nominal length: 15mm - 500mm
(.500" - 20")

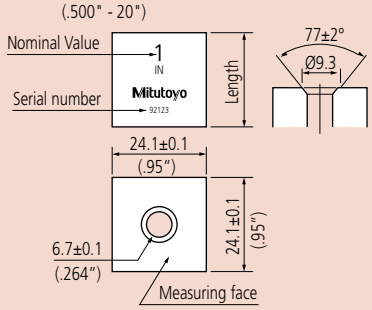

Gage Blocks

Square Gage Block Accessories
SERIES 516

To expand the variety of square gage block applications, Mitutoyo offers the gage block accessories set. By assembling the items in the set, you can easily and quickly build up a precision measuring instrument.

516-611

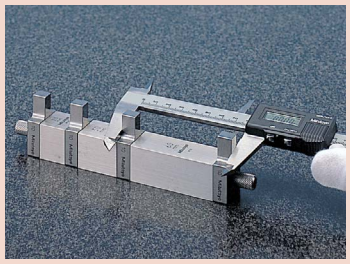

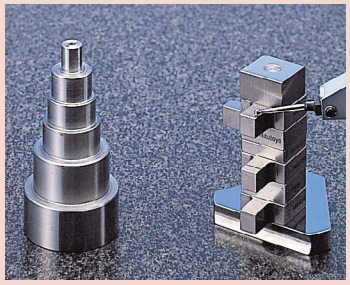

SPECIFICATIONS

Inch

Order No. 516-612	Included in set
2 pcs.	Half round jaw .125" (**619050**)
2 pcs.	Half round jaw .25" (**619051**)
2 pcs.	Plain jaw (**619052**)
1 pc.	Center point (**619053**)
1 pc.	Scriber point (**619054**)
1 pc.	Block base (**619055**)
2 pcs.	Flat head screw 1·1/4" (**619057**)
2 pcs.	Flat head screw 5/8" (**619058**)
2 pcs.	Slotted head nut (**619059**)
2 pcs.	Adjustable tie rod 6" (**619060**)
2 pcs.	Adjustable tie rod 4·1/2" (**619061**)
1 pc.	Tie rod 3" (**619062**)
1 pc.	Tie rod 2·1/4" (**619063**)
1 pc.	Tie rod 1·1/2" (**619064**)
1 pc.	Tie rod 3/4" (**619065**)
2 pcs.	Stud (**619056**)
2 pcs.	Knurled head screw (**619066**)

Metric

Order No. 516-611	Included in set
2 pcs.	Half round jaw 2mm (**619070**)
2 pcs.	Half round jaw 5mm (**619071**)
2 pcs.	Plain jaw (**619072**)
1 pc.	Center point (**619073**)
1 pc.	Scriber point (**619054**)
1 pc.	Block base (**619074**)
2 pcs.	Flat head screw 1·1/4" (**619057**)
2 pcs.	Flat head screw 5/8" (**619058**)
2 pcs.	Slotted head nut (**619059**)
2 pcs.	Adjustable tie rod 6" (**619060**)
2 pcs.	Adjustable tie rod 4·1/2" (**619061**)
1 pc.	Tie rod 3" (**619062**)
1 pc.	Tie rod 2·1/4" (**619063**)
1 pc.	Tie rod 1·1/2" (**619064**)
1 pc.	Tie rod 3/4" (**619065**)
2 pcs.	Stud (**619056**)
2 pcs.	Knurled head screw (**619066**)

Need Calibration?

Half round jaw:
Used to measure an inside or outside diameter.

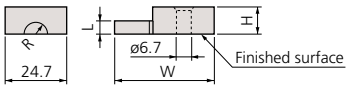

Order No.	R	L	W	H
619070	1.95mm	2mm	33.6mm	5.3mm
619071	4.95mm	5mm	39.9mm	10.3mm
619050	.123″	.125″	33.6mm	5.3mm
619051	.248″	.25″	39.9mm	10.3mm

Plain jaw: **619072** (10mm), **619052** (.5")
Used to measure an inside or outside diameter.

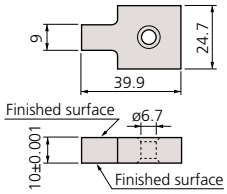

Center point: **619073** (2mm), **619053** (.1")
Used to scribe a workpiece.

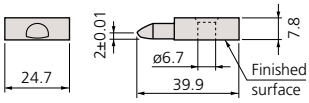

Scriber point: **619054**
Used to scribe a workpiece.

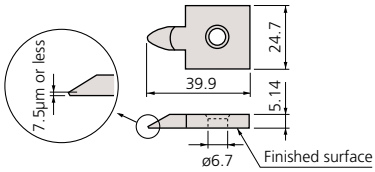

Base: **619074** (10mm), **619055** (.5")
Used as clamps by inserting them into the center hole of a square gage block.

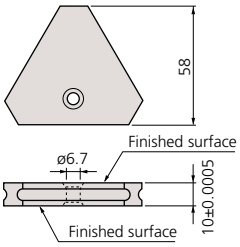

- Flatness 1.5 μm
- Parallelism 1.5 μm
  (The surface within 1.5mm of edge is excluded)

Stud: **619056**

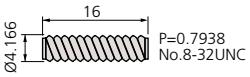

Flat head screw

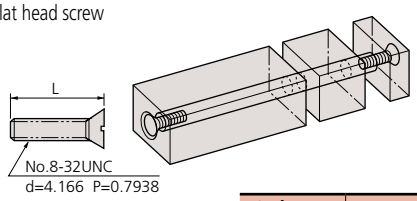

Order No.	L
619057	31.6mm
619058	15.8mm

Slotted head nut: **619059**

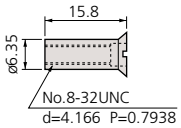

Knurled head screw: **619066**

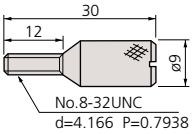

Tie rod

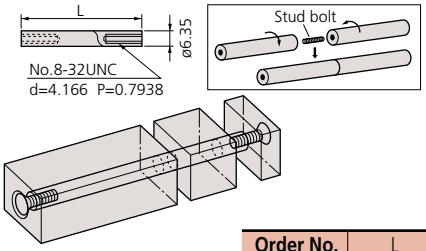

Order No.	L
619065	19mm
619064	38mm
619063	57mm
619062	76mm

Adjustable tie rod

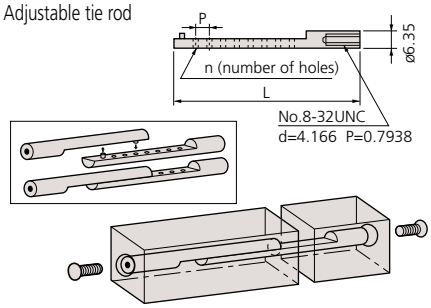

Order No.	L	P	n
619060	124.5mm	6.35mm	14
619061	86.5mm	6.35mm	8

Mitutoyo

Gage Blocks

Ceraston
Accessory for Gage Blocks

- Alumina-ceramic grinding stone for removing burrs from hard materials such as ceramics that ordinary grinding stones cannot handle.
- Can be used both for steel gage blocks and CERA Blocks.

601644 601645

SPECIFICATIONS

Order No.	Dimensions (W x D x H)	Mass
601645	100 x 25 x 12mm	110g
601644	150 x 50 x 20mm	530g

E

Maintenance Kit for Gage Blocks
SERIES 516

- Includes all necessary maintenance tools for daily care and storage of gage blocks.
- Supplied in a fitted wooden case for portable use.

516-650E

SPECIFICATIONS

Order No.	Assortment of tools and accessories
516-650E	Ceraston (**601645**): Used for removing burrs on the measuring surface.
	Optical flat (**158-117**): Used for checking whether burrs exist.
	Tweezers (**600004**): Used for handling thin gage blocks.
	Blower brush (**600005**): Used for blowing out dust on the measuring surface.
	Cleaning paper (**600006**): Used for wiping off rust preventive oil and contamination.
	Artificial leather mat (**600007**): Used as a gage block mat.
	Reagent bottle (**600008**): Bottle of wiping solution (100mL)
	Gloves

Removing Burrs

(1) Wipe any dust and oil films from the gage block and the Ceraston (or Arkansas stone) using a solvent.
(2) Place the gage block on the Ceraston so that the measuring face that has burrs is on the abrasive surface of the stone. While applying light pressure, move the gage block to and fro about ten times (Fig. 1). Use a block rubber for thin gage blocks to apply even pressure (Fig. 2).
(3) Check the measuring face for burrs with an optical flat. If the burrs have not been removed, repeat step (2). If burrs are too large, they may not be removed with a grinding stone. If so, discard the gage block.

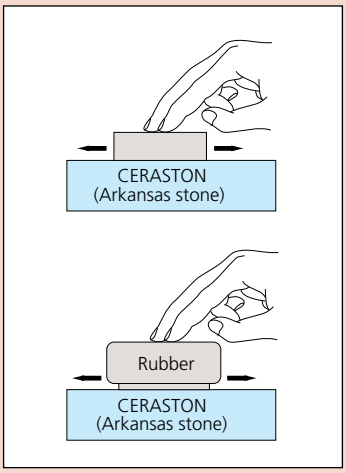

Note: The abrasive surface of a Ceraston must be made flat by lapping it from time to time. After lapping the Ceraston, the lapping powder must be completely removed from the surface to prevent the surface of the gage block from being scratched.
Mitutoyo does not carry the Arkansas stone.

DIMENSION

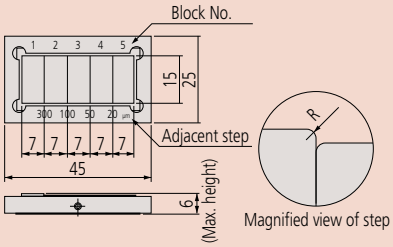

Step Master SERIES 516

Step master is a master gage used for the z-axis (vertical direction) calibration of optical instruments.

- Each adjacent step is measured down to 0.01µm by using a interferometer within ±0.20µm allowance.
- Steel and ceramic types are available.

516-498
Ceramic type

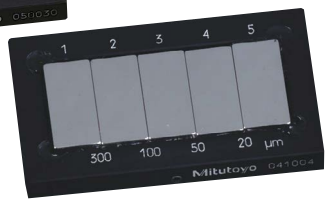

516-199
Steel type

SPECIFICATIONS

Metric

Order No.	Step value between adjacent blocks				Remarks
	No. 1 - No. 2	No. 2 - No. 3	No. 3 - No. 4	No. 4 - No. 5	
516-198	10µm	5µm	2µm	1µm	Steel type
516-199	300µm	100µm	50µm	20µm	Steel type
516-498	10µm	5µm	2µm	1µm	Ceramic type
516-499	300µm	100µm	50µm	20µm	Ceramic type

Made-to-order Block & Reference

- Mitutoyo can provide gage blocks and reference gages to your specific size and design.

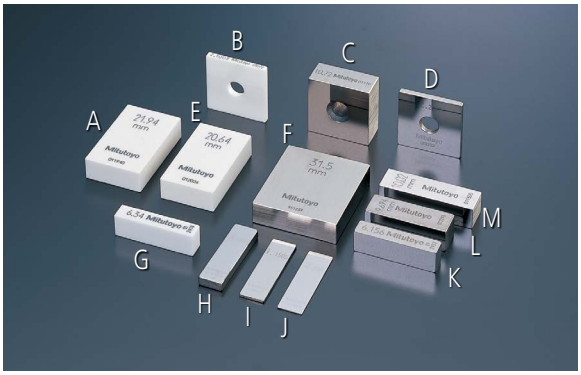

A: Ceramic rectangular gage block (21.94mm)
B: Ceramic square gage block (2.1005mm)
C: Steel square gage block (10.72mm)
D: Steel square gage block (2.2065mm)
E: Ceramic rectangular gage block (20.64mm)
F: Steel rectangular gage block (31.5mm)
G: Ceramic rectangular gage block (6.34mm)
H: Steel rectangular gage block (3.603mm)
I: Steel rectangular gage block (1.1505mm)
J: Steel rectangular gage block (0.555mm)
K: Steel rectangular gage block (6.156mm)
L: Steel rectangular gage block (9.694mm)
M: Steel rectangular gage block (10.02mm)

Special reference gages and step master (T: nominal size)

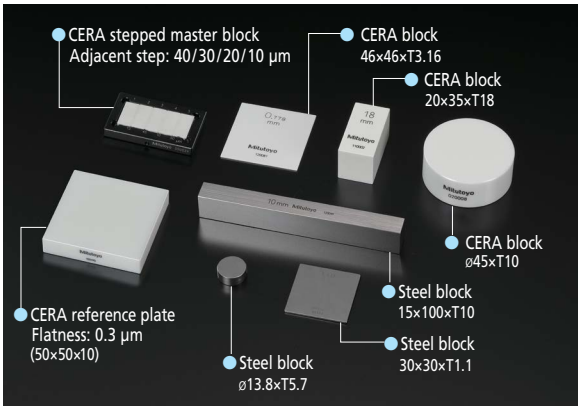

Unit: mm

Available Dimension

Nominal size: .004 to 20" / 0.1 to 1000mm (steel)
.1 to 20" / 0.5 to 500mm (ceramic)
Nominal pitch: 0.0005mm (up to 100mm)
0.001mm (over 100mm)
Minimum section dimension:
Approx. .24 x .24" / 6 x 6mm
Maximum section dimension:
Approx. 5.5 x 5.5" / 140 x 140mm (steel)
Approx. 6.3" Dia. / ø160mm
(steel, cylindrical)
Approx. 3.94 x 1.97" / 100 x 50mm
(ceramic)
Approx. .24" Dia. / ø60mm
(ceramic, cylindrical)
Accuracy: Gage Block Grade level

Special materials of low expansion glass and low expansion ceramic are available.

Find a Distributor

E

Gage Block Calibration

Gage Block Comparator GBCD-250
SERIES 565 — Manual Comparator with Dual Gage Heads

- Easily compare Gage blocks between 0.1mm and 250mm to master gage block sets.
- Rectangular gage block holder kit included.
- Provided standard: Main Unit & Display Unit with User's Manual, Certificate of Inspection, A2LA accredited Field Service Installation and NIST-traceable Certificate of Calibration.
- This system employs two LGH, high accuracy, super-wide-range gage heads (range = ±3mm).
- Wide-Range function allows an entire Gage Block set to be calibrated with as few as 7 Master Gage Blocks.
- Dual head design allows accurate measurement, even when gage blocks have a slight curvature.

SPECIFICATIONS

Inch / Metric

Model No.	GBCD-250
Order No.	**565-151A**
Range	0.1mm - 250mm / .004 - 10"
Resolution	0.000001mm(0.01µm)/.0000001in(.1µin)
Comparison accuracy in narrow range (20°C)	±(0.03+0.3L/1000)µm* L = Gage block length (mm)
Wide Range Accuracy (within +/-3mm range)	±(0.06+0.3L/1000)µm
Measuring units	Laser Hologage (upper and lower)
Operating condition	Temperature: 20°C ±1°C Humidity: 30% RH to 60% RH
Data output	Via SPC output port
Dimensions (W x D x H)	Main unit: 455 x 318 x 691mm Display unit: 345 x 397 x 187mm
Mass	Main unit: Approx. 52kg Display unit: Approx. 9kg

* 95% confidence interval (not including the calibration error of the standard gage block).

Standard Accessories

Main Unit – Long Range
Display Unit – EH-S counter with output
User's Manual

Optional Accessories

611615-521: 5mm, grade 00 gage block (required)
962723: Gage head calibration kit
02ASD130: Square gage block holder kit
02ASF040: Heat protection shield
02ASQ953: GBPAK-M tracking software
Supporting OS: Windows Vista, 7, 10, 11
937179T: Foot Switch
936937: Connecting cable
PMICPU004: Dell CPU, 64 BIT, WIN11
PMIMON003: Monitor, Dell 22" widescreen

Gage Block Comparator GBCD-100A
SERIES 565 — Automatic-Type Comparator with Dual Gage Heads

The GBCD-100A Automatic Gage Block Comparator is an easy-to-operate dual-head gage block inspecting system. It automatically compares workpieces with a standard gage block and determines accuracies such as central length, maximum length, minimum length and parallelism through the operation of an optional personal computer.

SPECIFICATIONS

Model No.	GBCD-100A
Order No.	**565-172**
Resolution	0.00001mm (0.01µm) / .000001"
Range	0.5mm - 100mm / .02 - 4"
Measuring unit	Differential (dual-head) type Mu-Checker
Accuracy in narrow range (20°C)	±(0.03+0.3L/1000)µm* L = Gage block length (mm)
Measuring force	Upper gage head: 1N (100gf) Lower gage head: 0.6N (60gf)
Air requirement	400kPa (4kgf/cm^2)
Operating condition	Temperature: 20°C ±1°C Humidity: 58%RH ±15%RH
Dimensions (W x D x H)	Main unit: 710 x 366 x 783mm Electronic unit: 160 x 410 x 382mm
Mass	Main unit: 120kg Electronic unit: 14kg

* 95% confidence interval (not including the calibration error of the standard gage block).

Standard Accessories

Main Unit, Controller, User's Manual

Optional Accessories

02ASW551: GBPAK-A software (required)
516-146-E1: Gage block set for GBCD calibration
PMICPU004: Dell CPU, 64 BIT, WIN11
PMIMON003: Monitor, Dell 22" widescreen

Height Master
SERIES 515

For calibrating and setting height gages.

- Models with staggered arrangement of block stack have two measuring faces on the same level, one facing up and the other down (except for **515-310**).
- Each height master is supplied with a gage block for zero-setting.
- Supplied in fitted wooden case.

515-322

515-310

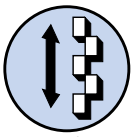

Staggered 20mm blocks (movable)

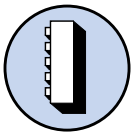

Vertical orientation

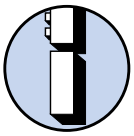

Riser block

Technical Data

Graduation:	.00001" or 0.001mm
Counter Resolution:	.001" or 0.01mm
Character Height:	.16" / 4mm
Micrometer Head	
Travel stroke:	1" or 20mm
Pitch:	.025"/rev or 0.5mm/rev
Hysteresis:	.00004" or 1µm

Standard Accessories

Reference Block: **611621-531** (11mm: Metric Models)
Reference Block: **611193-531** (0.3": Inch Models)

Optional Accessories

515-112: Auxiliary block kit for bore gage (mm)
515-119: Auxiliary block kit for bore gage (for **515-310**)
515-121: Auxiliary block kit for bore gage (for **515-311**)
———: Riser block (See page E-29)

Reading

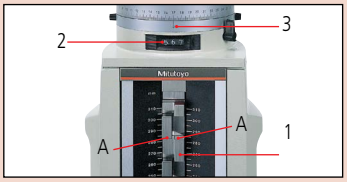

Height A

1. Scale	280.	mm
2. Counter	5.67	mm
3. Thimble	0.000	mm
	285.670	mm

Typical Application

Got Questions?

SPECIFICATIONS

Inch

Range (H)	Order No.	Block step	Graduation	Block Pitch Accuracy	Parallelism of Block	Micrometer Head Accuracy	Mass (kg)
.2" < H ≤ 12.2"	**515-310**	.5" (straight)	.00001"	±.00005"	.00004"	±.00005"	23
.2" < H ≤ 12.2"	**515-311**	1" (staggered)					

Metric

Range (H)	Order No.	Block step	Graduation	Block Pitch Accuracy	Parallelism of Block	Micrometer Head Accuracy	Mass (kg)
5 < H ≤ 310mm	**515-322**	20mm (staggered)	0.001mm	±1.5µm	1µm	±1µm	23

Reference Gages

Digital Height Master SERIES 515

For calibrating and setting height gages.

- Standard model with a digital display, featuring all essential specifications required for versatile height standard.
- With SPC output.
- Each height master is supplied with a gage block for zero setting.

515-374

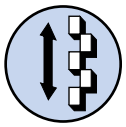

Staggered 20mm blocks (movable)

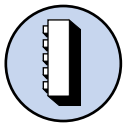

Vertical orientation

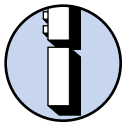

Riser block

SPECIFICATIONS

Inch / Metric

Range (H)	Order No.	Block step	Resolution	Block Pitch Accuracy	Parallelism	Micrometer Head Accuracy	Mass (kg)
.5" < H ≤ 12"	**515-375**	1" (staggered)	.0001" / 0.001mm	±.0001"	.00005"	±.0001"	9.5
.5" < H ≤ 18"	**515-377**				.0001"		13.6
.5" < H ≤ 24"	**515-379**						16.0

Metric

Range (H)	Order No.	Block step	Resolution	Block Pitch Accuracy	Parallelism	Micrometer Head Accuracy	Mass (kg)
10 < H ≤ 310mm	**515-374**	20mm (staggered)	0.001mm	±1.5μm	2μm	±2μm	9.5
10 < H ≤ 460mm	**515-376**			±2.5μm	2.5μm		13.6
10 < H ≤ 610mm	**515-378**			±3.5μm	2.5μm	±2.5μm	16.0

Technical Data

Resolution (LCD):	.0001" or 0.001mm
Graduation:	.0001" or 0.002mm
Character Height	.21" / 5.4mm
Micrometer Head	
Travel Stroke:	1" or 20mm
Pitch:	.025"/rev or 0.5mm/rev
Hystersis:	.0001" for all inch models 0.002mm for 300mm models 0.0025mm for 450 & 600mm models
Battery:	SR44 (2 pcs.), **938882**
Battery life:	Approx. 1.8 years under normal use

Function

Zero-setting, Presetting, ABS/INC switching, Data hold, Data output, inch/mm conversion (on inch/metric models only)
Alarm: Low voltage, Counting value composition error

Standard Accessories

Reference Block: **611621-531** (11mm: Metric Models)
Reference Block: **611196-531** (0.6": Inch Models)

Optional Accessories

515-111:	Auxiliary block kit for bore gage (mm)
515-120:	Auxiliary block kit for bore gage (inch)
———:	Riser block (see page E-29)
959149:	SPC cable (40" / 1m)
959150:	SPC cable (80" / 2m)
050019:	Fitted mahogany case for 12" / 300mm model
050059:	Fitted mohogany case for 18" / 450mm model 24" / 600mm model

Talk to Sales

Universal Height Master
SERIES 515 — Use in Vertical and Horizontal Orientation

- The Universal Height Master is designed for both vertical and horizontal orientations, providing a wide range of applications, such as accuracy checking of machine tool table movements.
- Fitted wooden case supplied.

Technical Data

Graduation: 0.001mm or .00001"
Counter Resolution: .001" or 0.01mm
Character Height: .16" / 4mm
Block arrangement: Straight arrangement

Micrometer Head
Travel stroke: 1" or 20mm
Pitch: .025"/rev or 0.5mm/rev
Hysteresis: .00004" / 1.2µm up to 24.2" / 610mm
.00006" / 1.5µm for 40.2" / 1010mm
Block pitch accuracy: ±1.5µm (0 < R ≤ 310mm)
±2.5µm (310 < R ≤ 610mm)
±3.5µm (610 < R ≤ 1010mm)
Parallelism of blocks: 1.0µm (0 < R ≤ 310mm)
2.5µm (310 < R ≤ 1010mm)

Optional Accessories

900574*: Supporting base for vertical operation (*supplied as a standard for **515-523** and **515-513**)
515-112: Auxiliary block kit for bore gage (mm)
515-119: Auxiliary block kit for bore gage (inch)

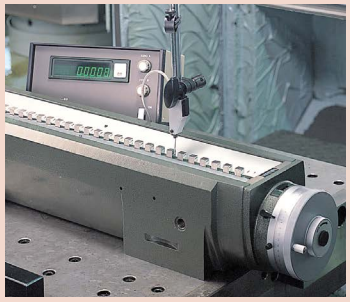
Using in horizontal orientation

Supporting base **900574**

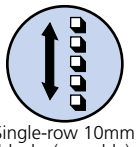
Single-row 10mm blocks (movable)

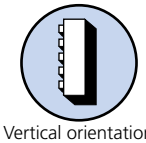
Vertical orientation

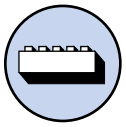
Horizontal orientation

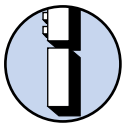
Riser block

515-520

SPECIFICATIONS

Inch

Range (R)	Order No.	Block step	Graduation	Block Pitch Accuracy	Parallelism of Block	Micrometer Head Accuracy	Mass (kg)
.2" < R ≤ 18.2"	**515-512**	.5" (straight)	.00001"	±.00005"	.00006"	±.00004"	42
.2" < R ≤ 24.2"	**515-510**			±.0001"			50
.2" < R ≤ 40.2"	**515-513**			±.00015"	.00008"	±.00006"	63.5

Metric

Range (R)	Order No.	Block step	Graduation	Block Pitch Accuracy	Parallelism of Block	Micrometer Head Accuracy	Mass (kg)
5 < R ≤ 610mm	**515-520**	10mm (straight)	0.001mm	±1.5µm	1.0µm	±1.2µm	42
5 < R ≤ 1010mm	**515-523**			±3.5µm	2.5µm	±1.5µm	63.5

Reference Gages

Riser Blocks
SERIES 515

- These riser blocks are specially designed for the 515 Series Height Masters.

515-113 515-114 515-115

E

SPECIFICATIONS

Inch

Height	Order No.	Accuracy of height	Mass (kg)
6″	**515-116**	±20µin	5.7
12″	**515-117**	±40µin	11.3
24″	**515-118**	±80µin	31

Metric

Height	Order No.	Accuracy of height	Mass (kg)
150mm	**515-113**	±0.6µm	5.7
300mm	**515-114**	±1.0µm	11.3
600mm	**515-115**	±2.0µm	31

Auxiliary Block Kit
SERIES 515 — for Bore Gage

- Used for efficient zero-setting of dial bore gages and tubular inside micrometers (18 - 150mm) on a Height Master.

515-112

SPECIFICATIONS

Inch

Order No.	Applicable Height Master
515-119	Universal Height Master, Height Master (**515-310**)
515-120	Digimatic Height Master
515-121	Height Master (**515-311**)

Metric

Order No.	Applicable Height Master
515-110	Universal Height Master
515-111	Digimatic Height Master
515-112	Height Master

Bore gage zero-setting

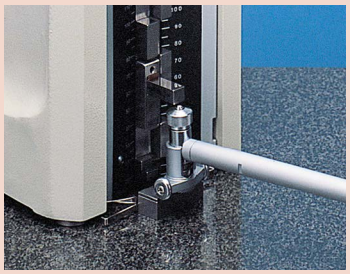

High-Accuracy Check Master HMC-H SERIES 515

- Designed to check the accuracy of table movements of machine tools and calibrate CMMs. Permanently wrung stack of gage blocks is housed in a rigid frame.
- Can be used in either vertical or horizontal orientation.

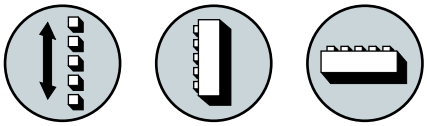

Single-row 10 mm (0.5 in) blocks | Vertical orientation | Horizontal orientation

SPECIFICATIONS

Inch

Order No.		515-710	515-711	515-712	515-713
Range (H)		12.5 in	18.5 in	24.5 in	40.5 in
Block step		0.5 in			
Block pitch accuracy	H ≤ 12.5 in	±100 µin			
	12.5 in < H ≤ 24.5 in	—	±150 µin		
	24.5 in < H ≤ 40.5 in	—	—	—	±200 µin
Parallelism of blocks	H ≤ 12.5 in	50 µin			
	12.5 in < H ≤ 24.5 in	—	60 µin		
	24.5 in < H ≤ 40.5 in	—	—	—	80 µin
Mass		7 kg	10 kg	13 kg	22 kg

Metric

Order No.		515-720	515-721	515-722	515-723	515-724
Range (H)		310 mm	450 mm	610 mm	1010 mm	1510 mm
Block step		10 mm				
Block pitch accuracy	H ≤ 310 mm	±2.5 µm				
	310 < H ≤ 610 mm	—	±3.5 µm			
	610 < H ≤ 1010 mm	—	—	—	±5.0 µm	
	1010 < H ≤ 1510 mm	—	—	—	—	±8.0 µm
Parallelism of blocks	H ≤ 310 mm	1.2 µm				
	310 < H ≤ 610 mm	—	1.5 µm			
	610 < H ≤ 1010 mm	—	—	—	2.0 µm	
	1010 < H ≤ 1510 mm	—	—	—	—	2.5 µm
Mass		7 kg	10 kg	13 kg	22 kg	30 kg

Note 1: The block pitch accuracy and the parallelism of blocks are relative to the main unit reference surface.
Note 2: Supplied with a wooden storage case as standard.
Note 3: High-accuracy type is available by special order.

Need Repair?

Squares, Edge & Center Finders

Square Master
SERIES 311 — Squareness / Straightness Measuring Instrument

- Squareness (perpendicularity) and straightness measurements can be performed accurately and efficiently by moving a lever.
- With a dial test indicator for reading displacements.
- Its own squareness is adjustable for high-accuracy measurement.

311-215

311-225

311-245

E

SPECIFICATIONS

Metric

Vertical travel	Order No.	Squareness	Straightness	Mass (kg)
150mm	**311-215**	3µm	2µm	13.7
250mm	**311-225**	6µm	2.5µm	16.2
450mm	**311-245**	9µm	3.5µm	24

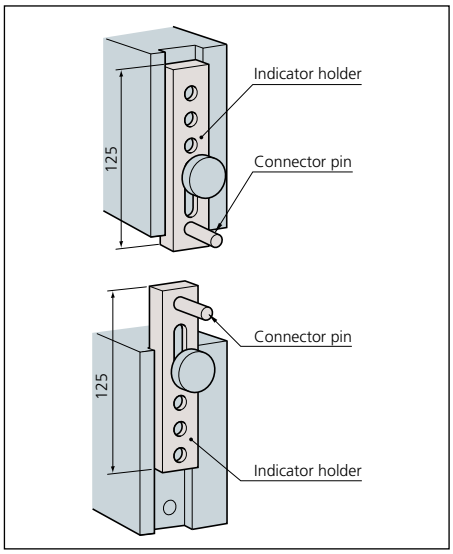

Technical Data

Dial test indicator provided **513-401-10H**

Range:	0.2mm
Graduation:	0.002mm
Accuracy:	3µm

Optional Accessory

———:	Riser blocks (see page E-29)*
900571:	Adjustable holder
900551:	Extension holder
900565:	Feeler**

*Not compatible with for 450mm model.
Adapter (902803**) is required.

Adjustable Holder

No.900571

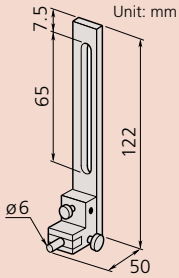

Extension Holder

No.900551

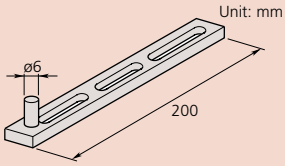

Feeler

No.900565

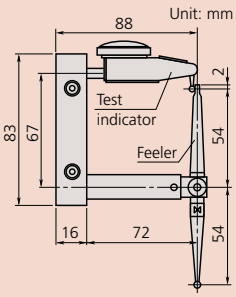

Where to Buy

Standard Scales
SERIES 182 — Made of Low-Expansion Glass

- High-precision glass scales manufactured under the Mitutoyo leading-edge Linear Scale production technology.
- High accuracy is guaranteed to be used as a standard for calibrating graduated scales.

Technical Data

Accuracy (at 20°C):	(0.5+L/1000)µm, L = Measured length (mm)
Glass material:	Low expansion glass
Thermal expansion Coefficient:	$8x10^{-8}$/K
Graduation:	1mm
Graduation thickness:	4µm
Mass:	0.75kg (250mm), 1.8kg (500mm)

SPECIFICATIONS

Metric

Range	Order No.	L	W	T
250mm	**182-501-50**	280mm	20mm	10mm
	182-501-60*			
500mm	**182-502-50**	530mm	30mm	20mm
	182-502-60*			

*with English JCSS certificate.

DIMENSIONS

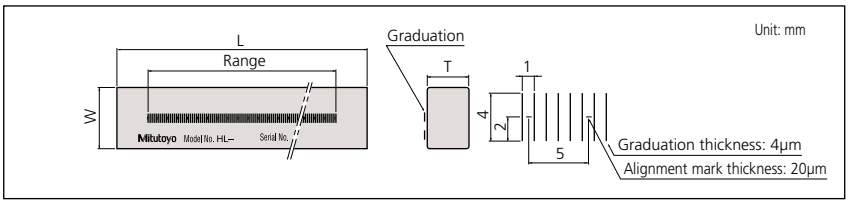

Working Standard Scales
SERIES 182

- High-precision glass scales manufactured with Mitutoyo leading-edge linear scale production technology.
- Ideal for checking magnification accuracy of profile projectors and microscopes, and the table feeding accuracy of measuring equipment.

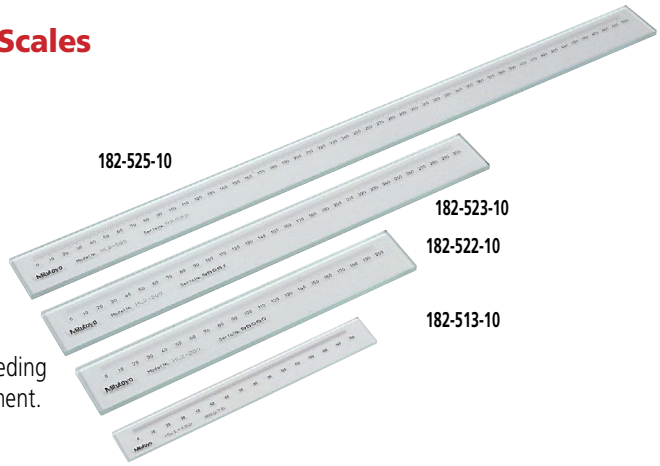

Technical Data

Accuracy (at 20°C):	(1.5+2L/1000)µm, L = Measured length (mm)
Glass material:	Sodium glass
Thermal expansion Coefficient:	$8.5x10^{-6}$/K
Graduation:	0.1mm (thickness: 20µm) 0.5mm (thickness: 50µm) 1mm (thickness: 100µm)

SPECIFICATIONS

Metric

Range	Order No.	Graduation	L	Mass
50mm	**182-511-10**	0.1mm	75mm	0.23kg
100mm	**182-512-10**		125mm	0.24kg
150mm	**182-513-10**		175mm	0.35kg
200mm	**182-514-10**		225mm	0.36kg
100mm	**182-521-10**	0.5mm	130mm	0.27kg
200mm	**182-522-10**		230mm	0.32kg
300mm	**182-523-10**		330mm	0.57kg
400mm	**182-524-10**		430mm	0.71kg
500mm	**182-525-10**		530mm	0.86kg
250mm	**182-531-10**	1mm	280mm	0.55kg
500mm	**182-532-10**		530mm	0.86kg
750mm	**182-533-10**		780mm	1.22kg
1000mm	**182-534-10**		1030mm	1.54kg

DIMENSIONS

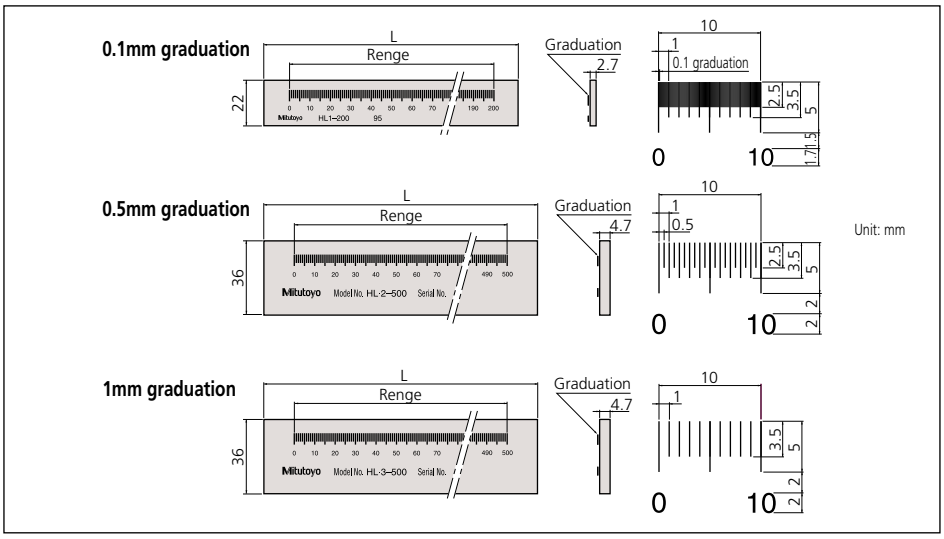

Reference Gages

High-Precision Square Series 311

The High-Precision Square gage is used for inspecting the travel straightness and axial perpendicularity of moving elements on equipment, such as machine tools, CMMs, form measuring machines and semiconductor-related equipment.

- Four precision-lapped reference surfaces.
- Better than 1µm/300mm straightness and perpendicularity.

311-111

311-112

311-113

E

SPECIFICATIONS

Metric

Order No.	Dimension (W x L x T)	Mass
311-111	90 x 110 x 25mm	1.5kg
311-112	160 x 210 x 25mm	5.0kg
311-113*	260 x 310 x 30mm	14.0kg

***311-113** is supplied with a removable handle.

Edge & Center Finders

- The Edge and Center Finders are hardened and ground on all surfaces.

SPECIFICATIONS

Order No.	Shank (DIA)	Tip (DIA)	Remarks
050103	3/8″ (.375″)	.20″	Center Type
050104	1/2″ (.50″)		
050101	3/8″ (.375″)		Edge Type
050102	1/2″ (.50″)		
050105	.375″/10mm	10mm	
050106	10mm		
050109	1/2″ (.50″)	.50″	
050110	1/2″ (.50″)	.20″, .50″	Double Edge Finder

050101

050102

050103

050104

050105

050106

Get a Quote

Digital Hand Tachometers SERIES 982

- New digital hand tachometers are compact and easy to handle.
- NIST certification is supplied with each digital hand tachometer.
- Model PH-200LC (982-552) has laser diode detection and a combination of contact and non-contact measurement.
- Supplied with plastic carrying case.

982-551

982-552

DIMENSIONS

982-551

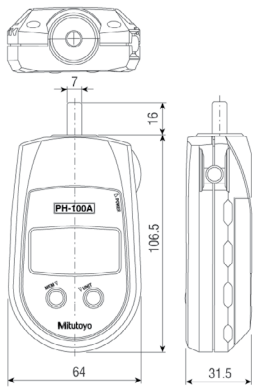

982-552

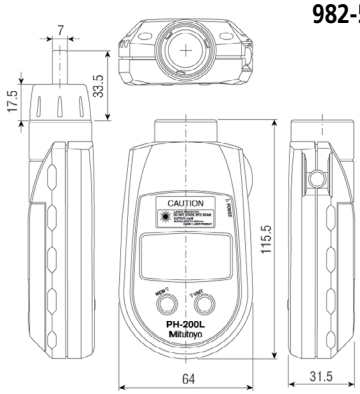

SPECIFICATIONS

Order No.	982-551	982-552
Model No.	PH-100A	PH-200LC
Revolution per minute	1.0 – 25,000 rpm	—
Rotation speed	—	Non-contact: 6.0 – 99,999 rpm; Contact: 6.0 – 25,000 rpm
Measuring accuracy Revolution Surface, Speed, Length	1.0 – 599.9rpm: ±1rpm, 600.0 – 25,000 rpm: ±0.006% and ±0.5 digit ±0.4% and 1 digit	6.0 – 599.9 rpm: ±1rpm, 600.0 – 99,999 rpm ±0.006% and ±0.5 digit ±0.4% and ±1 digit
Detection	Optical coupler, 20 pulses per revolution	Laser diode
Outside dimensions	4.83″ L x 2.52″ W x 1.24″ H (122.5mm x 64mm x 31.5mm)	4.55″ L x 2.52″ W x 1.24″ H Overall length with contact adapter: 149mm
Mass	170 g	160 g
Power	Battery: AA 3 pcs.	Battery: AA 3 pcs.

Optional Accessories for Digital Hand Tachometers

Order No.	Description	Dimension	Drawing
010049	Cone Adapter, Standard	D = 1/2″	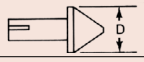
010051	Cone Adapter, 3/4″	D = 3/4″	
010052	Cone Adapter, 1-1/4″	D = 1-1/4″ d = 1/2″	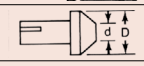
010053	Funnel Adapter, Standard	D = 1/2″	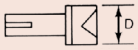
010054	Funnel Adapter, 3/4″	D = 3/4″	
010055	Measuring Wheel FPM (6″ cir), Standard	D = 1.91″	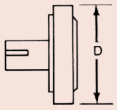
010056	Measuring Wheel FPM (12″ cir)	D = 3.82″	
010057	Measuring Wheel YPM (0.1 yard cir)	D = 1.15″	
010058	Measuring Wheel MPM (0.1 meter cir)	D = 1.25″	
010059	Reflective Tabs 1/2″ square (35 pcs)		
010060	Extension Shaft (3″ length)		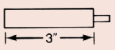

E

Mitutoyo

Zero-IT, Zero-Setter, Straight Edges

Zero-It
SERIES 950

- "Zero-It" is specially designed for Mitutoyo Test Indicators with dovetails, and functions as a quick and practical work positioning device.
- Attach "Zero-It" directly to the collet, then zero in the work position by reading the Mitutoyo Test Indicator. The hardened clamping post consists of three ODs, from top, 1/4", 3/8" and 1/2", and has hardness of approximately 58 to 60 Rockwell C.

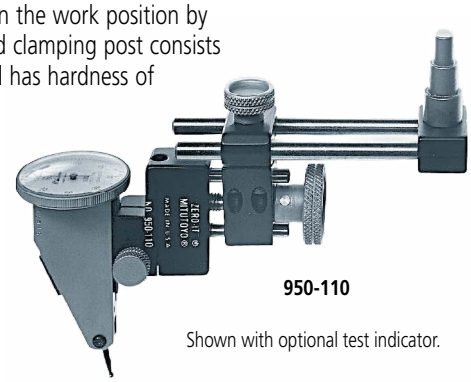

950-110

Shown with optional test indicator.

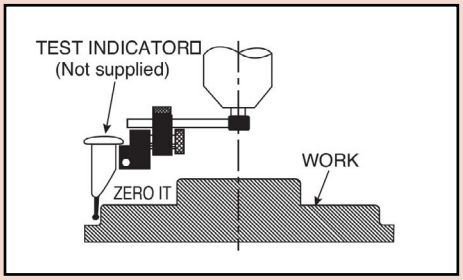

SPECIFICATIONS

Order No.	Coarse	Fine
950-110	10°	3/8"

E

Zero-Setter
SERIES 950

- Fast and sure establishment of "0" reference point with built-in indicator.
- Spring loaded setting face to safe guard against damage from over run.
- Body dia. 1.44" (36.5mm) Wooden case included.

950-111

SPECIFICATIONS

Order No.	Height	Graduation
950-111	1"	.0005"

Knife Edge Straight Edge
SERIES 528

- The test edge is approximately .004" in thickness, a cross section of which has radius to provide a straight line contact with the work surface. Straightness is ±.00005".
- For ease of inspection, the blade is dyed in black, and the upper edge is covered with a grip plate. The acute angle is 30 degrees.

528-103

528-104

SPECIFICATIONS

Order No.	Length	Cross section
528-100	2"/50 mm	25 x 6 mm
528-101	3"/75 mm	
528-102	4"/100 mm	
528-110	5"/125 mm	
528-103	6"/150 mm	
528-104	8"/200 mm	
528-105	12"/300 mm	32 x 7 mm
528-106	16"/400 mm	40 x 8 mm
528-107	20"/500 mm	50 x 10 mm

Need Support?

Precision Vices & Sine Plates

Precision Vices
Series 930

• Made of hardened, precision ground tool steel.

930-611

930-602

930-616

930-630

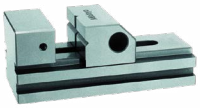
930-607

930-632

930-626

930-628

930-629

930-620

SPECIFICATIONS

Order No.	Parallelism	Squareness
930-611	0.002 mm / 100 mm	0.005 mm / 100 mm
930-601		
930-602		
930-612		
930-606		
930-607		
930-630		
930-631		
930-632		
930-633		
930-616		0.03 mm / 100 mm

Precision Vices

Order No.	Description
930-611	30MM clamping width
930-601	80MM clamping width
930-602	120MM clamping width
930-612	150MM clamping width

Precision Vices - with Pull Down Clamping Action

Order No.	Description
930-606	80MM clamping width, vertical & horizontal vee
930-607	120MM clamping width, vertical & horizontal vee
930-630	25MM clamping width, vertical vee
930-631	50MM clamping width, horizontal vee
930-632	150MM clamping width, horizontal vee
930-633	200MM clamping width, no vee

Precision Sine Vices

Order No.	Description
930-620	Precision Sine Vice - 40mm clamping width
930-621	Precision Sine Vice - 80mm clamping width - type 1
930-622	Precision Sine Vice - 120mm clamping width
930-623	Precision Sine Vice - 50mm clamping width
930-624	Precision Sine Vice - 80mm clamping width - type 2
930-625	Precision Sine Vice - 80mm clamping width - compound

Precision Vice - with Hydraulic System for Max Clamping Force of 14.7kN

Order No.	Description
930-616	150MM clamping width, hydraulic

Precision Sine Plates

Order No.	Description	Parallelism	Squareness	Remarks
930-626	Precision Sine Plate	0.002 mm / 100 mm	0.005 mm / 100 mm	With M6 clamping holes
930-628	Precision Sine Plate, compound axis			Compound-axis type with angle in two directions With M6 clamping holes
930-629	Precision Sine Plate, compound axis, magnetic chuck			Compound-axis type With lever-operated magnetic chuck

E

Mitutoyo

Steel Rules

Steel Rules
SERIES 182

- Clear graduations on satin-chrome finish.
- Stainless tempered.

182-101

182-201

182-302

SPECIFICATIONS

Metric Wide Rigid Rules

Order No.	Graduations (mm)	Range (mm)	Width (mm)
182-111	1, 0.5 (on both faces)	150	19
182-131		300	25
182-151		450	30
182-171		600	30

Metric Fully-Flexible Rules

Order No.	Graduations (mm)	Range (mm)	Width (mm)
182-211	1, 0.5 (on both faces)	150	12
182-231		300	12
182-251		450	19
182-271		600	19

Inch/Metric Semi-Flexible Rules

Order No.	Graduations*	Range	Width (in)
182-302	1/16 in, 1/32 in, 1/64 in, 1 mm, 0.5 mm	6 in/150 mm	0.51
182-303		8 in/200 mm	0.51
182-305		12 in/300 mm	0.59
182-307		20 in/500 mm	0.59
182-309		40 in/1000 mm	0.59

* Engraved on the front side only.

Inch/Metric Wide Rigid Rules

Order No.	Graduations	Range	Width (in)
182-105	1/32 in, 1/64 in, 1 mm, 0.5 mm	6 in/150 mm	0.75
182-125		12 in/300 mm	0.98
182-145		18 in/450 mm	1.18
182-165		24 in/600 mm	1.18
182-106	1/50 in, 1/100 in, 1 mm, 0.5 mm	6 in/150 mm	0.75
182-126		12 in/300 mm	0.98
182-107	1/10 in, 1/100 in, 1 mm, 0.5 mm	6 in/150 mm	0.75
182-108	1/10 in, 1/50 in, 1 mm, 0.5 mm	6 in/150 mm	0.75

Inch/Metric Fully-Flexible Rules

Order No.	Graduations	Range	Width (in)
182-205	1/32 in, 1/64 in, 1 mm, 0.5 mm	6 in/150 mm	0.47
182-225		12 in/300 mm	0.47
182-245		18 in/450 mm	0.75
182-265		24 in/600 mm	0.75
182-206	1/50 in, 1/100 in, 1 mm, 0.5 mm	6 in/150 mm	0.47
182-226		12 in/300 mm	0.47
182-207	1/10 in, 1/100 in, 1 mm, 0.5 mm	6 in/150 mm	0.47
182-208	1/10 in, 1/50 in, 1 mm, 0.5 mm	6 in/150 mm	0.47

Inch Wide Rigid Rules

Order No.	Graduations (in)	Range (in)	Width (in)
182-101	1/8, 1/16, 1/32, 1/64	6	0.75
182-121		12	0.98
182-141		18	0.71
182-161		24	1.18
182-102	1/50, 1/100, 1/32, 1/64	6	0.75
182-122		12	0.98
182-142		18	1.18
182-162		24	1.18
182-103	1/10, 1/100, 1/32, 1/64	6	0.75
182-123		12	0.98
182-143		18	1.18
182-163		24	1.18
182-104	1/10, 1/50, 1/32, 1/64	6	0.75
182-124		12	0.98

Inch Fully-Flexible Rules

Order No.	Graduations (in)	Range (in)	Width (in)
182-201	1/8, 1/16, 1/32, 1/64	6	0.47
182-221		12	0.47
182-241		18	1.18
182-261		24	0.75
182-202	1/50, 1/100, 1/32, 1/64	6	0.47
182-222		12	0.47
182-242		18	0.75
182-262		24	0.75
182-203	1/10, 1/100, 1/32, 1/64	6	0.47
182-223		12	0.47
182-243		18	0.75
182-263		24	0.75
182-204	1/10, 1/50, 1/32, 1/64	6	0.47
182-224		12	0.47

Need Service?

Steel Rules
SERIES 182

- Clear graduations on satin-chrome finish.
- Stainless tempered.

182-265

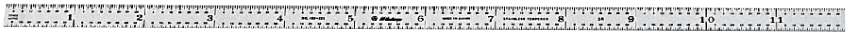

182-223

SPECIFICATIONS

Full-Flexible Rules (thickness 1/64")

Order No.	Size	Graduations				Width	Accuracy (Length)
182-201	6"(4R)	1/8	1/16	1/32	1/64th	1/2"	+.004" / –.0035" (+0.1mm / –0.09mm)
182-202	6"(16R)	1/32	1/64	1/50	1/100th	1/2"	
182-203	6"(5R)	1/32	1/64	1/10	1/100th	1/2"	
182-204	6"(3R)	1/32	1/64	1/10	1/50th	1/2"	
182-205	6" x 150mm	1/32	1/64	1mm	0.5mm	1/2"	
182-206	6" x 150mm	1/50	1/100	1mm	0.5mm	1/2"	
182-207	6" x 150mm	1/10	1/100	1mm	0.5mm	1/2"	
182-208	6" x 150mm	1/10	1/50	1mm	0.5mm	1/2"	
182-211	150mm	1mm	0.5mm	1mm	0.5mm	12mm	+.005" / –.0035" (+0.13mm / –0.09mm)
182-221	12"(4R)	1/8	1/16	1/32	1/64th	1/2"	
182-222	12"(16R)	1/32	1/64	1/50	1/100th	1/2"	
182-223	12"(5R)	1/32	1/64	1/10	1/100th	1/2"	
182-224	12"(3R)	1/32	1/64	1/10	1/50th	1/2"	
182-225	12" x 300mm	1/32	1/64	1mm	0.5mm	1/2"	
182-226	12" x 300mm	1/50	1/100	1mm	0.5mm	1/2"	
182-231	300mm	1mm	0.5mm	1mm	0.5mm	12mm	
182-141	18"(4R)	1/8	1/16	1/32	1/64	3/4"	+.006" / -.0035" (+0.15mm / -0.09mm)
182-242	18"(16R)	1/32	1/64	1/50	1/100th	3/4"	
182-243	18"(5R)	1/32	1/64	1/10	1/100th	3/4"	
182-245	18" x 450mm	1/32	1/64	1mm	0.5mm	3/4"	
182-251	450mm	1mm	0.5mm	1mm	0.5mm	18mm	
182-261	24"(4R)	1/8	1/16	1/32	1/64	3/4"	+.007" / –.0035" (+0.18mm / –0.09mm)
182-262	24"(16R)	1/32	1/64	1/50	1/100th	3/4"	
182-263	24"(5R)	1/32	1/64	1/10	1/100th	3/4"	
182-264	24"(3R)	1/32	1/64	1/10	1/50th	3/4"	
182-265	24" x 600mm	1/32	1/64	1mm	0.5mm	3/4"	
182-271	600mm	1mm	0.5mm	1mm	0.5mm	18mm	

Semi-Flexible Rules
SERIES 182

- Engraved on frontside only

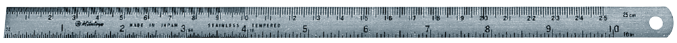

SPECIFICATIONS

Inch / Metric

Order No.	Size	Graduations					Width	Accuracy (Length)
182-301	4" x 100mm	1/2mm	1mm	1/32	1/64	1/16th	5/8"	+.004" / –.0035" (+0.1mm / –0.09mm)
182-302	6" x 150mm	1/2mm	1mm	1/32	1/64	1/16th	5/8"	
182-303	8" x 200mm	1/2mm	1mm	1/32	1/64	1/16th	5/8"	+.005" / –.0035" +0.13mm / –0.09mm)
182-305	12" x 300mm	1/2mm	1mm	1/32	1/64	1/16th	5/8"	
182-307	20" x 500mm	1/2mm	1mm	1/32	1/64	1/16th	5/8"	+.007" / –.0035" (+0.18mm / –0.09mm)
182-309	40" x 1000mm	1/2mm	1mm	1/32	1/64	1/16th	5/8"	+.008"/–.004" (+0.2mm / –0.1mm)

E

Thickness/Feeler Gages

Thickness/Feeler Gages SERIES 184

- Each leaf is marked with its thickness.
- Each leaf is detachable.

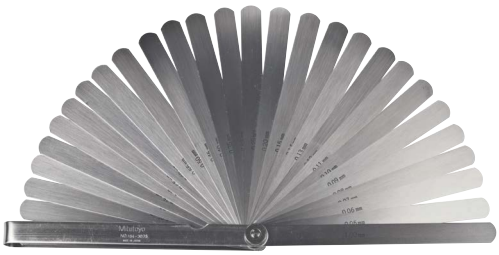

184-303S

SPECIFICATIONS

Metric

Range	Order No.	Composition of leaves	Remarks
0.05 - 1mm	**184-313S**	28 leaves: 0.05 - 0.15mm by 0.01mm, 0.2 - 1mm by 0.05mm	—
	184-303S	28 leaves: 0.05 - 0.15mm by 0.01mm, 0.2 - 1mm by 0.05mm	Long leaf
0.05 - 1mm	**184-304S**	20 leaves: 0.05 - 1mm by 0.05mm	Long leaf
0.05 - 1mm	**184-305S**	13 leaves: 0.05 - 0.3mm by 0.05mm, 0.4 - 1mm by 0.1mm	—
	184-301S	13 leaves: 0.05 - 0.3mm by 0.05mm, 0.4 - 1mm by 0.1mm	Long leaf
0.05 - 0.8mm	**184-306S**	10 leaves: 0.05 - 0.2mm by 0.05mm, 0.3 - 0.8mm by 0.1mm	—
	184-308S	10 leaves: 0.05 - 0.2mm by 0.05mm, 0.3 - 0.8mm by 0.1mm	Long leaf
0.03 - 0.5mm	**184-307S**	13 leaves: 0.03 - 0.1mm by 0.01mm, 0.2 - 0.5mm by 0.1mm, 0.15mm	—
	184-302S	13 leaves: 0.03 - 0.1mm by 0.01mm, 0.2 - 0.5mm by 0.1mm, 0.15mm	Long leaf

DIMENSIONS

Unit: mm

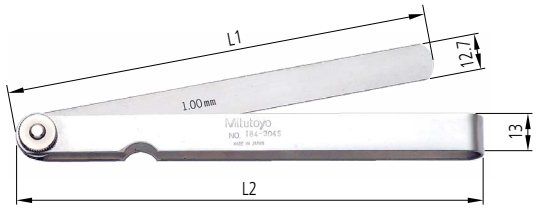

Order No.	L1	L2
184-313S	100	106
184-303S	150	156
184-304S	150	156
184-305S	100	106
184-301S	150	156
184-306S	100	106
184-308S	150	156
184-307S	100	106
184-302S	150	156

Technical Data

Accuracy of Leaves Thickness

Nominal Thickness	Tolerance
0.01mm to less than 0.06mm:	±0.003mm
0.06mm to less than 0.10mm:	±0.004mm
0.10mm to less than 0.35mm:	±0.005mm
0.35mm to less than 0.65mm:	±0.008mm
0.65mm to less than 3.0mm:	±0.01mm

Protractor SERIES 968

Basegular Base Protractor's scale plate and indicator blade are made entirely of stainless steel. (**968-201**) (**968-202** and **986-203** Satin chrome finish). With 6″ arm.
Accuracy: +/- 1°

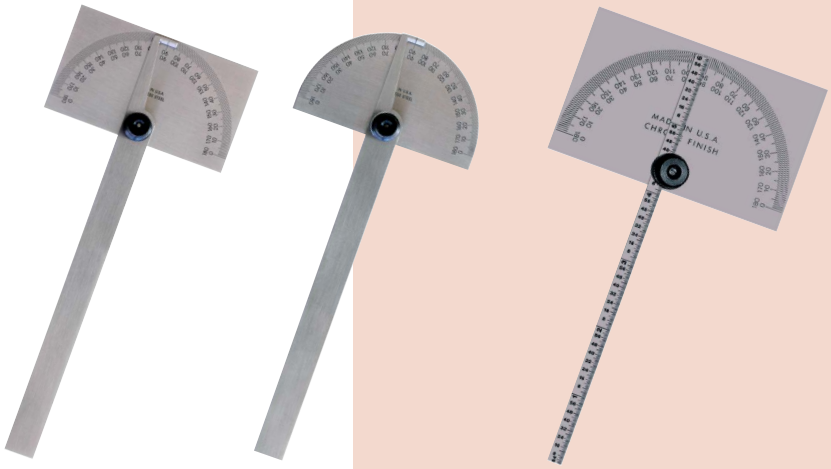

SPECIFICATIONS

Order No.	Graduation	Remarks
968-201	1°	Protractor Graduation: 0°–90°,90°–180°,180°–90°, 90°–0°
968-202		Semi-Circle: 0°-180°, 180°-0°
968-203*		Rectangle: 0°-180°, 180°-0°

*Arm Graduations: 32nds and 64ths

DIMENSIONS

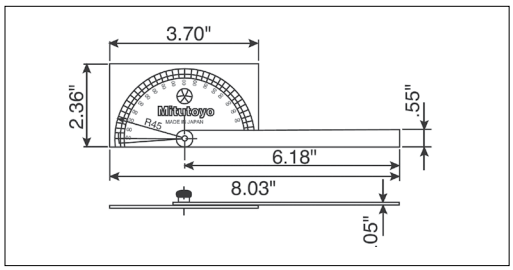

Need Calibration?

Digital Universal Protractor SERIES 187

- Data output function makes it easy to see the statistical data.
- Can be attached to height gages. Gage holder (**950749,** inch or **950750**, metric)
- Setting preset value.
- Removable blade.

187-551

Technical Data

Range:	-360° to +360°
Tolerance:	±2′ (±0.03°)
Repeatability:	1′
Resolution:	1′ (0.01°)
Battery life:	2,000 hours

Function

Presetting

Standard Accessories

12" Blade (Order No. **187-103**)
Battery (CR2032 **64PTS301**)
Clamp box

Optional Accessories

187-104	6" blade
187-103	12" blade
187-105	Acute angle attachment
950749	Clamp box for Inch Height Gage
950750	Clamp box for Metric Height Gage
905338	Connecting cable (40" / 1m)
905409	Connecting cable (80" / 2m)

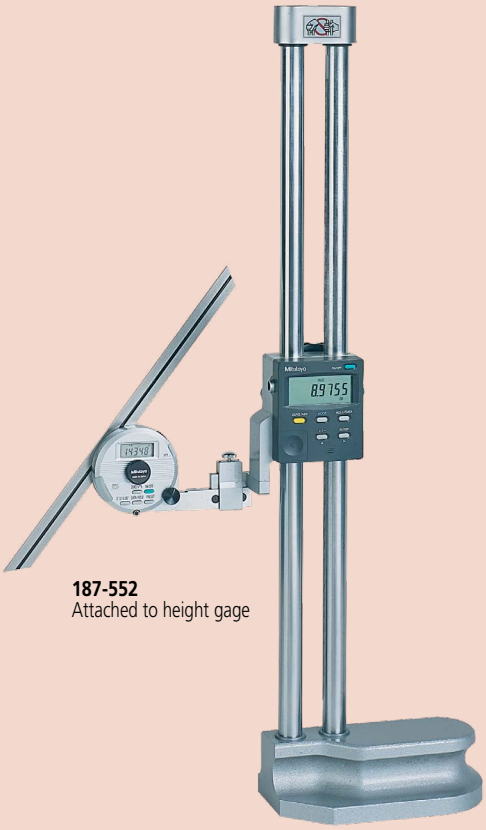

187-552
Attached to height gage

SPECIFICATIONS

Order No.	187-552	187-551	187-502	187-501
Blade	12″ (187-103)	6″ (187-104)	300 mm (187-107)	150 mm (187-106)
Display	LCD - 5 digit, (-) sign, character height 6.5mm			
Measuring range	-360˚ ~ +360˚			
Resolution	1′ (0.01˚)			
Accuracy	± 2′ (±0.03˚)			
Repeatability	1′ (0.01˚)			
Mass	1.45 lbs (659g)			
Dust / Water protection level	IP40			
Function	Zero, Direction select, Data output / Data hold, Preset, Switchable Seagesimal or Decimal Natation			
Max. response speed	3 rps			
Battery	Lithium battery (CR2032) 1 pc. (Part No. **64PTS301**)			
Battery life	2,000 hours			
Alarm	Battery voltage low, Over speed error (Err)			
Temperature	Operation temperature: 0 to 40˚C Storage temperature: -10 to 60˚C			

DIMENSIONS

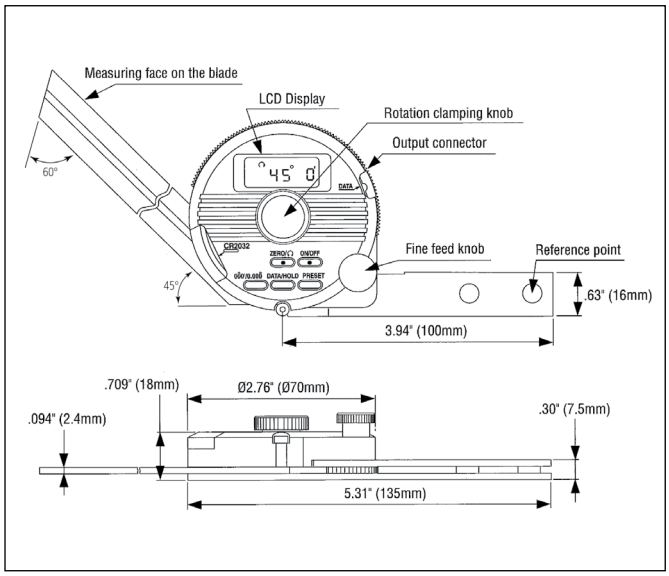

E

Mitutoyo

Protractors

Universal Bevel Protractor SERIES 187

- High-precision angle gage for accurate angle measurement of machines, molds, and jigs.
- Can be attached to height gages.

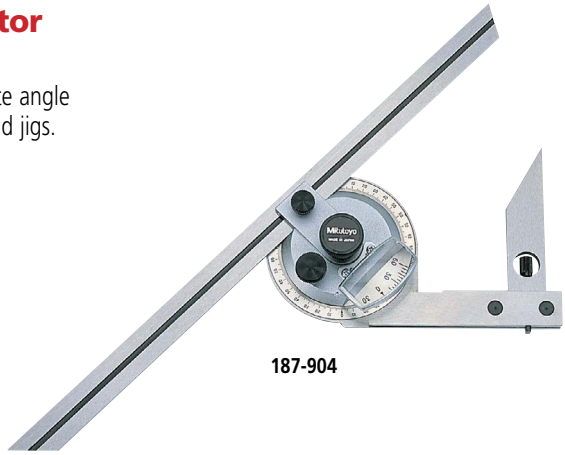

187-904

Technical Data

Graduation: 1˚, 5min. (0˚ - 90˚ - 0˚)
Accuracy ±5′

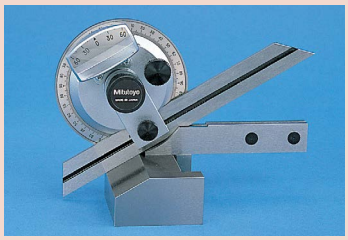

SPECIFICATIONS

Inch

Order No.	Blade length (in)	Remarks
187-902-10	6, 12	w/60°, 45°, 30° edges
187-904-10	6	w/60°, 45° edges
187-906-10	12	w/60°, 45° edges

Metric

Order No.	Blade length (mm)	Remarks
187-901-10	150, 300	w/60°, 45°, 30° edges
187-907-10	150	w/60°, 45° edges
187-908-10	300	w/60°, 45° edges

Accessories and Parts

Order No.	Remarks
187-103	12″ Blade
187-104	6″ Blade
187-105	Acute angle attachment
950749	Clamp box for Inch Height Gages
950750	Clamp box for Metric Height Gages

DIMENSIONS

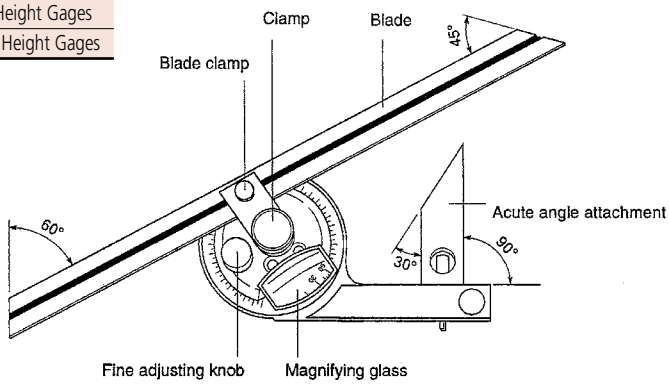

Bevel Protractor SERIES 187

- Consists of three sheets of stainless steel, the middle one of which is made for angle measurements.

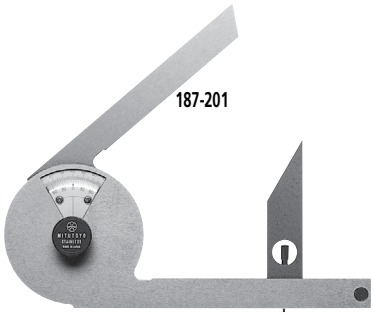

187-201

Technical Data

Graduation: 5 min. (0° - 90° - 0°)
Blade edge angle: 30° and 60°
Diameter: 2.56″ / 70mm

SPECIFICATIONS

Order No.	Graduation	Remarks
187-201	1˚ / 5 min	Center black knob locks the blade position Protractor Graduation: 0°–90°, 90°–0°

Find a Distributor

Digital Protractor
SERIES 950

These digital protractors present inclination values on an easy-to-read LCD. The measurements are generated by an electronic gravity sensor and processed by the latest low-power electronic circuit technology.

- Full 360° range (90° x 4).
- Machined aluminum frame.
- Alternate reference (zero).
- Reading hold.
- Simple calibration requiring no special fixtures.
- Display remains upright to view at all angles. (950-317, Pro 360 Model).
- RS232C output. (950-318 Pro 3600 Model).
- Supplied in fitted carrying case.

Front View

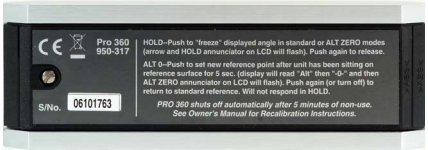

950-317 Back View

950-318 Back View

SPECIFICATIONS

Order No.	950-317	950-318
Model	Pro 360	Pro 3600
Range	360° (90°x4)	360° (90°x4)
Resolution	0.1°	0.01° (0° to 9.99°) 0.1° (10° to 90°)
Accuracy*1	±0.1°Level ±10°, Plumb ±10° ±0.2° Maximum error	±0.05° (0° to 10°) ±0.1° (80° to 90°) ±0.2° (10° to 80°)
Repeatability	±0.1°	±0.05°
Cross Axis Error	Minimal	Minimal
Battery Life	500 Hrs. Standard 9-Volt Battery	500 Hrs. Standard 9-Volt Battery
Temperature Operation Storage	-5°C to 50°C (23° to 122°F) -20°C to 65°C (-4°F to 149°F)	-5°C to 50°C (23° to 122°F) -20°C to 65°C (-4°F to 149°F)
Weight	289g (10.2oz.)	295g (10.4oz.)
Output	N/A	RS-232C Compatible
Standard Accessories	Plastic Case	Plastic Case

*1 ±Represents clockwise or counter-clockwise slope.

DIMENSIONS

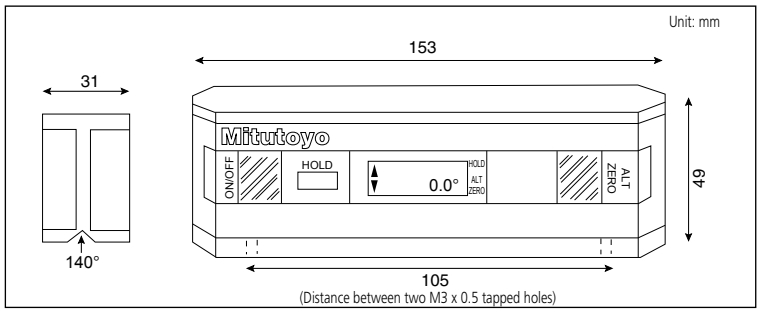

Optional Accessories

50AAA983A RS-232C Output cable w/foot switch

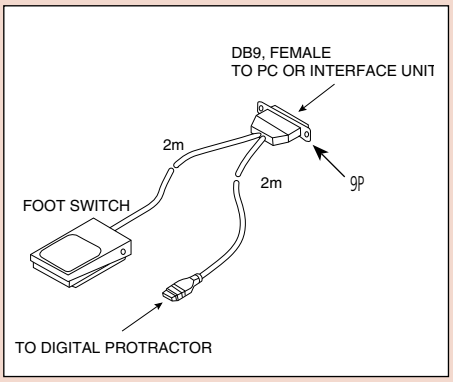

50AAA983A RS-232C Output cable w/foot switch 10P-9P

E

Mitutoyo

Radius & Pitch Gages

Radius Gages
SERIES 186

- Radius size is stamped on each gage.
- Both concave and convex radius gages become a pair.
- With a locking clamp.

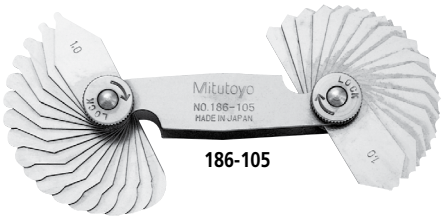

186-105

SPECIFICATIONS

Inch

Range	Order No.	Composition of leaves	Remarks
1/32" - 17/64"	**186-103**	16 leaves: 1/32" - 17/64" by 64ths	90° arc
1/32" - 1/4"	**186-101**	15 pairs: 1/32" - 1/4" by 64ths	180° arc
17/64" - 1/2"	**186-102**	16 pairs: 17/64" - 1/2" by 64ths	180° arc
9/32" - 33/64"	**186-104**	16 leaves: 9/32" - 33/64" by 64ths	90° arc

Metric

Range	Order No.	Composition of leaves	Remarks
0.4 - 6mm	**186-110**	18 leaves: 0.4, 0.8, 1, 1.2, 1.5, 1.6mm, 1.75 - 3mm by 0.25mm, 3.5 - 6mm by 0.5mm	90° arc
1 - 7mm	**186-105**	34 pairs: 1 - 3mm by 0.25mm 3.5 - 7mm by 0.5mm	180° arc
7.5 - 15mm	**186-106**	32 pairs: 7.5 - 15mm by 0.5mm	180° arc
15.5 - 25mm	**186-107**	15 pairs: 15.5 - 20mm by 0.5mm, 21 - 25mm by 1mm	180° arc

Technical Data

Accuracy: ±.002″

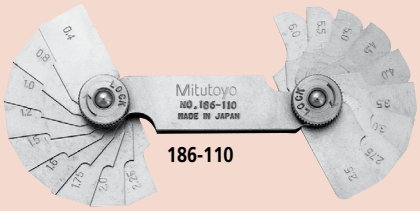

186-110

Pitch Gages
SERIES 188, 950

- Thread pitch size is stamped on each gage.
- Metric, Unified, and Whitworth screw pitch gages.

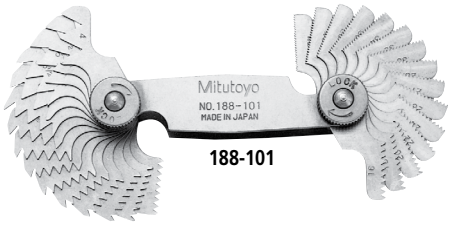

188-101

SPECIFICATIONS

Metric Screw Pitch Gages (60˚)

Range	Order No.	Composition of leaves
0.25 - 2.5mm	**188-153**	28 leaves: 0.25, 0.30. 0.35, 0.40, 0.45, 0.50, 0.55, 0.60, 0.65, 0.70, 0.75, 0.80, 0.85, 0.90, 1.00, 1.10, 1.20, 1.25, 1.30, 1.40, 1.50, 1.60, 1.70, 1.75, 1.80, 1.90, 2.00. 2.50 mm
0.35 - 6mm	**188-130**	22 leaves: 0.35, 0.4, 0.45, 0.5, 0.6, 0.7, 0.75, 0.8, 1, 1.25, 1.5, 1.75, 2, 2.5, 3, 3.5, 4, 4.5, 5, 5.5, 6mm and 60° angle gage
0.4 - 7mm	**188-122**	21 leaves: 0.4, 0.5, 0.7, 0.75, 0.8, 0.9, 1, 1.25, 1.5, 1.75, 2, 2.5, 3, 3.5, 4, 4.5, 5, 5.5, 6, 6.5, 7mm
0.4 - 7mm	**188-121**	18 leaves: 0.4, 0.5, 0.75, 1, 1.25, 1.5, 1.75, 2, 2.5, 3, 3.5, 4, 4.5, 5, 5.5, 6, 6.5, 7mm

Unified Screw Pitch Gages (60˚)

Range	Order No.	Composition of leaves
4 - 42 TPI	**188-111**	30 leaves: 4, 4-1/2, 5, 5-1/2, 6, 7, 8, 9, 10, 11, 11-1/2, 12, 13, 14, 15, 16, 18, 20, 22, 24, 26, 27, 28, 30, 32, 34, 36, 38, 40, 42 TPI

Note: Metric and Unified Pitch Gage Set (**188-151**) is available. It consists of **188-122** (Metric) and **188-111** (Unified).

Metric and Unified Screw Pitch Gage Set (60˚)

Range	Order No.	Composition of leaves
0.4 - 7mm / 4 - 42 TPI	**188-151**	51 leaves: Set of 188-122 and 188-111
0.5 - 6mm / 4 - 56 TPI	**188-152**	28 leaves: 4, 6, 8, 10, 11, 11-1/2, 12, 13, 16, 20, 28, 32, 40, 56 TPI 0.50, 0.75, 1.00, 1.25, 1.50, 1.75, 2.00, 2.50, 3.00, 3.50, 4.00, 4.50, 5.00. 6.00 mm

Whitworth Screw Pitch Gages (55˚)

Range	Order No.	Composition of leaves
4 - 42 TPI	**188-101**	30 leaves: 4, 4-1/2, 5, 5-1/2, 6, 7, 8, 9, 10, 11, 11-1/2, 12, 13, 14, 15, 16, 18, 20, 22, 24, 26, 27, 28, 30, 32, 34, 36, 38, 40, 42 TPI
4 - 60 TPI	**188-102**	28 leaves: 4, 4-1/2, 5, 6, 7, 8, 9, 10, 11, 12, 13, 14, 16, 18, 19, 20, 22, 24, 25, 26, 28, 30, 32, 34, 36, 40, 48, 60 TPI

Technical Data

TPI	Metric	Accuracy	
		Pitch (mm)	Angular (minutes)
4-6	6.35-4.23	±0.05	±35
7-12	3.63-2.12	±0.05	±40
13-25	1.95-1.02	±0.05	±45
26-48	0.98-0.53	±0.05	±50
60	0.42	±0.05	±60

Got Questions?

Radius Gages-Sets
SERIES 186

Radius Gages are recommended for checking or laying out concave or convex radii. An individual gage for each dimension makes it possible to verify radius or fillet dimensions easier, faster and more accurately in machining, layout, inspection and pattern-making work. The measuring surfaces are precisely finished with smooth, accurate edges. Radius gages are available separately or in six sets. Each radius gage has five measuring locations, and it is identified with its particular radius dimensions. The gages have a satin or dull-chrome finish.

The holding cases, provided to protect the sets of radius gages, have indexed pockets to facilitate the selection of the proper size gage. A 4″ long holder is furnished with Set No. 186-901 to make it possible to check radii in confined or hard-to-reach locations.

186-901

Accuracy: ±.0016" / 0.04mm

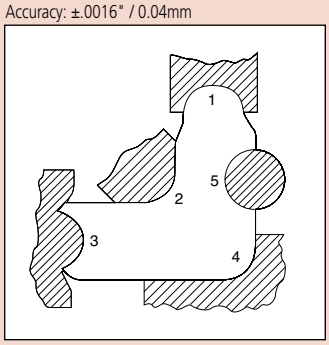

5 concave and convex radii per leaf.

SPECIFICATIONS

Inch

Order No.	No. of Leaves	Sizes	Remarks
186-901	25	1/64″–17/64″ by 64ths and 9/32″–1/2″ by 32nds	Holder
186-903	17	1/64″–17/64″ by 64ths	
186-904	8	9/32″–1/2″ by 32nds	
186-905	8	9/16″–1″ by 16ths	
186-906	26	.010–.030″ by .005″ .040–.100″ by .010″ .120–.300″ by .020″ .350–.500″ by .050″	
186-907	10	.550–1″ by .050″	

Replacement holder: **950753**

Metric

Order No.	No. of Leaves	Sizes	Remarks
186-902	26	0.5 - 13mm by 0.5mm	90° arc

Decimal

Radius	Part No.	Radius	Part No.
.010″	**211798**	.240″	**211816**
.015″	**211799**	.260″	**211817**
.020″	**211800**	.280″	**211818**
.025″	**211801**	.300″	**211819**
.030″	**211802**	.350″	**211820**
.040″	**211803**	.400″	**211821**
.050″	**211804**	.450″	**211822**
.060″	**211805**	.500″	**211823**
.070″	**211806**	.550″	**211824**
.080″	**211807**	.600″	**211825**
.090″	**211808**	.650″	**211826**
.100″	**211809**	.700″	**211827**
.120″	**211810**	.750″	**211828**
.140″	**211811**	.800″	**211829**
.160″	**211812**	.850″	**211830**
.180″	**211813**	.900″	**211831**
.200″	**211814**	.950″	**211832**
.220″	**211815**	1.000″	**211833**

Fraction

Radius	Part No.	Radius	Part No.
1/64″	**201441**	5/16″	**201459**
1/32″	**201442**	11/32″	**201460**
3/64″	**201443**	3/8″	**201461**
1/16″	**201444**	13/32″	**201462**
5/64″	**201445**	7/16″	**201463**
3/32″	**201446**	15/32″	**201464**
7/64″	**201447**	1/2″	**201465**
1/8″	**201448**	9/16″	**211790**
9/64″	**201449**	5/8″	**211791**
5/32″	**201450**	11/16″	**211792**
11/64″	**201451**	3/4″	**211793**
3/16″	**201452**	13/16″	**211794**
13/64″	**201453**	7/8″	**211795**
7/32″	**201454**	15/16″	**211796**
15/64″	**201455**	1″	**211797**
1/4″	**201456**		
17/64″	**201457**		
9/32″	**201458**		

Mitutoyo

Shaft Measuring Kit

Modular Shaft Measuring Kits

The Shaft Measurement System is an easy-set-up, easy-to-use modular fixture kit that can be used for measuring diameters, runouts and lengths of cylindrical components. Modules are available for mounting Indicators, Linear Gages, and Laser Scan Micrometers. Modules attach to and can be adjusted along Rails that can be mounted to various positions on the Base Plate. Each module has everything needed to measure, such as gage mounts, pneumatic overcome assembly (tubing, etc.), contact point for pneumatic fork, mounts for rail system/gage (Indicators, Linear Gages and Laser Scan Micrometers are optional). The pneumatic system will retract spindles when air is cut to help avoid potential damage to components. When air is supplied the pneumatic retraction is overcome, so each spindle contacts the component using its own spring force. Mounting a sample component is simple using optional V-blocks or center supports. Contact Mitutoyo America for more information.

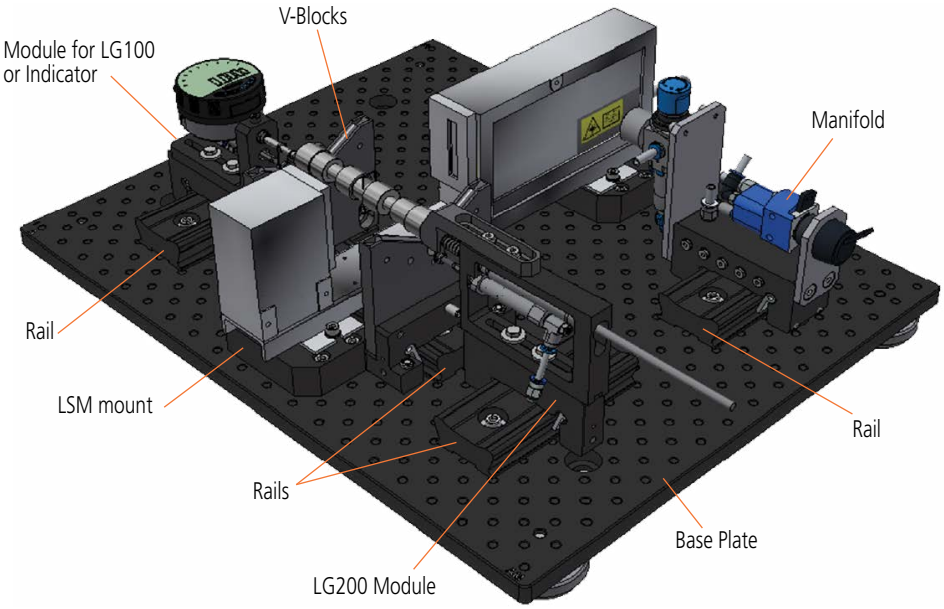

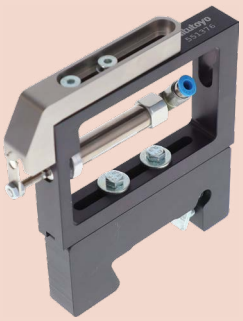

K551376

K551440

K551441

K551594

Components

Order No.	Description
	Base Plates
K551382	Base Plate w/ feet (500mm x 500mm)
	Mounting Rails - Attaches to Base Plates
K551362	Rail mount, L=125mm
K551364	Rail mount, L=175mm
	Gage Mounting - Attaches to Rails
K551376	Linear Gage Module (slider): Pencil probe type
K551377	Indicator Mount (slider): Ø8mm stems only
K551591	LSM-30-A Mounting Brackets (Fixed - attaches to basen plate, not rails)
	Workpiece Mounts and Supports - Attaches to Rails
K551440	Center Mount (Fixed)
K551441	Center Mount (Adjustable)
K551594	V-Block ø1 to ø 20mm (1 pc), (**K551593 required**)
K551596	V-Block: ø20 to ø40mm (1 pc), (**K551593 required)**
K551597	V-Block: ø40 to ø60mm (1 pc), (**K551593 required**)
K551593	V-block Mounting Base
K551592	Stop bracket
	Control Unit - Attaches to Rails
K551378	Pneumatic Control Manifold, Switch-operated
	Accessories
K551306	Plate (125mm X 125mm)
K580770	Demo workpiece

Bench Centers

Bench Center

- Provides precision measurement of concentricity verification on cylindrical parts using optional indicators, test indicators, or Linear Gages
- Indicator/gage clamp for 3/8" & 8mm diameter stems
- Quick release lever allows for fast loading/ unloading of parts
- Repositioning of the indicator mounting and head assemblies is fast and easy using the locking levers
- Contact Mitutoyo America for more information
- Max Load: 10kg. Higher-rated versions available.

K551424

K551424

Shown with optional indicator, **543-702B**

K551424

Dual Rail Version - Faster Positioning for Indicator Slide

Part No.	Description
K551424	QUICK-CHECK Bench Center 14" / 360mm, with rail slide
K551429	QUICK-CHECK Bench Center 24" / 600mm, with rail slide
K551430	QUICK-CHECK Bench Center 40" / 1000mm, with rail slide

Single Rail Versions

Part No.	Description
K551399	QUICK-CHECK Bench Center 14" / 360mm
K551425	QUICK-CHECK Bench Center 24" / 600mm
K551426	QUICK-CHECK Bench Center 40" / 1000mm

Talk to Sales

Black Granite Surface Plate

Black Granite Surface Plate
SERIES 517

- Natural granite seasoned for thousands of years is free from deterioration or dimensional change over time.
- Granite surface plates have many advantages over cast iron surface plates:
  Twice as hard as cast iron.
  Minimal changes in dimension due to temperature changes.
  Free from wringing, so there is no interruption of work.
  Free from burrs or protrusions because of the fine grain structure and insignificant stickiness; this ensures a high degree of flatness over a long service life and causes no damage to other parts or instruments.
- Trouble-free operation for use with magnetic materials.
- Long life and rust-free, resulting in low maintenance costs.
- Mitutoyo granite surface plates meet or exceed ASME B89.7.3 specifications. Each surface plate is shipped with a Certificate of Accuracy which guarantees its accuracy and verifies its traceability to NIST.
- All plates from 48"x108" and larger are machine base gray granite. Smaller plates are black granite.
- Surface plates, to size of specifications other than standard, available by special order.
- All Mitutoyo surface plates shipped F.O.B. Santa Fe Springs, CA

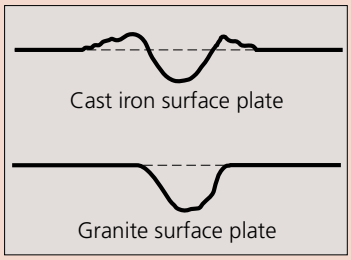

Steel Stands
SERIES 517

Steel stands for supporting black granite surface plates, at working levels, are available either stationary or with casters. Sizes and weights are given below.

Note: Working height is 36" unless otherwise specified.

Where to Buy

Steel Stands

SPECIFICATIONS

Order No.	Grade	Size (Inch) W×D	Size (Inch) H	Flatness (µinch)	Mass (lbs)	Optional stands Stationary	Optional stands with Casters
517-700-10	AA	8 X 12	2	50	28	—	—
517-800-10	A			100			
517-900-10	B			200			
517-701-10	AA	9 X 12	3	50	40	—	—
517-801-10	A			100			
517-901-10	B			200			
517-702-10	AA	12 X 12	3	50	54	—	—
517-802-10	A			100			
517-902-10	B			200			
517-703-10	AA	12 X 18	3	50	81	**517-950-10**	**517-950-11**
517-803-10	A			100			
517-903-10	B			200			
517-704-10	AA	18 X 18	4	50	156	**517-951-10**	**517-951-11**
517-804-10	A		3	100	121		
517-904-10	B			200	121		
517-705-10	AA	18 X 24	4	80	208	**517-952-10**	**517-952-11**
517-805-10	A		3	160	162		
517-905-10	B			320	162		
517-706-10	AA	24 X 24	4	80	278	**517-954-10**	**517-954-11**
517-806-10	A		3	160	216		
517-906-10	B			320	216		
517-708-10	AA	24 X 36	6	100	601	**517-956-10**	**517-956-11**
517-808-10	A		4	200	416		
517-908-10	B			400	416		
517-709-10	AA	24 X 48	6	150	802	**517-957-10**	**517-957-11**
517-809-10	A			300			
517-909-10	B			600			
517-711-10	AA	30 X 48	6	180	1,002	**517-961-10**	**517-961-11**
517-811-10	A			360			
517-911-10	B			720			
517-713-10	AA	36 X 36	6	150	902	**517-963-10**	**517-963-11**
517-813-10	A			300			
517-913-10	B			600			
517-714-10	AA	36 X 48	6	200	1,203	**517-964-10**	**517-964-11**
517-814-10	A			400			
517-914-10	B			800			
517-715-10	AA	36 X 60	8	250	1,966	**517-965-10**	**517-965-11**
517-815-10	A		6	500	1,503		
517-915-10	B			1000	1,503		
517-716-10	AA	36 X 72	10	300	2,914	**517-966-10**	**517-966-11**
517-816-10	A		8	600	2,350		
517-916-10	B		6	1200	1,804		
517-717-10	AA	48 X 48	8	200	2,097	**517-967-10**	**517-967-11**
517-817-10	A		6	400	1,603		
517-917-10	B			800	1,603		
517-718-10	AA	48 X 60	8	300	2,621	**517-968-10**	**517-968-11**
517-818-10	A		6	600	2,004		
517-918-10	B		6	1200	2,004		
517-719-10	AA	48 X 72	10	350	3,885	**517-969-10**	**517-969-11**
517-819-10	A		8	8	3,145		
517-919-10	B		6	6	2,405		
517-721-10	AA	48 X 96	12	500	5,920	**517-971-10**	**517-971-11**
517-821-10	A		10	1000	4,933		
517-921-10	B		8	2000	3,947		

E

Mitutoyo

Featured Products

ABSOLUTE Digimatic Indicator

ID-CNX (Digimatic S1 supported)

Refer to page F-5 for details.

Dial Indicator

Series 1, 2, 3, 4 & Back Plunger

Refer to page F-26 for details.

Dial Test Indicator

Series 513 — Standard, 20° tilted, Vertical, Horizontal, Universal & Pocket Type

Refer to page F-75 for details.

INDEX

Digimatic Indicators

ABSOLUTE, Back-lit Screen, ID-FNX (Digimatic S1 supported)	F-3,4
ABSOLUTE, Standard, ID-CNX (Digimatic S1 supported)	F-5,6
ABSOLUTE, IP66 Water-proof, ID-N/B	F-7,8
ABSOLUTE, Economical, ID-SX2	F-9,10
ABSOLUTE, Slim, Economical, ID-U	F-11,12
ABSOLUTE, Peak-Value Hold, ID-CAX	F-13,14
ABSOLUTE, for Bore Gage, ID-CGX	F-15,16
ABSOLUTE, Calculation, ID-CRX	F-17,18,19
ABSOLUTE, Signal Output Function, ID-CJX	F-20,21
High Accuracy, High Functionality, ID-H	F-22,23

Display Unit

EC Counter	F-24

Dial Indicators

Dial Indicator Features	F-25
Compact Type, Extra Small Diameter	F-26,27
Compact Type, Small Diameter	F-28,29,30
Compact One Revolution Type	F-31,32
Back Plunger Type Series 1	F-33,34
Standard Type, 0.01 mm Graduation	F-35,36
Standard Type, 0.001 mm & 0.005 mm	F-37,38
Water-proof Type, 0.01 mm & 0.001 mm	F-39,40
Standard Type, Inch Reading	F-41,42
Standard One Revolution Type	F-43,44,45
Standard, One Revolution, Water-proof	F-46,47,48
Standard, One Revolution, Lightweight	F-49,50,51
Long Stroke Type	F-52,53,54
ANSI/AGD, Metric	F-55
Special Feature Models	F-56,57
Back Plunger Type Series 2	F-58,59
Long Stroke Type, Large Diameter	F-60,61,62
Contact Points	F-63,64,65,66,67,68
Interchangeable Back Covers	F-69,70
Lifting Levers, Cables and Air Lifter	F-71,72
Limit Stickers, Colored Caps and Repair Tools	F-73,74

Dial Test Indicators

Dial Test Indicator Features	F-75
Standard	F-76,77
Standard (20° Tilted Face), Vertical, and Horizontal	F-78,79
Universal	F-80
Pocket	F-81,82,83
Contact points, Stems and Holders	F-84,85,86

Indicator Calibration

i-Checker IC2000	F-87
UDT-2 Calibration Tester	F-88
Calibration Tester	F-88

Dial Indicator Applications

Thickness Gages	F-89,90,91,92,93,94
Contact Force Gage	F-99
Dial Snap Gage	F-100

Stands

Magnetic Stands	F-101,102,103
Dial Gage Stands	F-104,105
Transfer Stands	F-106
Comparator, Cast Iron Base	F-107
Comparator, Granite Base	F-108,109
Mounting Fixtures	F-110

MeasurLink® ENABLED
Data Management Software by Mitutoyo

Measurement Data Network System

MeasurLink® is a measurement data management system based on databases (SQL Server). You can build a network to manage the measurement results and measuring instruments simply by combining the required functions.

MeasurLink® is a registered trademark of Mitutoyo Corporation in Japan and Mitutoyo America Corporation in the United States.

IP66

IP Codes

The code indicates the degree of protection against the ingress of foreign materials and water as defined in the IEC standard (IEC 60529). The number indicates the protection level.
(Refer to page 3)

TÜVRheinland CERTIFIED
Dust- and Water-Protected
www.tuv.com ID 0000040191

TÜV Rheinland Certification Marks

All products with the marks have passed the IP test carried out by the German accreditation organization, TÜV Rheinland.

Mitutoyo guarantees the product quality
PROPRIETARY INSPECTION CERTIFICATE

Measuring Instruments Shipped with Inspection Certificate

Mitutoyo guarantees product quality as a leading precision measuring instrument manufacturer and ships measuring instruments with an inspection certificate that includes inspection data so that customers can use them with confidence.

ABSOLUTE™

ABSOLUTE Linear Encoder

Mitutoyo developed the unique ABSOLUTE method to retain position information after the power is turned off.
The origin is set once - thereafter the live position is displayed when the power is turned on.

DIGIMATIC S1

DIGIMATIC S1

Mitutoyo's proprietary bidirectional serial communication protocol enables a connected PC to execute measurement data output, setting and control of a measuring instrument, and capture of information of a specific measuring instrument.

Precautions for use (Preload)

Origin setting of Digimatic Indicators

Repeatability in the range of 0.2 mm from the lowest rest point is not guaranteed for Digimatic indicators. When setting the origin or presetting a specific value, be sure to preload the spindle at least 0.2 mm from the lowest rest point.

Indicators

MeasurLink ENABLED
Data Management Software by Mitutoyo

ABSOLUTE™

DIGIMATIC S1

High-performance ABS Digimatic Indicator ID-FNX (Digimatic S1 supported) SERIES 543 — with Back-lit LCD Screen

- **ID-F** Series is a next-generation indicator with various new functions, supporting bidirectional communication. With the addition of the appropriate data cable and software, remote zero setting and gage setting can all be implemented from a connected PC, thereby improving your work efficiency.
- This series adopts an external power supply to operate a bright backlit display. The display color helps you make tolerance judgment at a glance.

Green indication for GO judgment

Red indication for ±NG judgment

- The next calibration due date can be set with an alarm to improve instrument management.
- The ABS (ABSOLUTE) scale restores the last origin position* automatically when the indicator is turned on, and realizes high reliability by eliminating over-speed errors.

* Refer to "Precautions for use" on page F-2.

Functions

- Peak detection (MAX/MIN)
- Runout range measurement (MAX - MIN)

Note: Peak detection
1) Sampling rate:
Resolution 0.0005 mm 50 readings/s
Resolution 0.001 mm, 0.01 mm 500 readings/s
2) Capturing speed:
Resolution 0.0005 mm 50 μm/s
Resolution 0.001 mm, 0.01 mm 500 μm/s

- Zero-setting (INC system)
- Presetting (ABS system)
- Measuring direction switching
- Tolerance judgment
- Resolution switching
- Simple calculation f(x) =Ax
- Analog resolution selection
- Data hold (when not connected to an external device)
- Function Lock
- Calibration schedule warning
- Data output
- Display rotation (330°)
- Error alarm display

F

SPECIFICATIONS

Inch / Metric ASME/ANSI/AGD: Type Ø3/8" stem, #4-48UNF thread

Order No.	Range	Resolution	Accuracy (in)*	Hysteresis	Repeatability	Measuring force (N)	Power source	Mass (g)
543-856-A	0.5 in/ 12.7 mm	0.00002/0.00005/ 0.0001/ 0.0005/ 0.001 in, 0.005/0.001/ 0.01 mm (selectable)	±0.00010	0.00008	0.00008	1.5 or less	AC adapter (5.9 V)	200
543-856B-A (flat back)								170
543-852A	1 in/ 25.4 mm					1.8 or less		240
543-854A	2 in/ 50.8 mm		±0.00016			2.3 or less		330
543-858A			±0.00012					

Metric ISO/JIS Type: Ø8mm stem, M2.5x0.45 thread

Order No.	Range (mm)	Resolution (mm)	Accuracy (mm)*	Hysteresis H_{MPE}	Repeatability R_{MPE}	Measuring force (N)	Power source	Mass (g)
543-855-A	12.7	0.0005/ 0.001/0.01 (selectable)	0.0025	0.002	0.002	1.5 or less	AC adapter (5.9 V)	180
543-855B-A (flat back)								170
543-851A	25.4					1.8 or less		240
543-853A	50.8		0.004			2.3 or less		330
543-857A			0.003					

Included Power Adapter: **06AGZ369JA**

Refer to the Indicators Brochure (**2340**) for more details.

Video

Find a Distributor

Optional Output Devices

Order No.	Description
Wired	
264-020	USB Input tool (**IT-020U**)
- 06AGL011	Connecting Cable (**1m**)
- 06AGL021	Connecting Cable (**2m**)
06AGQ001F	USB Input Tool Direct (**2m**)
Wireless	
264-622	Transmitter (**IP67**)
264-626	Transmitter (**IP67, Bluetooth**)
264-623	Transmitter (**Buzzer**)
264-627	Transmitter (**Buzzer, Bluetooth**)
- 02AZF700	Connecting Unit (**Adapter**)*1
- 02AZF670	Transmitter Mounting Bracket*2
- 02AZG011	Connecting Cable
- 02AZG021	Connecting Cable (**foot switch compatible**)

Note: Model uses connector type "SF"
*1 For 0.5" Models ONLY
*2 For use on 1" and 2" Models
For additional accessories refer to pages F-63 to F-74

- Lifting Options
  Lifting lever:
  21EZA198 (0.5 inch /12.7 mm type)
  Lifting cable (mounts to spindle stop screw):
  21JZA295 Lifting cable (with auto-stop function): 0.5 inch /12.7 mm type
  21JZA301 (overall length 300 mm) 0.5 inch/12.7 mm type
  Lifting knob:
  21EZA105 (0.5 inch /12.7 mm type)
  21EZA197 (1 inch /25.4 mm type)
  21EZA200 (2 inch /50.8 mm type)
  Lifting lever: **21EAA426**
  (supplied with 25.4 mm and 50.8 mm models as standard.)
  903594 Pneumatic Lifting Attachment (0.5"/12.7mm models only)
- Auxiliary spindle spring:
  02ACA571 (1 inch /25.4 mm type)
  02ACA773 (2 inch /50.8 mm type)
- Measurement data collection software
  USB-ITPAK V3.0: **06AGR543**
- Contact points for Mitutoyo's Digimatic indicators (optional)
  Refer to pages F-63 to F-68 for details.
- Interchangeable back covers (optional)
  Refer to pages F-69 to F-70 for details.
- Measuring stands (optional)
  Refer to pages F-97 to F-103 for details.

DIMENSIONS

ASME / ANSI / AGD Type

Unit: in

543-856

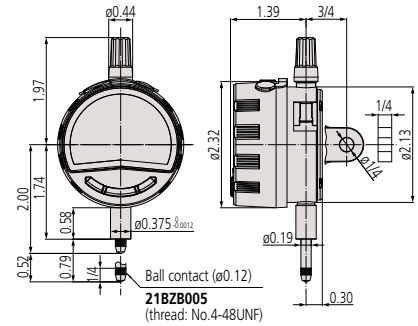

543-854, 543-858

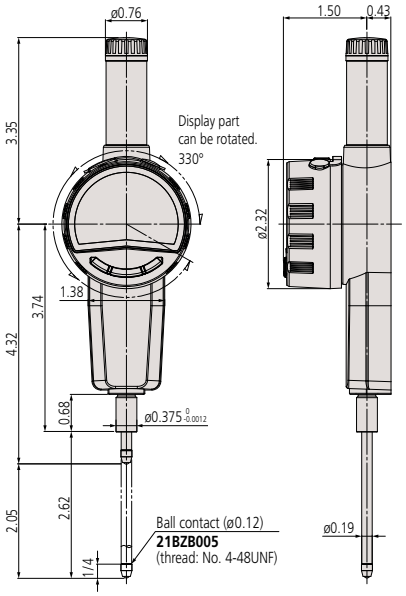

543-852

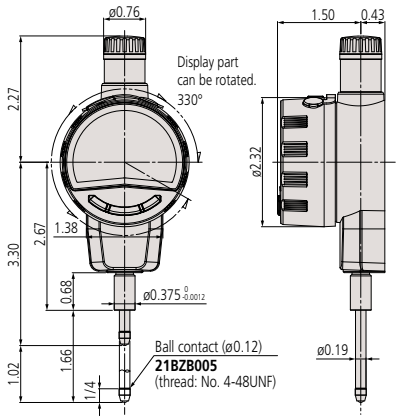

ISO / JIS Type

Unit: mm

543-855

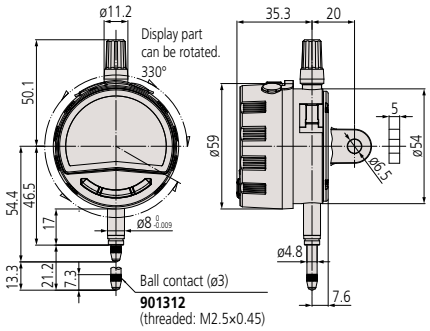

543-853, 543-857

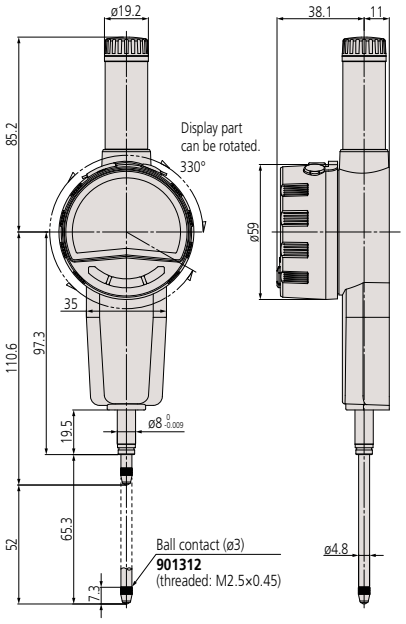

543-851

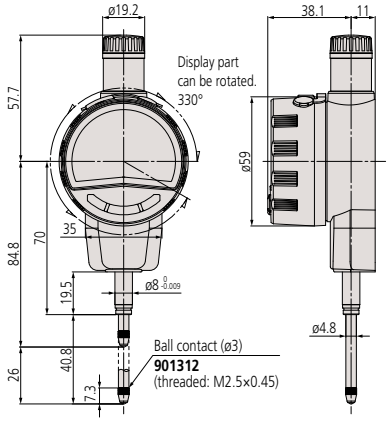

F

Mitutoyo

Indicators

ABSOLUTE Digimatic Indicator ID-CNX (Digimatic S1 supported) SERIES 543 — Standard Type

Measuring range 0.5 inch **543-702-02**

Measuring range 1 inch **543-722B-02**

- **ID-C** Series is a next-generation indicator with many new functions, supporting bidirectional communication. With the addition of the appropriate data cable and software, remote zero setting and gage setting can all be implemented from a connected PC, thereby improving your work efficiency.
- The digital display and analog bar indications help you to intuitively read the approach to the origin and tolerance values.
- The ABS (ABSOLUTE) scale restores the last origin position* automatically when the indicator is turned on, and realizes high reliability by eliminating over-speed errors.
- The next calibration due date can be set with an alarm to improve instrument management.
- Equipped with a data output port that enables incorporation into measurement networking and statistical process control systems. (Refer to the A section)

* Refer to "Precautions for use" on page F-2.

MeasurLink ENABLED Data Management Software by Mitutoyo

ABSOLUTE™

PROPRIETARY INSPECTION CERTIFICATE

DIGIMATIC S1

Functions

- Peak detection (MAX/MIN)
- Runout range measurement (MAX - MIN)
- Zero-setting (INC system)
- Presetting (ABS system)
- Measuring direction switching
- Tolerance judgment
- Resolution switching (For 0.0005 mm or 0.00002 inch resolution type)
- Simple calculation: f(x) =Ax
- Function Lock
- Calibration schedule warning
- Auto power OFF
- Data output
- Display value holding (when no external device is connected)
- 330° rotary display
- Low battery/voltage alarm display
- Error alarm display

Example of ID-CNX installed on optional bore gage

Note: Direction setting, etc. is necessary when **ID-CNX** is used with a bore gage. Refer to the operation manual for details.

Spindle orientation for measurement

- Standard models with measuring range 12.7 mm: Usable in all orientations.
- Models with measuring range 25.4 or 50.8 mm: Usable between the contact point pointing downward and spindle in horizontal orientation. To use the contact point pointing upward, the auxiliary spindle spring (optional) is required.
- Low measuring force model: See "Setting measuring force on low measuring force models" below.

Setting measuring force on low measuring force models

The measuring force of models with low measuring force can be set by combining standard accessory springs and weights.

• 543-715(B)/716(B)/717(B)

Spindle orientation	Spring	Weight (approximately 0.1 N)	Maximum measuring force (N)
Pointing vertically downward	Yes	Yes	0.5 or less
	Yes	No	0.4 or less
	No	Yes	0.3 or less
	No	No	0.2 or less
Horizontal	Yes	No	0.3 or less

Note: Operation using configurations other than shown above is not guaranteed.

• 543-705(B)/706(B)/707(B)

Spindle orientation	Spring	Weight (approximately 0.1 N)	Maximum measuring force (N)
Pointing vertically downward	Yes	Yes	0.7 or less
	Yes	No	0.6 or less
	No	Yes	0.4 or less
	No	No	Not guaranteed

Note: Operation using configurations other than shown above is not guaranteed.

SPECIFICATIONS

Inch/Metric ASME/ANSI/AGD: Type Ø3/8" stem, #4-48UNF thread

Order No. w/lug	Order No. Flat back	Range	Resolution	Accuracy (in)	Hysteresis	Repeatability	Measuring force (N)	Mass (g) w/lug	Mass (g) Flat back
543-702-02	**543-702B-02**	0.5 in/ 12.7 mm	0.00002/0.00005/ 0.0001/0.0005 in, 0.0005/0.001/ 0.01 mm (selectable)	±0.00012	0.00008	0.00008	1.5 or less	195	165
543-707-02*	**543-707B-02***						0.4 to 0.7	190	160
—	**543-722B-02**	1 in/25.4 mm					1.8 or less	—	195
—	**543-732B-02**	2 in/50.8 mm		±0.00020			2.3 or less	—	260
543-712-02	**543-712B-02**	0.5 in/ 12.7 mm	0.0005 in/0.01 mm	±0.0010	0.0010	0.0005	0.9 or less	190	160
543-717-02*	**543-717B-02***						0.2 to 0.5	185	155
—	**543-727B-02**	1 in/25.4 mm					1.8 or less	—	190
—	**543-737B-02**	2 in/50.8 mm		±0.0015			2.3 or less	—	245

Inch/Metric ISO/JIS Type: Ø8mm stem, M2.5x0.45 thread

Order No. w/lug	Order No. Flat back	Range	Resolution	Accuracy (mm)	Hysteresis H_{MPE}	Repeatability R_{MPE}	Measuring force (N)	Mass (g) w/lug	Mass (g) Flat back
543-701-02	**543-701B-02**	0.5 in/12.7 mm	0.00002/0.00005/ 0.0001/0.0005 in, 0.0005/0.001/ 0.01 mm (selectable)	0.003	0.002	0.002	1.5 or less	175	165
543-706-02*	**543-706B-02***						0.4 to 0.7	170	160
—	**543-721B-02**	1 in/25.4 mm					1.8 or less	—	195
—	**543-731B-02**	2 in/50.8 mm		0.005			2.3 or less	—	260
543-711-02	**543-711B-02**	0.5 in/12.7 mm	0.0005 in/ 0.01 mm	0.02	0.02	0.01	0.9 or less	170	160
543-716-02*	**543-716B-02***						0.2 to 0.5	165	155
—	**543-726B-02**	1 in/25.4 mm					1.8 or less	—	190
—	**543-736B-02**	2 in/50.8 mm		0.04			2.3 or less	—	245

Metric ISO/JIS Type: Ø8mm stem, M2.5x0.45 thread

Order No. w/lug	Order No. Flat back	Range (mm)	Resolution (mm)	Accuracy (mm)	Hysteresis H_{MPE}	Repeatability R_{MPE}	Measuring force (N)	Mass (g) w/lug	Mass (g) Flat back
543-700-02	**543-700B-02**	12.7	0.0005/ 0.001/0.01 (selectable)	0.003	0.002	0.002	1.5 or less	175	165
543-705-02*	**543-705B-02***						0.4 to 0.7	170	160
—	**543-720B-02**	25.4					1.8 or less	—	195
—	**543-730B-02**	50.8		0.005			2.3 or less	—	260
543-710-02	**543-710B-02**	12.7	0.01	0.02	0.02	0.01	0.9 or less	170	160
543-715-02*	**543-715B-02***						0.2 to 0.5	165	155
—	**543-725B-02**	25.4					1.8 or less	—	190
—	**543-735B-02**	50.8		0.04			2.3 or less	—	245

- Power source: CR2032 battery (1 pc.), **64PTS301** included as standard
- Battery life: Approx. 2,700 hours of continuous use. Approx. 2.5 years under normal use. (Depends on use of the indicator. The above values are reference values.)

* Low Measuring force.

Refer to the Indicators Brochure (**2340**) for more details.

Video

Optional Output Devices

Order No.	Description
Wired	
264-020	USB Input tool (**IT-020U**)
- 06AGL011	Connecting Cable (**1m**)
- 06AGL021	Connecting Cable (**2m**)
06AGQ001F	USB Input Tool Direct (**2m**)
Wireless	
264-622	Transmitter (**IP67**)
264-626	Transmitter (**IP67, Bluetooth**)
264-623	Transmitter (**Buzzer**)
264-627	Transmitter (**Buzzer, Bluetooth**)
- 02AZF700	Connecting Unit (**Adapter**)*1
- 02AZF670	Transmitter Mounting Bracket*2
- 02AZG011	Connecting Cable
- 02AZG021	Connecting Cable (**foot switch compatible**)

Note: Model uses connector type "SF"
*1 For 0.5" Models ONLY
*2 For use on 1" and 2" Models
For additional accessories refer to pages F-63 to F-74

Connecting unit fitted to an indicator (12.7 mm type)

Typical application of **U-WAVE-TM/TMB** mounting bracket (with **543-725B**)

- Lifting
  Lifting lever:
  21EZA198 (0.5 inch /12.7 mm type)
  Lifting cable:
  21JZA295 Stroke 12.7 mm: 0.5 inch /12.7 mm type
  (This cannot be used on low measuring force model.)
  With auto-stop function:
  21JZA301 (overall length 300 mm) 0.5 inch /12.7 mm type
  (This cannot be used on low measuring force model.)
  Lifting knob:
  21EZA105 (0.5 inch /12.7 mm type)
  (This cannot be used on low measuring force model.)
  21EZA197 (1 inch /25.4 mm type)
  21EZA200 (2 inch /50.8 mm type)
  Lifting lever: **21EAA426**
  (supplied with 25.4 mm and 50.8 mm models as standard.)
  903594 Pneumatic Lifting Attachment (0.5"/12.7mm models only)
- Auxiliary spindle spring:
  02ACA571 (1 inch /25.4 mm type*)
  02ACA773 (2 inch /50.8 mm type*)
  *Required when orienting the indicator upside down.
- Measurement data collection software
  USB-ITPAK V3.0: **06AGR543**
- Contact points for Mitutoyo's Digimatic indicators (optional)
  Refer to pages F-63 to F-68 for details.
- Interchangeable back covers (optional)
  Refer to pages F-69 to F-70 for details.
- Measuring stands (optional)
  Refer to pages F-97 to F-103 for details.

DIMENSIONS

12.7 mm range models

Unit: mm

ISO/JIS Type

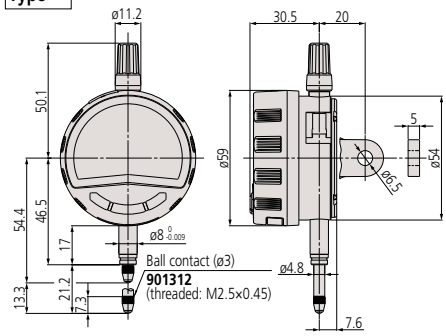

Unit: in

ASME/ANSI/AGD Type

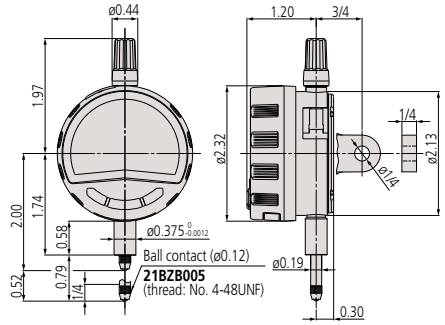

25.4 mm range models

Unit: mm

ISO/JIS Type

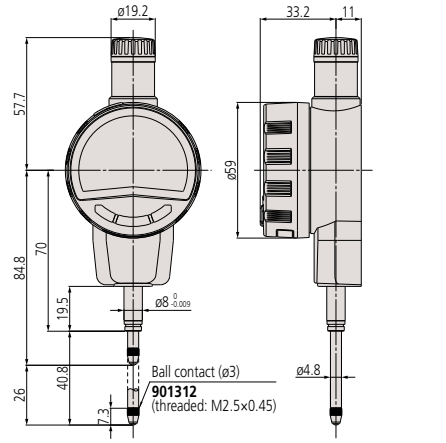

Unit: in

ASME/ANSI/AGD Type

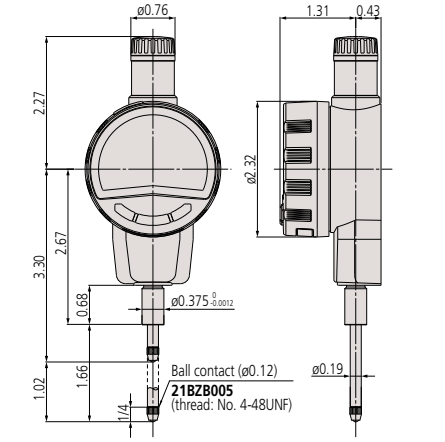

50.8 mm range models

Unit: mm

ISO/JIS Type

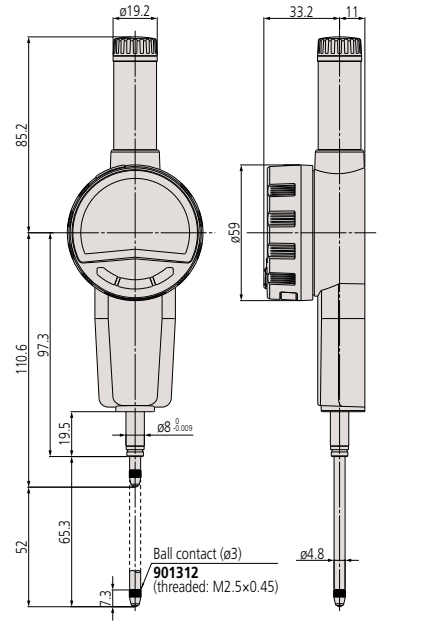

Unit: in

ASME/ANSI/AGD Type

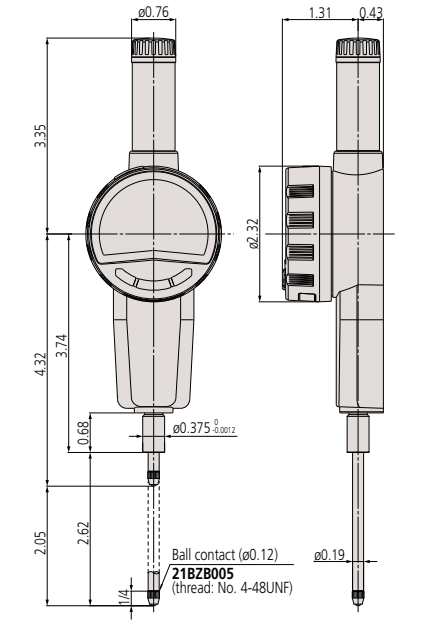

Note: Products with a Order No. suffixed "**B**" have a plain back, and other models have a center-lug back. Refer to pages F-69 to F-70 for details of the backs.

F

Mitutoyo

Indicators

ABSOLUTE Digimatic Indicator ID-N/B SERIES 543 — with Dust/Water Protection Conforming to IP66

- Slim body design (body width: only 35 mm). Rated to IP66: Can be used confidently even in adverse environments.
- The ABS (ABSOLUTE) scale restores the last origin position* automatically when the indicator is turned on, and realizes high reliability by eliminating over-speed errors.
- Back plunger design (ID-B) is widely used for dial indicators. A 5 mm-stroke plunger with a higher degree of accuracy has been implemented by adopting a direct reading scale for plunger displacement.
- Tolerance judgment can be performed by setting upper and lower tolerance limits.
- Equipped with a data output port that enables incorporation into measurement networking and statistical process control systems. (Refer to the A section)

* Refer to "Precautions for use" on page F-2.

543-576

Slim type ID-N

543-586

Back Plunger type ID-B

SPECIFICATIONS

Inch/Metric ASME/ANSI/AGD: Type Ø3/8" stem, #4-48UNF thread

Order No.	Range (in)	Resolution	Accuracy (in)	Hysteresis	Repeatability	Measuring force (N)	Remarks
543-571	0.5	0.0005 in/ 0.01 mm	±0.0010	0.0010	0.0005	2.5 or less	Slim type
543-581	0.2					2.0 or less	Back Plunger type
543-576	0.5	0.00005/ 0.0005 in, 0.001/ 0.01 mm (selectable)	±0.00010	0.00010	0.00010	2.5 or less	Slim type
543-586	0.2					2.0 or less	Back Plunger type

Metric ISO/JIS Type: Ø8mm stem, M2.5x0.45 thread

Order No.	Range (mm)	Resolution (mm)	Accuracy (mm)	Hysteresis H_{MPE}	Repeatability R_{MPE}	Measuring force (N)	Remarks
543-570	12.7	0.01	0.02	0.02	0.01	2.5 or less	Slim type
543-580	5.08					2.0 or less	Back Plunger type
543-575	12.7	0.001/0.01 (selectable)	0.003/0.01	0.002	0.002	2.5 or less	Slim type
543-585	5.08					2.0 or less	Back Plunger type

- Power source: SR44 battery (1 pc.), **938882** included as standard

Bifurcated connection cable with zero-setting terminal (optional)

21EAA210 (1 m), **21EAA211** (2 m)
Two of the wires inside the cable are separated for zero setting without touching the SET switch on the main body. Use these wires in combination with commercially available switches. Zero setting is performed by briefly connecting these two wires together (less than a second), and ABS preset & recall by connecting for a second or more.

SPC cable

Bifurcated connection cable with zero-setting terminal

MeasurLink ENABLED ABSOLUTE™
Data Management Software by Mitutoyo

IP66

Applicable models: **543-57X**

Applicable models: **543-58X**

Typical application

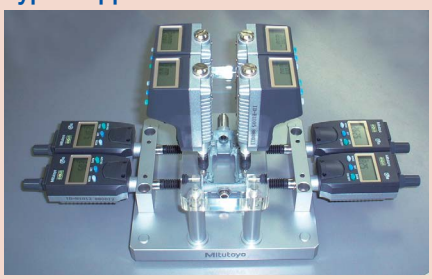

Functions

- Zero-setting (INC system)
- Presetting (ABS system)
- Measuring direction switching
- Tolerance judgment
- Display readout reversal
- Resolution switching (For 0.001 mm or 0.00005 in resolution type)
- Data output
- Display value holding (when no external device is connected)
- Low battery voltage alarm display
- Error alarm display

Optional Output Devices

Order No.	Description
Wired	
264-020	USB Input tool (**IT-020U**)
- 21EAA194	Connecting Cable (**1m**)
- 21EAA190	Connecting Cable (**2m**)
06AFM380G	USB Input Tool Direct (**2m**)
Wireless	
264-622	Transmitter (**IP67**)
264-626	Transmitter (**IP67, Bluetooth**)
264-623	Transmitter (**Buzzer**)
264-627	Transmitter (**Buzzer, Bluetooth**)
- 02AZF675	Transmitter Mounting Bracket*[1]
- 02AZD790G	Connecting Cable
- 02AZE140G	Connecting Cable (**foot switch compatible**)

Note: Model uses connector type "G"
*[1] Compatible for ID-N Models ONLY
For additional accessories refer to pages F-63 to F-74

Typical application

Rated to IP66 water-and dust-proofing standard, and oil resistance improved.

Optional Accessories

- Lug
  21EZA145 (ISO/JIS type)
  21EZA146 (ASME/ANSI/AGD type)
- Contact points for Mitutoyo's Digimatic indicators (optional)
  Refer to pages F-63 to F-68 for details.
- Lifting knob (only for **ID-N**)
  21EZA105 (ISO/JIS type)
  21EZA150 (ASME/ANSI/AGD type)
  Spindle can be manually lifted. Remove the spindle cap for **ID-N** and attach the lifting knob to the spindle. Note that water resistance is not maintained in this configuration.

Typical application using the lifting knob

- Rubber boot
  For oil resistance (NBR) **21EAA423** (for **ID-N**)
  21AAB562 (for **ID-B**)
  For durability (silicone) **238774** (for **ID-N**)
  21EAA212 (for **ID-B**)

DIMENSIONS

Slim Type
ID-N

Unit: mm

Unit: in

ISO/JIS Type

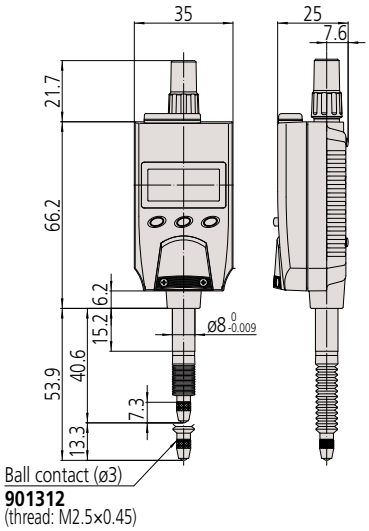

ASME/ANSI/AGD Type

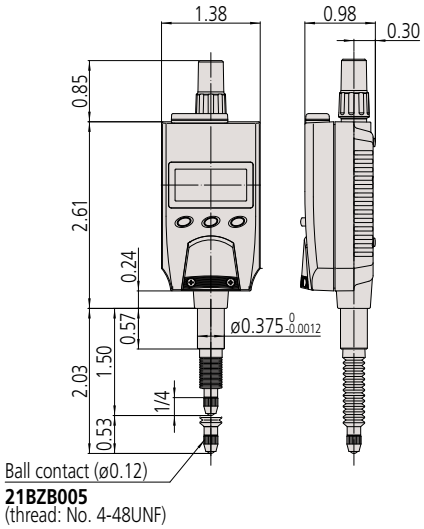

Back plunger Type
ID-B

ISO/JIS Type

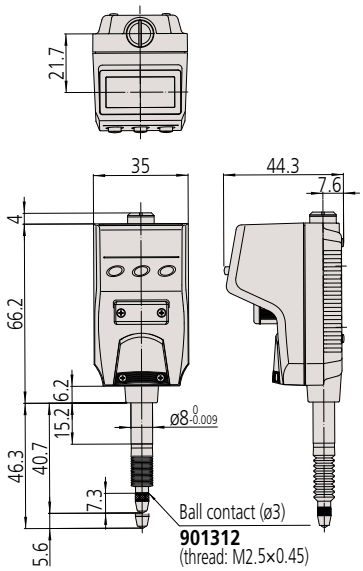

ASME/ANSI/AGD Type

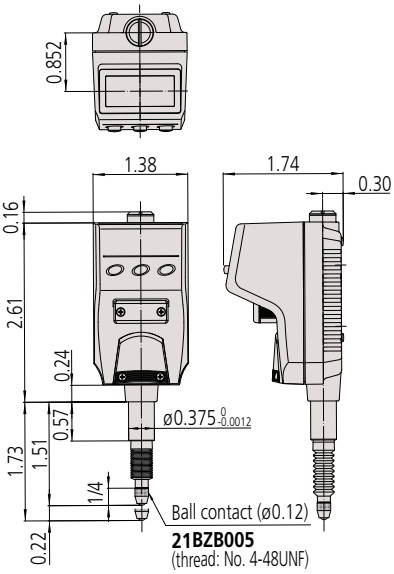

F

Indicators

ABSOLUTE Digimatic Indicator ID-SX2 SERIES 543

- A standard model of indicator that is reliable and easy to use with basic functions.
- This model consumes less power than other advanced models and can operate longer without frequent battery replacement.
- The ABS (ABSOLUTE) scale restores the last origin position* automatically when the indicator is turned on, and realizes high reliability by eliminating over-speed errors.
- Equipped with a data output port that enables incorporation into measurement networking and statistical process control systems. (Refer to the A section)

* Refer to "Precautions for use" on page F-2.

543-792-12

SPECIFICATIONS

Inch / Metric ASME/ANSI/AGD Type: Ø3/8" stem, #4-48UNF thread

Order No.	Range	Resolution	Accuracy (in)	Hysteresis	Repeatability	Measuring force (N)	Back type	Mass (g)	Dust/Water protection level
543-792-12	0.5 in/ 12.7 mm	0.00005 in/ 0.001 mm	±0.00010	0.00010	0.00010	1.5 or less	With lug	165	IP42
543-792B-12							Flat	140	
543-793-12		0.0001 in/ 0.001 mm					With lug	165	
543-793B-12							Flat	140	
543-796-12		0.00005 in/ 0.001 mm				2.5 or less	With lug	155	IP53
543-796B-10							Flat	155	
543-783-12		0.0005 in/ 0.01 mm	±0.0010	0.0010	0.0005	1.5 or less	With lug	165	IP42
543-783B-12							Flat	140	

Inch / Metric ISO/JIS Type: Ø8mm stem, M2.5x0.45 thread

Order No.	Range	Resolution	Accuracy (mm)	Hysteresis H_{MPE}	Repeatability R_{MPE}	Measuring force (N)	Back type	Mass (g)	Dust/Water protection level
543-791-12	0.5 in/ 12.7 mm	0.00005 in/ 0.001 mm	0.003	0.002	0.002	1.5 or less	With lug	150	IP42
543-791B-12							Flat	140	
543-795-10						2.5 or less	With lug	155	IP53
543-795B-12							Flat	155	
543-782-12		0.0005 in/ 0.01 mm	0.02	0.02	0.01	1.5 or less	With lug	150	IP42
543-782B-12							Flat	140	

Metric ISO/JIS Type: Ø8mm stem, M2.5x0.45 thread

Order No.	Range (mm)	Resolution (mm)	Accuracy (mm)*1	Hysteresis H_{MPE}	Repeatability R_{MPE}	Measuring force (N)	Back type	Mass (g)	Dust/ Water protection level
543-790-12	12.7	0.001	0.003	0.002	0.002	1.5 or less	With lug	150	IP42
543-790B-12							Flat	140	
543-794-12						2.5 or less	With lug	155	IP53
543-794B-12							Flat	155	
543-781-12		0.01	0.02	0.02	0.01	1.5 or less	With lug	150	IP42
543-781B-10							Flat	140	

- Power source: SR44 battery (1 pc.), **938882** included as standard
- Battery Life: Approx. 5 years under normal use

MeasurLink ENABLED
Data Management Software by Mitutoyo

ABSOLUTE™

IP53

Applicable models:
See **SPECIFICATIONS**

Functions

- Origin set (Zero-setting)
- Measuring direction switching
- Data output
- Low battery voltage alarm display
- Error alarm display

Optional Output Devices

Order No.	Description
Wired	
264-020	USB Input tool (**IT-020U**)
- 905338	Connecting Cable (**1m**)
- 905409	Connecting Cable (**2m**)
06AFM380F	USB Input Tool Direct (**2m**)
Wireless	
264-622	Transmitter (**IP67**)
264-626	Transmitter (**IP67, Bluetooth**)
264-623	Transmitter (**Buzzer**)
264-627	Transmitter (**Buzzer, Bluetooth**)
- 02AZF670	Transmitter Mounting Bracket
- 02AZD790F	Connecting Cable
- 02AZE140F	Connecting Cable (**foot switch compatible**)

Note: Model uses connector type "F"
For additional accessories refer to pages F-63 to F-74

- Lifting
  Lifting lever **21EZA198**
  Lifting knob **21EZA105**
  Lifting cable **21JZA295**
  With auto-stop function:
  21JZA301 (overall length 300 mm)
  903594 Pneumatic Lifting Attachment (0.5"/12.7mm models only)
- Contact points for Mitutoyo's Digimatic indicators (optional)
  Refer to pages F-63 to F-68 for details.
- Interchangeable back covers (optional)
  Refer to pages F-69 to F-70 for details.
- Measuring stands (optional)
  Refer to Section A for details.

F

DIMENSIONS

ASME / ANSI / AGD Type

Unit: in

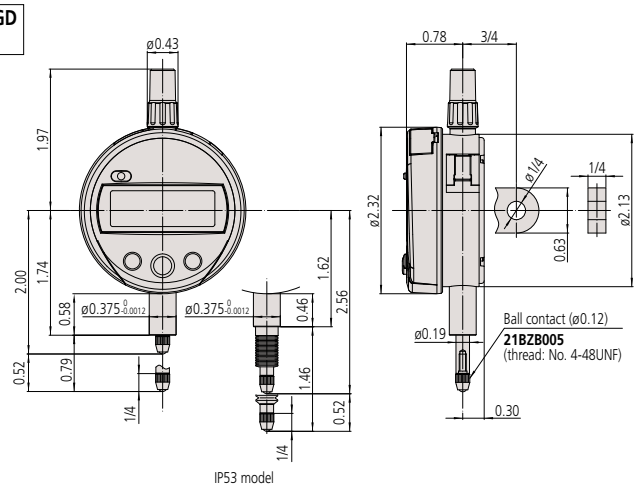

ISO / JIS Type

Unit: mm

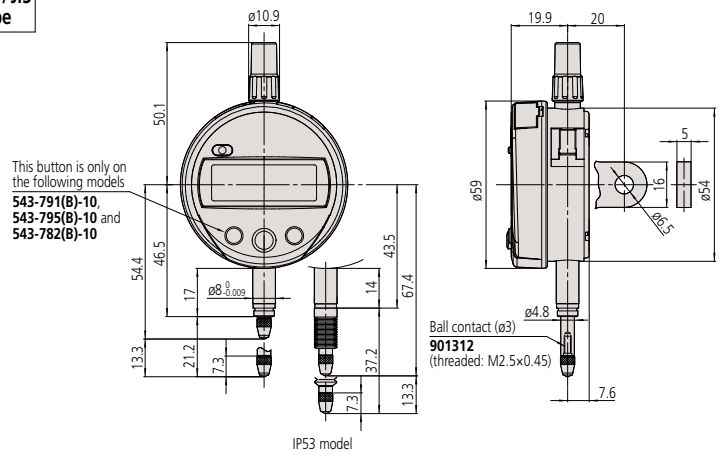

F

Got Questions?

Indicators

ABSOLUTE Digimatic Indicator ID-U SERIES 575 — Slim and Economical Design

- Cost-effective and user-friendly type with basic functions.
- Battery life: Approx. 5 years under normal use.
- The ABS (ABSOLUTE) scale restores the last origin position* automatically when the indicator is turned on, and realizes high reliability by eliminating over-speed errors.
- Equipped with a data output port that enables incorporation into measurement networking and statistical process control systems. (Refer to the A section)

* Refer to "Precautions for use" on page F-2.

575-123

SPECIFICATIONS

Inch / Metric ASME/ANSI/AGD: Type Ø3/8" stem, #4-48UNF thread

Order No.	Range	Resolution	Accuracy (in)	Hysteresis	Repeatability	Measuring force (N)
575-123	1 in/ 25.4 mm	0.0005 in/ 0.01 mm	±0.0010	0.0010	0.0005	1.8 or less

Inch / Metric ISO/JIS Type: Ø8mm stem, M2.5x0.45 thread

Order No.	Range	Resolution	Accuracy (mm)	Hysteresis H_{MPE}	Repeatability R_{MPE}	Measuring force (N)
575-122	1 in/ 25.4 mm	0.0005 in/ 0.01 mm	0.02	0.02	0.01	1.8 or less

Metric ISO/JIS Type: Ø8mm stem, M2.5x0.45 thread

Order No.	Range (mm)	Resolution (mm)	Accuracy (mm)	Hysteresis H_{MPE}	Repeatability R_{MPE}	Measuring force (N)
575-121	25.4	0.01	0.02	0.02	0.01	1.8 or less

- Power source: SR44 battery (1 pc.), **938882** included as standard
- Approx. 5 years under normal use

MeasurLink ENABLED
Data Management Software by Mitutoyo

ABSOLUTE™

PROPRIETARY INSPECTION CERTIFICATE

Function

- Origin set (Zero-setting)
- Measuring direction switching
- Data output
- Low battery voltage alarm display
- Error alarm display

Optional Output Devices

Order No.	Description
Wired	
264-020	USB Input tool (**IT-020U**)
- 905338	Connecting Cable (**1m**)
- 905409	Connecting Cable (**2m**)
06AFM380F	USB Input Tool Direct (**2m**)
Wireless	
264-620	Transmitter (**IP67**)
264-624	Transmitter (**IP67, Bluetooth**)
264-621	Transmitter (**Buzzer**)
264-625	Transmitter (**Buzzer, Bluetooth**)
- 02AZD790F	Connecting Cable
- 02AZE140F	Connecting Cable (**foot switch compatible**)

Note: Model uses connector type "F"
For additional accessories refer to pages F-63 to F-74

- Spindle lifting cable (stroke: 10 mm): **21JZA295**
- With auto-stop function: **21JZA301** (overall length 300 mm)
- Contact points for Mitutoyo's Digimatic indicators (optional)
  Refer to pages F-63 to F-68 for details.
- Measuring stands (optional)
  Refer to pages F-97 to F-103 for details.

Talk to Sales

F

DIMENSIONS

ASME / ANSI / AGD Type

Unit: in

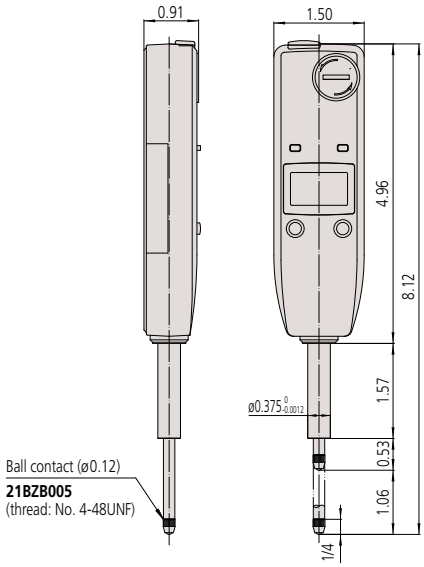

ISO / JIS Type

Unit: mm

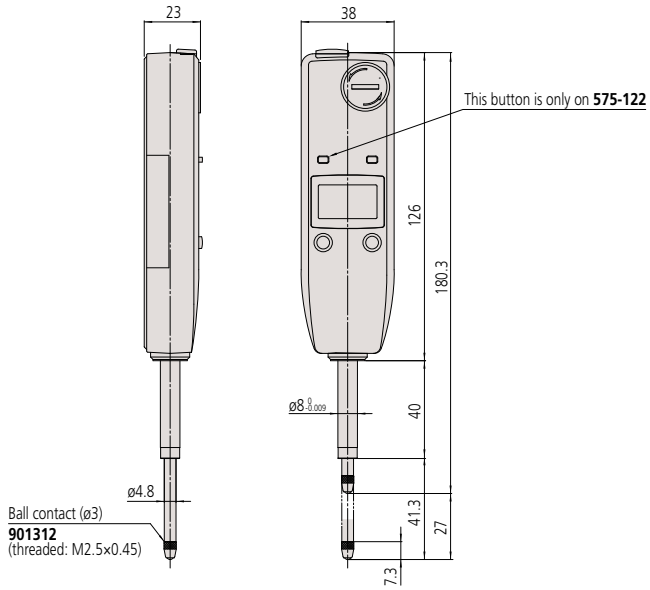

F

Indicators

ABSOLUTE Digimatic Indicator ID-CAX SERIES 543 — Peak-Value Hold Type

- The Peak Hold-Type Digimatic Indicator. GO/NG judgment is performed by setting the upper and lower tolerances for max., min. and runout values.*1
- Five buttons, status icons, and clear button indications allow easy operation and various functions.
- Wide display and new analog bar graph are standard on all models.
- The ABS (ABSOLUTE) scale restores the last origin position*2 automatically when the indicator is turned on, and realizes high reliability by eliminating over-speed errors.
- Equipped with a data output port that enables incorporation into measurement networking and statistical process control systems. (Refer to the A section)
- By using the parameter setup kit (optional) and the dedicated software, the functions and the parameters can be configured using a computer.

*1 Tolerance judgment results cannot be output.
*2 Refer to "Precautions for use" on page F-2.

543-302-10

F

SPECIFICATIONS

Inch / Metric ASME/ANSI/AGD: Type Ø3/8" stem, #4-48UNF thread

Order No.	Range	Resolution	Accuracy (in)	Hysteresis	Repeatability	Measuring force (N)	Mass (g)
543-302-10	0.5 in/ 12.7 mm	0.00005/ 0.0001/ 0.0005 in, 0.001/ 0.01 mm (selectable)	±0.00010	0.00010	0.00010	1.5 or less	195
543-302B-10 (flat back)							170

Inch / Metric ISO/JIS Type: Ø8mm stem, M2.5x0.45 thread

Order No.	Range	Resolution	Accuracy (mm)	Hysteresis H_{MPE}	Repeatability R_{MPE}	Measuring force (N)	Mass (g)
543-301-10	0.5 in/ 12.7 mm	0.00005/ 0.0001/ 0.0005 in, 0.001/ 0.01 mm (selectable)	0.003	0.003	0.002	1.5 or less	180
543-301B-10 (flat back)							170

Metric ISO/JIS Type: Ø8mm stem, M2.5x0.45 thread

Order No.	Range (mm)	Resolution (mm)	Accuracy (mm)	Hysteresis H_{MPE}	Repeatability R_{MPE}	Measuring force (N)	Mass (g)
543-300-10	12.7	0.001/0.01 (selectable)	0.003	0.003	0.002	1.5 or less	180
543-300B-10 (flat back)							170

- Power source: CR2032 battery (1 pc.), **64PTS301** included as standard
- Battery Life: Approx. 5 years under normal use

MeasurLink ENABLED
Data Management Software by Mitutoyo

ABSOLUTE™

PROPRIETARY INSPECTION CERTIFICATE

Functions

- Peak detection (MAX/MIN)
- Runout (MAX - MIN) Hold

Note: Peak detection
1) Sampling rate: 50 readings/s
2) Capturing speed: 50 µm/s (max.)

- Zeroset (INC system)
- Preset function (ABS system)
- Measuring direction switching
- Tolerance judgment (3 pairs of ABS, INC memory function)
- Resolution selection
- Simple calculation f(x) =Ax
- Analog bar resolution selection
- Key lock
- in/mm conversion (inch/mm type)
- Display hold (when no external device is connected)
- Data output
- External PC setting input
- Display rotation (330°)
- Low battery voltage alarm display
- Error alarm display

Optional Output Devices

Order No.	Description
Wired	
264-020	USB Input tool (**IT-020U**)
- 905338	Connecting Cable (**1m**)
- 905409	Connecting Cable (**2m**)
06AFM380D	USB Input Tool Direct (**2m**)
Wireless	
264-622	Transmitter (**IP67**)
264-626	Transmitter (**IP67, Bluetooth**)
264-623	Transmitter (**Buzzer**)
264-627	Transmitter (**Buzzer, Bluetooth**)
- 02AZF670	Transmitter Mounting Bracket
- 02AZD790F	Connecting Cable
- 02AZE140F	Connecting Cable (**foot switch compatible**)

Note: Model uses connector type "F"
For additional accessories refer to pages F-63 to F-74

- Lifting
  Lifting lever **21EZA198**
  Lifting knob **21EZA105**
  903594 Pneumatic Lifting Attachment (0.5"/12.7mm models only)
- Parameter setup kit: **21EZA313**

Note: Parameter setting software (can be downloaded for free from the Mitutoyo website) is also required.

Parameter setup kit

Parameter setting software

- Contact points for Mitutoyo's Digimatic indicators (optional)
  Refer to pages F-63 to F-68 for details.
- Interchangeable back covers (optional)
  Refer to pages F-69 to F-70 for details.
- Measuring stands (optional)
  Refer to pages F-97 to F-103 for details.

DIMENSIONS

ASME / ANSI / AGD Type

Unit: in

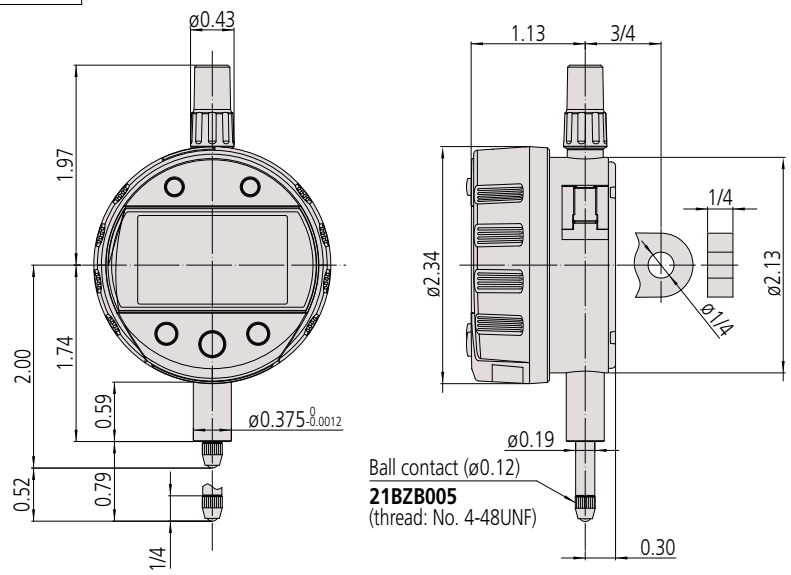

ISO / JIS Type

Unit: mm

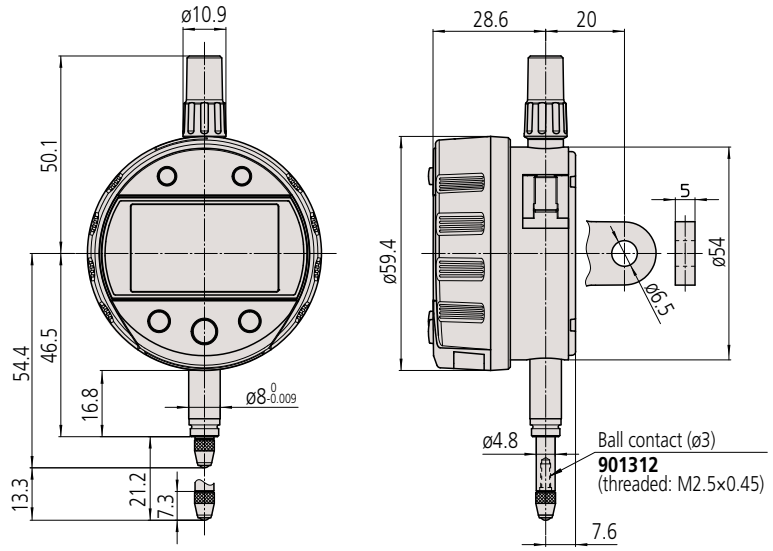

F

Need Repair?

Indicators

ABSOLUTE Digimatic Indicator ID-CGX SERIES 543 — Bore Gage Type

- Dedicated to inside diameter measurement with minimum-value holding and tolerance judgment functions*.
  Use together with a Mitutoyo bore gage (refer to pages C-31 to C-48 for details).
- Five buttons, status icons, and clear button indications allow easy operation and various functions.
- Wide display and analog bar graph are standard on all models.
- Up to three sets of master values and upper/lower tolerance values can be stored to simplify the master setting.
- By using the parameter setup kit (optional) and the dedicated software, the functions and the parameters can be configured using a computer.

* Tolerance judgment results cannot be output.

543-312B-10

F

SPECIFICATIONS

Inch/Metric ASME/ANSI/AGD: Type Ø3/8" stem, #4-48UNF thread

Order No.	Range	Resolution	Accuracy (in)	Hysteresis	Repeatability	Measuring force (N)	Mass (g)
543-312B-10	0.5 in/ 12.7 mm	0.00005/ 0.0001/ 0.0005 in, 0.001/ 0.01 mm (selectable)	±0.00010	0.00010	0.00010	1.5 or less	170

Inch/Metric ISO/JIS Type: Ø8mm stem, M2.5x0.45 thread

Order No.	Range	Resolution	Accuracy (mm)	Hysteresis H_{MPE}	Repeatability R_{MPE}	Measuring force (N)	Mass (g)
543-311B-10	0.5 in/ 12.7 mm	0.00005/ 0.0001/ 0.0005 in, 0.001/ 0.01 mm (selectable)	0.003	0.003	0.002	1.5 or less	170

Metric ISO/JIS Type: Ø8mm stem, M2.5x0.45 thread

Order No.	Range (mm)	Resolution (mm)	Accuracy (mm)	Hysteresis H_{MPE}	Repeatability R_{MPE}	Measuring force (N)	Mass (g)
543-310B-10	12.7	0.001/0.01 (selectable)	0.003	0.003	0.002	1.5 or less	170

- Power source: CR2032 battery (1 pc.), **64PTS301** included as standard
- Battery Life: Approx. 5 years under normal use

MeasurLink ENABLED
Data Management Software by Mitutoyo

ABSOLUTE™

Example of use with a bore gage (sold separately)

Functions

- Minimum value detection

Note: Peak detection
  1) Sampling rate: 50 readings/s
  2) Capturing speed: 50 µm/s (max.)

- Preset (3 Preset values can be stored)
- Tolerance judgment
  (3 sets of upper and lower limits can be stored)
- Resolution selection
- Analog bar resolution selection
- Key lock
- Display hold (when no external device is connected)
- Data saving/calling
  (when no external device is connected)
- Data output
- External PC setting input
- Display rotation (330°)
- Low battery voltage alarm display
- Error alarm display

Optional Accessories

Refer to page F-13.

- Parameter setup kit (optional)
  Refer to page F-13 for details.

The ABSOLUTE Digimatic Bore Gage

ABSOLUTE Digimatic Bore Gages, which integrate the display with a bore gage measuring unit, are also available. Refer to pages C-49 and C-50 for details.

DIMENSIONS

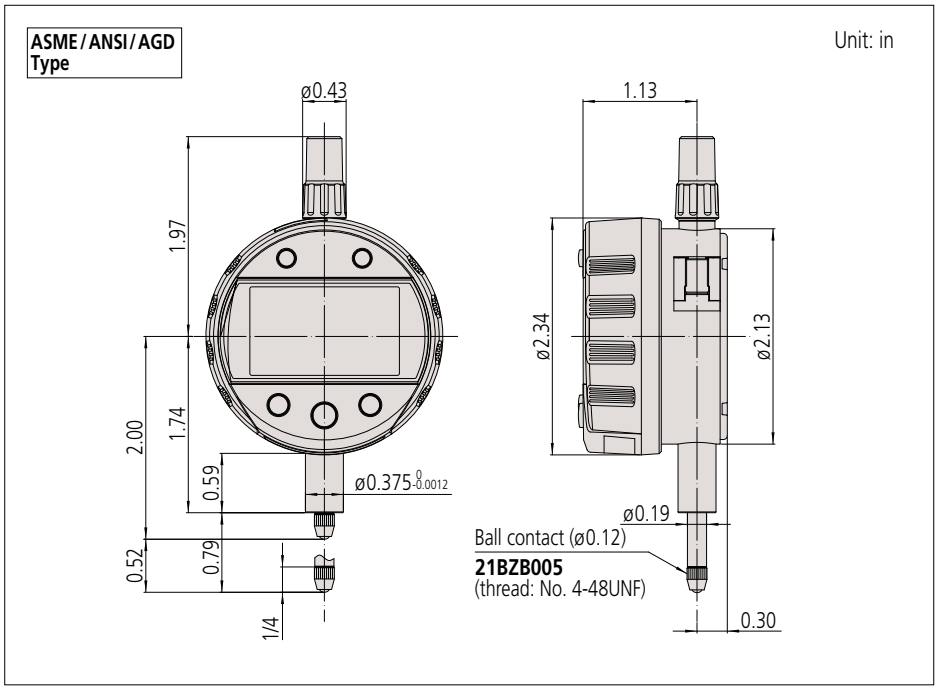

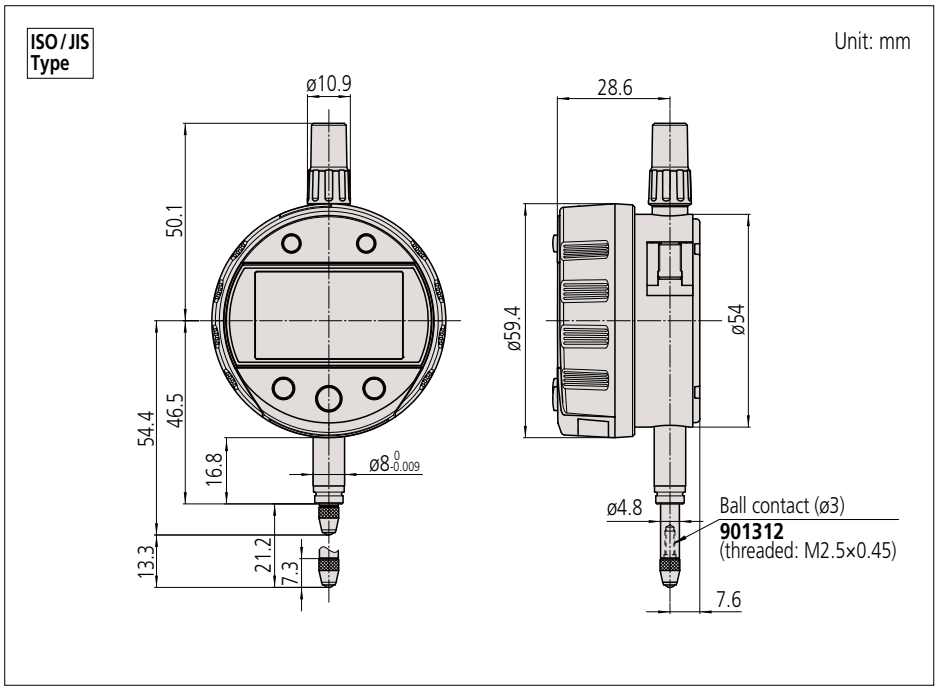

Where to Buy

F

Indicators

ABSOLUTE Digimatic Indicator ID-CRX SERIES 543 — Calculation Type

- This expandable indicator incorporates an internal calculation function that operates from plunger displacement. Using dedicated fixtures and setting the calculation coefficients, you can read your measurements directly without the need for conversions.
- By using the parameter setup kit (optional) and the dedicated software, the functions and the parameters can be configured using a computer.
- Five buttons, status icons, and clear button indications allow easy operation and various functions.

543-342B-10

F

SPECIFICATIONS

Inch / Metric ASME/ANSI/AGD: Type Ø3/8" stem, #4-48UNF thread

Order No.	Range	Resolution (selectable)	Accuracy (in)	Hysteresis	Repeatability	Measuring force (N)	Mass (g)
543-342B-10	0.5 in/ 12.7 mm	12 steps	±0.00010	0.00010	0.00010	1.5 or less	170
543-592B-10	1 in/ 25.4 mm					1.8 or less	190
543-597B-10	2 in/ 50.8 mm		±0.00025			2.3 or less	260

Inch / Metric ISO/JIS Type: Ø8mm stem, M2.5x0.45 thread

Order No.	Range	Resolution (selectable)	Accuracy (mm)	Hysteresis H_{MPE}	Repeatability R_{MPE}	Measuring force (N)	Mass (g)
543-341B-10	0.5 in/ 12.7 mm	12 steps	0.003	0.003	0.002	1.5 or less	170
543-591B-10	1 in/ 25.4 mm					1.8 or less	190
543-596B-10	2 in/ 50.8 mm		0.006			2.3 or less	260

Metric ISO/JIS Type: Ø8mm stem, M2.5x0.45 thread

Order No.	Range (mm)	Resolution (selectable)	Accuracy (mm)	Hysteresis H_{MPE}	Repeatability R_{MPE}	Measuring force (N)	Mass (g)
543-340B-10	12.7	12 steps	0.003	0.003	0.002	1.5 or less	170
543-590B-10	25.4					1.8 or less	190
543-595B-10	50.8		0.006			2.3 or less	260

- Power source: CR2032 battery (1 pc.), **64PTS301** included as standard
- Battery Life: Approx. 5 years under normal use

MeasurLink ENABLED
Data Management Software by Mitutoyo

ABSOLUTE™

PROPRIETARY INSPECTION CERTIFICATE

Typical application

Functions

- Calculation f (x') =Ax'+B+Cx'$^{-1}$
  (x'=x+offset)
- Peak detection (MAX/MIN)
- Runout (MAX - MIN) Hold

Note: Peak detection
1) Sampling rate: 10 readings/s
2) Capturing speed: 10 µm/s (max.)

Settings can be changed to:
1) Sampling rate: 50 readings/s
2) Capturing speed: 50 µm/s (max.)

- Zero-setting (INC system)
- Preset (ABS system)
- Tolerance judgment
  (3 pairs of ABS, INC memory function)
- Analog bar resolution selectable
- Key lock
- Display hold (when no external device is connected)
- Data output
- External PC setting input
- Display rotation (330°)
- Low battery voltage alarm display
- Error alarm display
- Resolution switching*

Resolution (mm)		
0.0002	0.005	0.1
0.0005	0.01	0.2
0.001	0.02	0.5
0.002	0.05	1

Resolution (in)		
0.00001	0.0002	0.005
0.00002	0.0005	0.01
0.00005	0.001	0.02
0.0001	0.002	0.05

* Since the calculation resolution is one micrometer (0.001 mm), using sub-micrometer resolution settings may result in the 4th-place digit being unreliable, particularly when B is set to a very low value and C=0. It does not change at all with certain combinations of calculation coefficient (for example, A=1, B=C=0). The 3rd-place digit representing micrometers (if displayed) is always reliable.

Optional Accessories

Refer to page F-13.

- Lifting
  Lifting lever **21EZA198** (0.5 inch /12.7 mm type)
  Lifting knob **21EZA105** (0.5 inch /12.7 mm type)
  21EZA197 (1 inch /25.4 mm type)
  21EZA200 (2 inch /50.8 mm type)
  903594 Pneumatic Lifting Attachment (0.5"/12.7mm models only)
- Parameter setup kit (optional)
  Refer to page F-13 for details.

DIMENSIONS

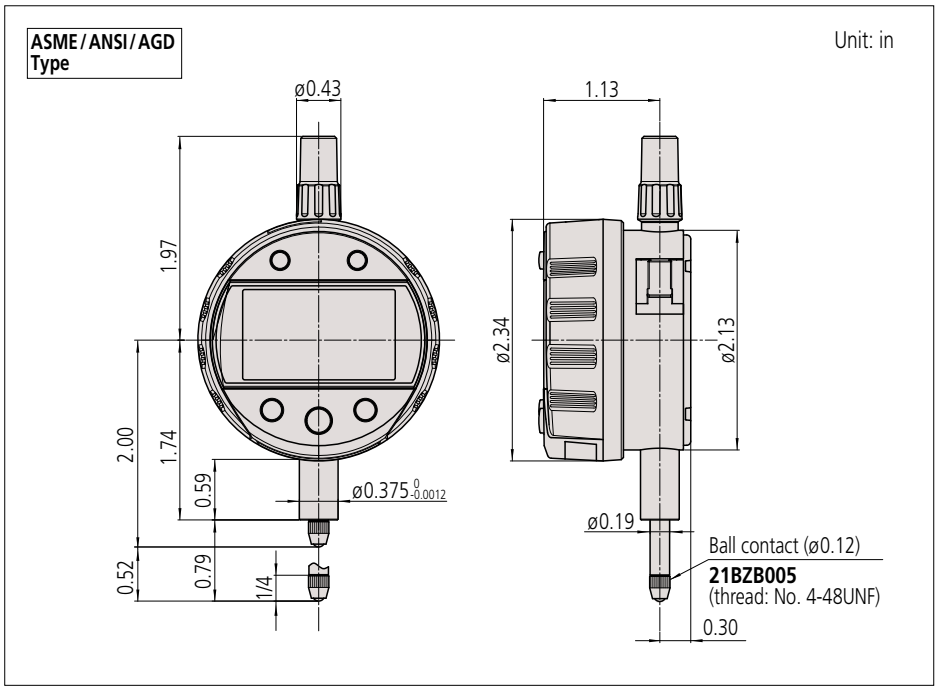

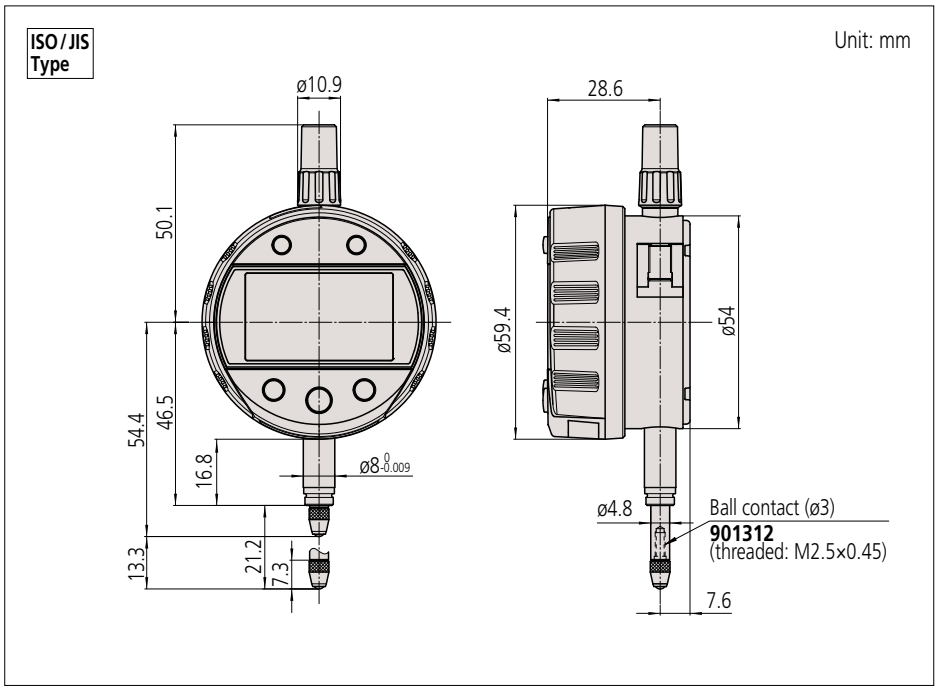

Get a Quote

Indicators

Examples of measuring various features

Item		D=Countersink diameter/Groove width; H=Countersink depth/Groove depth			
Fixture type*1					
Contact point		Cone	Ball		Cone
Measuring method x: Spindle displacement		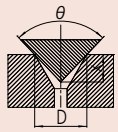	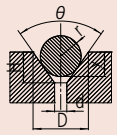		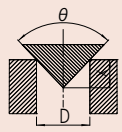
Calculation		D=Ax	D=Ax+B	H=Ax+B	D=Ax
Coefficient values	A	$-2tan\frac{\theta}{2}$	$-2tan\frac{\theta}{2}$	-1	$-2tan\frac{\theta}{2}$
	B	0	$2r\left(\frac{1}{\cos\frac{\theta}{2}}-tan\frac{\theta}{2}\right)$	$r\left(\frac{1}{\sin\frac{\theta}{2}}-1\right)-\frac{d}{2tan\frac{\theta}{2}}$	0
	C	0	0	0	0
Origin offset value (function ON/OFF)	d	0 (OFF)	0 (OFF)	0 (OFF)	0 (OFF)
ORIGIN-set position (x=0 position)		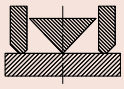			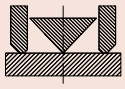
Displayed measurement value at ORIGIN-set position (Value displayed when x=0)		0	Value of coefficient B	0	0

Item		R=Outside radius of round object		R=Inside radius of round object	R=Outside radius of round object
Fixture type*1		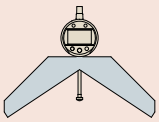	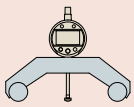		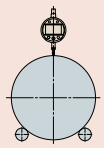
Contact point		—			
Measuring method x: Spindle displacement		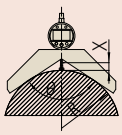	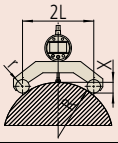	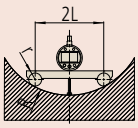	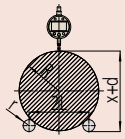
Calculation		R=Ax	R=Ax+B+Cx^{-1}		R=A(x+d)+B+C(x+d)$^{-1}$
Coefficient values	A	$-\frac{sin\frac{\theta}{2}}{1-sin\frac{\theta}{2}}$	$\frac{1}{2}$	$-\frac{1}{2}$	$\frac{1}{2}$
	B	0	$-r$	r	$-r$
	C	0	$\frac{L^2}{2}$	$-\frac{L^2}{2}$	$\frac{L^2}{2}$
Origin offset value (function ON/OFF)	d	0 (OFF)	0 (OFF)	0 (OFF)	d (ON)
ORIGIN-set position (x=0 position)		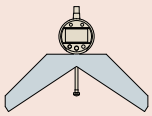	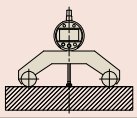		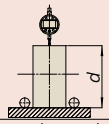
Displayed measurement value at ORIGIN-set position (Value displayed when x=0)		0	Err 30*2 (Overflow error of Display value)		Depends on value of d

*1 A dedicated fixture for a workpiece can be made to order.
*2 The error is cleared when the measured value returns to the displayable range as a result of moving the spindle.

Custom fixture examples

Need Support?

F

ABSOLUTE™

IP54

ABSOLUTE Digimatic Indicator ID-CJX
SERIES 543 — Signal Output Function Type

- Powered by external devices / machines. See optional accessories for Mitutoyo power supply options.
- Enables the Go/No-go judgment result to be output to external equipment. Output is enabled by directly connecting to an external device such as a sequencer, contributing to automation of measurement processes. It also supports logical invert of signal output.
- The Go/No-go judgment result is also indicated by the green/red LED and the signs on display.
- A peak detection function is equipped for measuring and judging peak values such as MAX, MIN, or Runout.
- The ABS (ABSOLUTE) scale restores the last origin position* automatically when the indicator is turned on, and realizes high reliability by eliminating over-speed errors.

* Refer to "Precautions for use" on page F-2.

543-350-10

Functions

- Signal output (–NG/OK/+NG, N-ch open drain, logical invert is available)
- Remote control (peak start preset/zero-set)
- Peak detection (MAX/MIN)
- Runout range measurement (MAX - MIN)
- Zero-setting (INC system)
- Presetting (ABS system)
- Measuring direction switching
- Tolerance judgment (3 pairs of ABS, INC memory function)
- Resolution switching
- Simple calculation: f(x) =Ax
- Key lock
- Calibration mode (Signal output in Digimatic code format)
- Error alarm display

Optional Accessories

- Lifting*
  Lifting lever **21EZA198**
  Lifting knob **21EZA105**
  903594 Pneumatic Lifting Attachment (0.5"/12.7mm models only)

* Dust-water protection is not guaranteed.

- Digimatic power supply unit: **21EZA345A**
  Used in the calibration mode when executing automatic inspection using i-Checker **IC2000**.
  In such a case, purchase connection cable **21EAA194** (1 m), or **21EAA190** (2 m).

Note: It can't be used as a power source when using in the normal mode.

- Contact points for Mitutoyo's Digimatic indicators (optional)
  Refer to pages F-63 to F-68 for details.
- Interchangeable back covers (optional)
  Refer to pages F-69 to F-70 for details.

Output signals and display

Wire	– NG	OK	+ NG	ABS data composition error
Orange (– NG)	Low	High	High	High
Green (OK)	High	Low	High	High
Brown (+ NG)	High	High	Low	High
LED	Red	Green	Red	Red flashing
Display	◀	○	▶	"x.xxE" indication

Note: Logical invert is available.

I/O Specifications

Wire	Signal	I/O	Description
Black	– V (GND)	—	Connected to minus (-) terminal
Red	+ V	—	Power supply (5 to 24 VDC)
Orange	– NG	O	Tolerance judgment result output: Only the terminal corresponding to a judgment result is set to the low level.
Green	OK	O	
Brown	+ NG	O	
Yellow	PRESET_RECALL ZERO	I	External input terminal: If the relevant terminal is set to the low level, its signal becomes true.
Blue	PEAK_START	I	
Shield	FG	—	Connected to GND (Earth)

Note: Measurement data cannot be output.

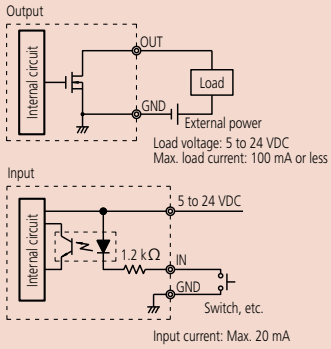

SPECIFICATIONS

Inch/Metric ASME/ANSI/AGD: Type Ø3/8" stem, #4-48UNF thread

Order No.	Range	Resolution	Accuracy (in)	Hysteresis	Repeatability	Measuring force (N)	Mass (g)
543-352-10	0.5 in/ 12.7 mm	0.00005/ 0.0001/ 0.0005 in, 0.001/ 0.01 mm (selectable)	±0.00010	0.00010	0.00010	2.5 or less	295
543-352B-10 (flat back)							285

Inch/Metric ISO/JIS Type: Ø8mm stem, M2.5x0.45 thread

Order No.	Range	Resolution	Accuracy (mm)	Hysteresis H_{MPE}	Repeatability R_{MPE}	Measuring force (N)	Mass (g)
543-351-10	0.5 in/ 12.7 mm	0.00005/ 0.0001/ 0.0005 in, 0.001/ 0.01 mm (selectable)	0.003	0.003	0.002	2.5 or less	295
543-351B-10 (flat back)							285

Metric ISO/JIS Type: Ø8mm stem, M2.5x0.45 thread

Order No.	Range (mm)	Resolution (mm)	Accuracy (mm)	Hysteresis H_{MPE}	Repeatability R_{MPE}	Measuring force (N)	Mass (g)
543-350-10	12.7	0.001/0.01 (selectable)	0.003	0.003	0.002	2.5 or less	295
543-350B-10 (flat back)							285

Note 1: Display readout does not rotate.
Note 2: MAX/MIN holding: sample rate is 100 readings/s; max. rate of change of reading is 100 µm/s or less.
Note 3: Standard contact point: **901312** (ISO/JIS type), **21BZB005** (ANSI/AGD type)

F

Mitutoyo

Indicators

ABSOLUTE Digimatic Indicator ID-CJX
SERIES 543 — Signal Output Function Type

DIMENSIONS

ASME / ANSI / AGD Type

Unit: in

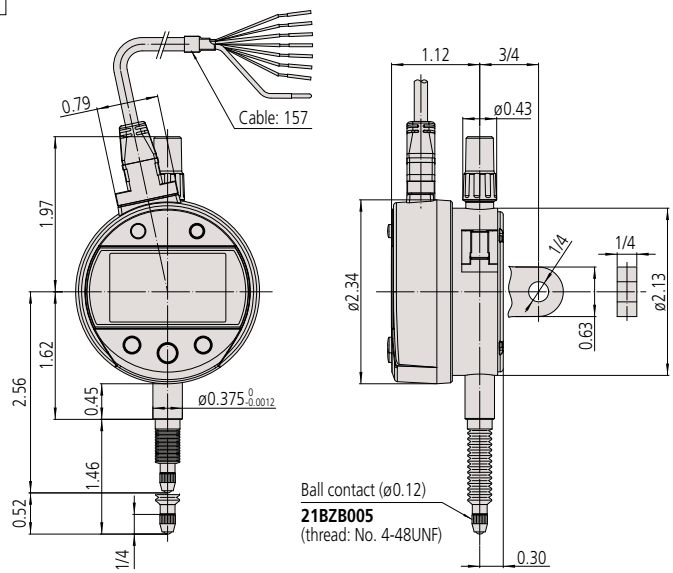

ISO / JIS Type

Unit: mm

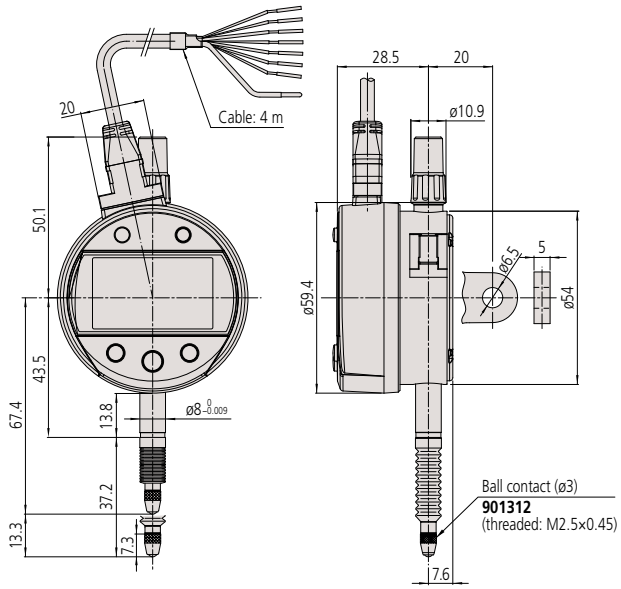

Need Service?

Digimatic Indicator ID-H
SERIES 543 — High Accuracy and High Functionality Type

- This digital indicator offers the excellent accuracy, functionality and high resolution expected with top-of-the-line indicators.
- Take advantage of its high accuracy backed up by 20 µinch / 0.5 µm resolution, remote control functionality via a handheld controller (or an RS-232C interface) and easy runout measurements with the well-established analog bar display.
- The maximum, minimum, or runout value (MAX - MIN) can be measured.
- An advanced, remote control system can be implemented with the built-in RS-232C interface and a PC.
- With the optional remote controller, operations such as zero-setting and presetting can be made without touching the indicator body, thereby enabling more stable and high accuracy measurement.

Remote controller (optional)

543-564

Application example using comparator stand

Comparator stand
215-505-10

Optional Output Devices

Order No.	Description
Wired	
264-020	USB Input tool (**IT-020U**)
- 936937	Connecting Cable (**1m**)
- 965014	Connecting Cable (**2m**)
06AFM380D	USB Input Tool Direct (**2m**)
Wireless	
264-620	Transmitter (**IP67**)
264-624	Transmitter (**IP67, Bluetooth**)
264-621	Transmitter (**Buzzer**)
264-625	Transmitter (**Buzzer, Bluetooth**)
- 02AZD790D	Connecting Cable
- 02AZE140D	Connecting Cable (**foot switch compatible**)

Note: Model uses connector type "D"
For additional accessories refer to pages F-63 to F-74

- Remote controller: **21EZA099**
- Lifting cable: **21JZA295** (stroke 30 mm)
- With auto-stop function:
  21JZA301 (overall length 300 mm)
- Lifting knob: **21EZA101**

- RS-232C Connection cable (2 m): **21EAA131**
- Lug-on-center back:
  101040 (ISO/JIS type)
  101306 (ASME/ANSI/AGD type)
- Contact points for Mitutoyo's Digimatic indicators (optional)
  Refer to pages F-63 to F-68 for details.
- Granite comparator stands (optional)
  Refer to page F-101 for details.
- Comparator stands (optional)
  Refer to page F-102 for details.

SPECIFICATIONS

Inch / Metric ASME/ANSI/AGD: Type Ø3/8" stem, #4-48UNF thread

Order No.	Range	Resolution	Accuracy (in)	Hysteresis	Repeatability	Measuring force (N)	Mass (g)
543-562	1.2 in/ 30.48 mm	0.00002/ 0.00005/ 0.0001 in, 0.0005/ 0.001 mm (selectable)	±0.00006	0.00006	0.00004	2.0 or less	300
543-564	2.4 in/ 60.96 mm		±0.00010	0.00010		2.5 or less	

Metric ISO/JIS Type: Ø8mm stem, M2.5x0.45 thread

Order No.	Range (mm)	Resolution (mm)	Accuracy (mm)	Hysteresis H_{MPE}	Repeatability R_{MPE}	Measuring force (N)	Mass (g)
543-561	30.48	0.0005/ 0.001 (selectable)	0.0015	0.0015	0.001	2.0 or less	290
543-563	60.96		0.0025	0.0025		2.5 or less	305

- Power source: 5.9 V DC (via AC adapter) **06AGZ369JA**

Indicators

Digimatic Indicator ID-H
SERIES 543 — High Accuracy and High Functionality Type

DIMENSIONS

ASME / ANSI / AGD Type

Unit: in

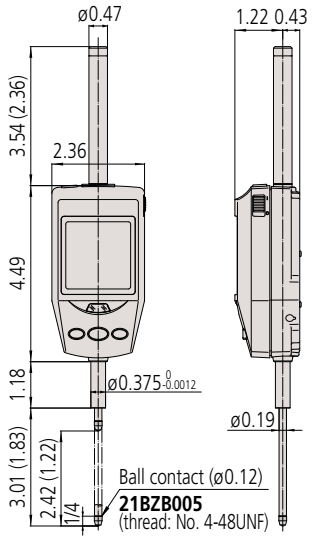

Note: ( ) = **543-562**

ISO / JIS Type

Unit: mm

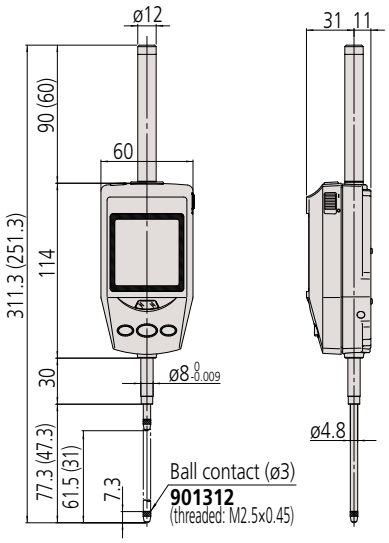

Note: ( ) = **543-561**

Need Calibration?

EC Counter

EC Counter
SERIES 542 — Low-cost, Modular Type Display Unit

Functions
- Preset
- Tolerance judgment (3 steps)

- The counter can be connected to a gage that has a data output function, such as a Digimatic indicator or linear gage.
- 3 sets of limiting values can be displayed and output.
- Compact size (DIN 96×48 mm)

542-007A

SPECIFICATIONS

Order No.		542-007A
Resolution ( ) indicates maximum display range		0.0005 in (±99.9995 in) 0.001 in (±999.999 in) 0.00005 in (±9.99995 in) 0.0001 in (±99.999 in) 0.01 mm (±9999.99) 0.001 mm (±9999.999) [automatic setting by gage]
Tolerance judgment display		LED display (3 steps: Amber, Green, Red)
External output (switching type)	Tolerance judgment output	–NG, OK, +NG (open-collector)
	Data output	Digimatic output
Control input		External PRESET, external HOLD
Operating temperature		0 to 40 °C (RH 20 to 80%, no condensation)
Storage temperature		–10 to 50 °C (RH 20 to 80%, no condensation)
External dimensions		96 (W) ×48 (H) ×84.6 (D) mm
Power Source		AC adapter: **12BAR954** AC cable: **12BAK730**
Standard Accessories		AC adapter, AC cable, rubber feet
Mass		500 g

DIMENSIONS

Unit: mm

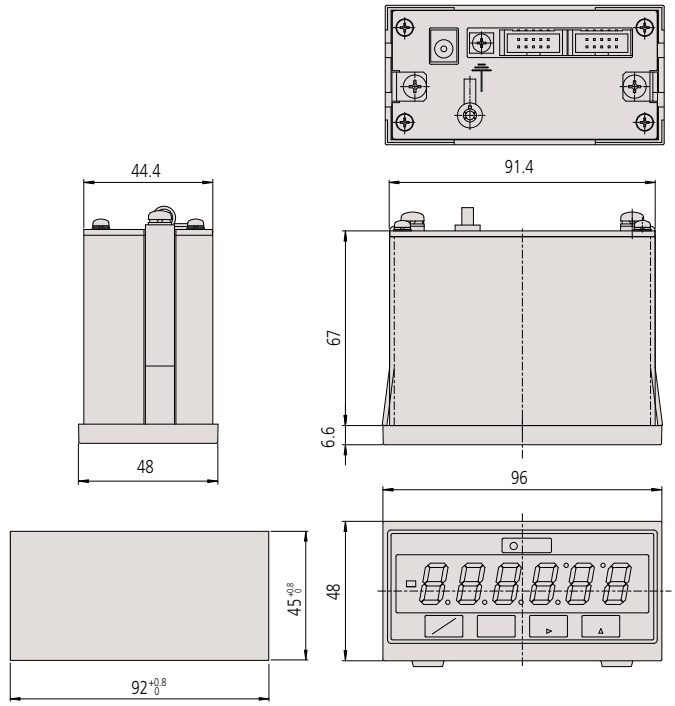

F

Dial Indicators

Dial Indicators

Mitutoyo Dial Indicators have long been used by many of our customers. In full recognition of their needs, we have devoted ourselves to the research and development necessary to produce high-quality and high-accuracy dial indicators. Due to the recent re-acknowledgement of the importance of measurement technologies, the demands on dial indicators are many and varied, from installation in measuring jigs, to mounting countless types of precision equipment. We offer numerous models with various types of dial faces, measuring ranges, graduation styles and environmental resistance ratings. The stems, which ensure the fixture reliability, and the spindles, which are the basis of accuracy, have excellent resistance against harsh use thanks to the hardened stainless steel construction. 0.01 mm resolution dial indicators have a main gear made of stainless steel with high resistance to wear and deformation. 0.001 mm graduation dial indicators employ a sector gear made of a special alloy in order to further increase the resistance to wear.
Many models employ an O-ring to ensure airtightness between the outer frame and the bezel in order to prevent water or oil penetration from the front.
Mitutoyo Dial Indicators are manufactured and inspected according to JIS B 7503:2017. (Inspection orientation: vertical)
Important factors in choosing a dial indicator are the size (bezel diameter), resolution (graduation) and measuring range. Use the table on the right to help choose a suitable model for your application.

FEATURES: A Series (SERIES 2, 3, 4)

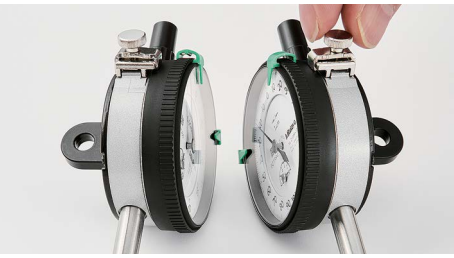

- No through screw-holes on the frame for high oil- and dust-resistance. The bezel clamp (optional) can be attached either to the right or left side.
- Improved impact- and oil-resistant materials are employed in the bezel. Easier reading is due to the improved shape of the crystal face.

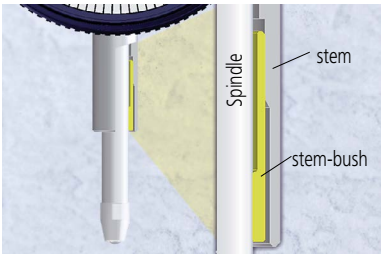

- Revolutionary stem-bush design for trouble-free stem clamping (longer clamping range; maximum tightening torque at the clamping point with M5 screw: 150 N•cm).

- The spindle lifting lever (optional: **21EZA198**) can be attached to either the right or left side providing high operability and smooth movement. This lever can be easily installed and removed.

- The optional limit hands (1) can be moved without interfering with the optional bezel clamp (2).

- Application of anti-stain and anti-reflective coating improves scale visibility.

<Conventional model>

<New model>

Parts of a dial indicator

Feature Icons

Icon	Feature description
	Continuous scale
	Balanced scale
	Reverse reading type, Suitable for depth and step measurement.
	One revolution type for easy and error-free reading
	Double scale spacing type, easy-on-the-eyes
	Shockproof
	Waterproof (IP63)
	Waterproof (IP64)
	With damper at top rest point
	With damper at lowest rest point
	Jeweled bearing
	Peak retaining
	Dustproof
	With coaxial revolution counter
	Back Plunger
	Adjustable hand

Note: Mitutoyo produces ASME-compatible products. Contact us for details.

Dial Indicators

SERIES 1 — Compact Type, Extra Small Diameter

- These compact, space-saving dial indicators make it easy to incorporate into gaging jigs.
- The indicator is highly durable thanks to its oil- and water-tight design, quenched hardened stainless-steel, carbide contact point, and a grand gear made of wear- and deformation-resistant material.
- Application of an anti-reflective and hard surface coating improves scale visibility along with scratch and chemical resistance.

1911A-10

1003A

F

SPECIFICATIONS

Inch Stem ø3/8", #4-48 UNF ANSI/AGD type ISO/JIS type

Order No.		Graduation (in)	Range (range/rev) (in)	Accuracy (in)		Repeat-ability (in)	Dial reading	Measuring force (N)
w/lug	Flat-back			First 1 Rev/2.5 Rev/10 Rev	Retrace			
1921A-10	**1921AB-10**	0.001	0.1 (0.04)	±0.001/±0.001/—	0.0002	±0.0002	0-20-0	1.8 or less
1923A-10	**1923AB-10**	0.0005	0.05 (0.02)	±0.0005/±0.005/—	0.00016	±0.0001	0-10-0	1.8 or less
1925A-10	**1925AB-10**	0.0001	0.025 (0.01)	±0.0002/±0.0002/—	0.0001	±0.00003	0-5-0	1.8 or less

Metric Stem ø8mm, M2.5x0.45 Thread

Order No.		Graduation (mm)	Range (range/rev) (mm)	Accuracy (µm)				Hysteresis	Repeat-ability	Dial reading	Measuring force (N)
w/lug	Flat-back			1/10 Rev	1/2 Rev	1 Rev	Measuring range				
1911A-10	**1911AB-10**	0.01	2.5 (1)	8	9	10	12	4	3	0-50-0	1.8 or less
1913A-10	**1913AB-10**	0.002	0.5 (0.2)	2.5	4	5	6	2.5	1	0-100-0	1.8 or less
1003A	**1003AB**	0.01	4 (1)	8	10	11	13	4	3	0-50-0	1.4 or less

Find a Distributor

Dial Indicators

SERIES 1 — Compact Type, Extra Small Diameter

DIMENSIONS

ISO / JIS Type Unit: mm

1911A-10 / 1913A-10

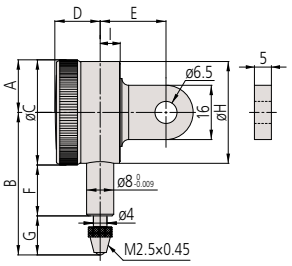

1003A

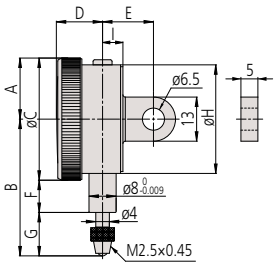

ISO / JIS Type Unit: in

1921A-10 / 1923A-10 / 1925A-10

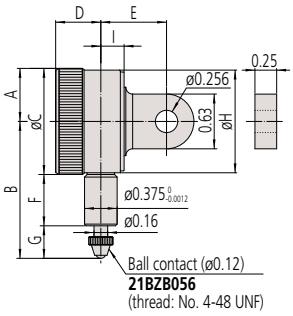

Inch Unit: in

Order No.	A	B	C	D	E	F	G	H	I	Mass (g) w/lug	Mass (g) Flat-back
1921A-10	0.61	1.58	1.22	0.5	3/4	0.59	0.37	1.18	0.27	55	51
1923A-10	0.61	1.51	1.22	0.5	3/4	0.59	0.31	1.18	0.27	55	51
1925A-10	0.61	1.48	1.22	0.5	3/4	0.59	0.28	1.18	0.27	55	51

Metric Unit: mm

Order No.	A	B	C	D	E	F	G	H	I	Mass (g) w/lug	Mass (g) Flat-back
1911A-10	15.5	42	31	12.7	19.4	15.1	11.5	30	6	55	51
1913A-10	15.5	39.5	31	12.7	19.4	15.1	8.9	30	6	55	51
1003A	18	40.3	36	13.5	15	9.5	12.8	32	6	51	48

Note 1: Limit hands, bezel clamps and lifting levers cannot be installed.
Note 2: The shoulder on a contact point (standard accessory) acts as a stop to prevent spindle overrun that may otherwise damage the indicator. When replacing it with an optional contact point with a connector not exceeding ø7 mm in outside diameter, insert a washer (with ø7 mm outside diameter, ø3 mm inside diameter, and approximately 0.5 mm thickness) above the contact point.
Note 3: Being fixed by only two retaining screws, the back cannot be rotated by 90° to change the orientation of the lug.

Balanced scale

Graduation: 0.01 mm, Measuring range: 2.5 mm

1911A-10
Jeweled bearing

Balanced scale

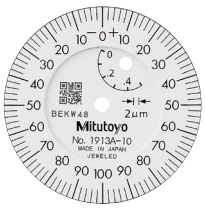

Graduation: 0.002 mm, Measuring range: 0.5 mm

1913A-10
Jeweled bearing

Balanced scale

Graduation: 0.01 mm, Measuring range: 4 mm

1003A

Got Questions?

SERIES 1 — Compact Type, Small Diameter

- Compact dial indicators ideal for restricted-space applications in gaging jigs.
- The indicator is highly durable thanks to its oil- and water-tight design, quenched hardened stainless-steel, carbide contact point, and a grand gear made of wear- and deformation-resistant material.
- Application of an anti-reflective and hard surface coating improves scale visibility along with scratch and chemical resistance.

1044A

SPECIFICATIONS

Inch Stem ø3/8", #4-48 UNF

ANSI/AGD type ISO/JIS type

Order No. w/lug	Order No. Flat-back	Graduation (in)	Range (range/rev) (in)	Accuracy (in) First 1 Rev/2.5 Rev/10 Rev	Accuracy (in) Retrace	Repeat-ability (in)	Dial reading	Measuring force (N)
1410A	**1410AB**	0.001	0.25 (0.1)	±0.001/±0.001/—	0.0002	±0.0002	0-100	1.4 or less
1411A	**1411AB**	0.001	0.25 (0.1)	±0.001/±0.001/—	0.0002	±0.0002	0-50-0	1.4 or less
1410A-10	**1410AB-10**	0.001	0.25 (0.1)	±0.001/±0.001/—	0.0002	±0.0002	0-100	1.4 or less
1780A	**1780AB**	0.001	0.125 (0.05)	±0.001/±0.001/—	0.0002	±0.0002	0-50	1.4 or less
1781A	**1781AB**	0.001	0.125 (0.05)	±0.001/±0.001/—	0.0002	±0.0002	0-25-0	1.4 or less
1506A	**1506AB**	0.0005	0.125 (0.05)	±0.0005/±0.0005/—	0.00016	±0.0001	0-50	1.4 or less
1507A	**1507AB**	0.0005	0.125 (0.05)	±0.0005/±0.0005/—	0.00016	±0.0001	0-25-0	1.4 or less
1670A	**1670AB**	0.0005	0.1 (0.04)	±0.0005/±0.0005/—	0.00016	±0.0001	0-40	1.4 or less
1671A	**1671AB**	0.0005	0.1 (0.04)	±0.0005/±0.0005/—	0.00016	±0.0001	0-20-0	1.4 or less
1802A-10	**1802AB-10**	0.0001	0.025 (0.01)	±0.0001/±0.0001/—	0.0001	±0.00003	0-10	1.5 or less
1803A-10	**1803AB-10**	0.0001	0.025 (0.01)	±0.0001/±0.0001/—	0.0001	±0.00003	0-5-0	1.5 or less

Metric Stem ø8mm, M2.5x0.45 Thread

Order No. w/lug	Order No. Flat-back	Graduation (mm)	Range (range/rev) (mm)	Accuracy (µm) 1/10 Rev	Accuracy (µm) 1/2 Rev	Accuracy (µm) 1 Rev	Accuracy (µm) Measuring range	Hysteresis	Repeat-ability	Dial reading	Measuring force (N)
1013A-10	**1013AB-10**	0.002	1 (0.2)	2.5	4	5	6	2.5	1	0-100-0	1.5 or less
1040A	**1040AB**	0.01	3.5 (0.5)	8	10	11	13	4	3	±0-50	1.4 or less
1041A	**1041AB**	0.01	3.5 (0.5)	8	10	11	13	4	3	0-25-0	1.4 or less
1044A	**1044AB**	0.01	5 (1)	8	10	11	13	4	3	±0-100	1.4 or less
1044A-15	**1044AB-15**	0.01	5 (1)	8	10	11	13	4	3	±0-100	0.4 or less*
1044A-60	**1044AB-60**	0.01	5 (1)	8	10	11	13	4	3	±0-100	2.0 or less
1045A	**1045AB**	0.01	5 (1)	8	10	11	13	4	3	0-50-0	1.4 or less
1109A-10	**1109AB-10**	0.001	1 (0.2)	2.5	3.5	4.5	5	2	1	0-100-0	1.5 or less
1124A	**1124AB**	0.005	3.5 (0.5)	6	9	10	12	3.5	3	±0-50	1.4 or less

* For low measuring force type, use in the vertical orientation.

Dial Indicators

SERIES 1 — Compact Type, Small Diameter

DIMENSIONS

ANSI / AGD Type

Unit: in

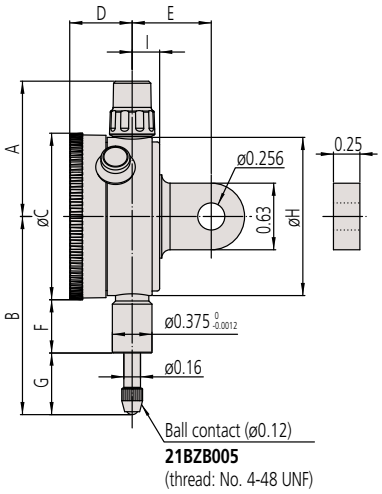

Order No.	A	B	C	D	E	F	G	H	I
1410A	1.28	1.87	1.57	0.59	3/4	0.50	0.58	1.50	0.26
1411A	1.28	1.87	1.57	0.59	3/4	0.50	0.58	1.50	0.26
1410A-10	1.28	1.87	1.57	0.59	3/4	0.50	0.58	1.50	0.26
1780A	1.28	1.74	1.57	0.59	3/4	0.50	0.44	1.50	0.26
1781A	1.28	1.74	1.57	0.59	3/4	0.50	0.44	1.50	0.26
1506A	1.28	1.74	1.57	0.59	3/4	0.50	0.44	1.50	0.26
1507A	1.28	1.74	1.57	0.59	3/4	0.50	0.44	1.50	0.26
1670A	1.28	1.71	1.57	0.59	3/4	0.50	0.42	1.50	0.26
1671A	1.28	1.71	1.57	0.59	3/4	0.50	0.42	1.50	0.26
1802A-10	1.28	1.63	1.57	0.59	3/4	0.50	0.33	1.50	0.26
1803A-10	1.28	1.63	1.57	0.59	3/4	0.49	0.33	1.50	0.26

Note: Refer to pages F-63 to F-68 for details of contact points.

ISO / JIS Type

Unit: mm

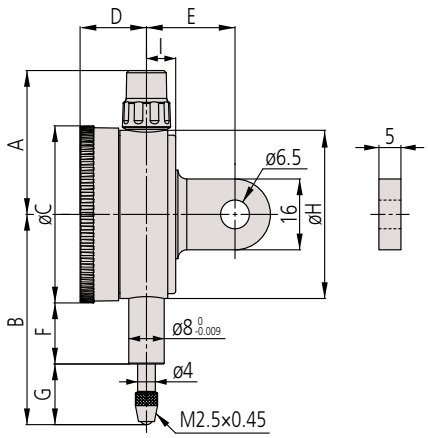

Order No.	A	B	C	D	E	F	G	H	I
1013A-10	32.5	49	40	15	20	13.8	15.2	38	6.6
1040A	32.5	46	40	15	20	13.8	12.2	38	6.6
1041A	32.5	46	40	15	20	13.8	12.2	38	6.6
1044A	32.5	47.5	40	15	20	13.8	13.7	38	6.6
1044A-15*	32.5	47.5	40	15	20	13.8	13.7	38	6.6
1044A-60	32.5	57	40	15	20	12.2	24.8	38	6.6
1045A	32.5	47.5	40	15	20	13.8	13.7	38	6.6
1109A-10	32.5	49	40	15	20	13.8	15.2	38	6.6
1124A	32.5	46	40	15	20	13.8	12.2	38	6.6

* Use in the vertical orientation (contact point downward) for the low measuring force model.
Note: Refer to pages F-63 to F-68 for details of contact points.

Optional Accessories

- Limit hand (2 pcs.): **21AAB363**

- Bezel clamp: **21RZA149**

Talk to Sales

Dial Indicators

Continuous scale

Graduation: 0.01 mm,
Measuring range: 3.5 mm

1040A

Double scale spacing

Balanced scale

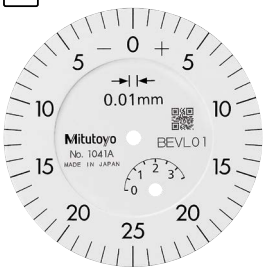

Graduation: 0.01 mm,
Measuring range: 3.5 mm

1041A

Double scale spacing

Continuous scale

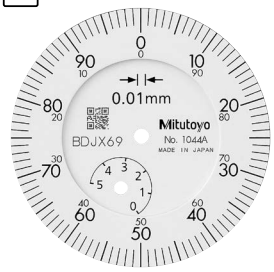

Graduation: 0.01 mm,
Measuring range: 5 mm

1044A

1044A-15

Jeweled bearing

Balanced scale

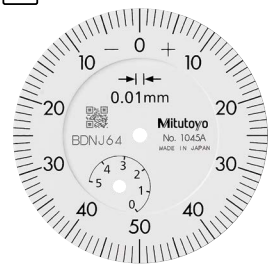

Graduation: 0.01 mm,
Measuring range: 5 mm

1045A

Balanced scale

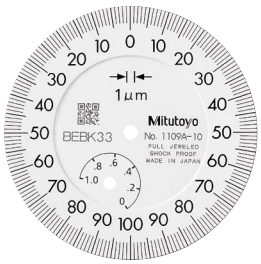

Graduation: 0.001 mm,
Measuring range: 1 mm

1109A-10

Shockproof

Jeweled bearing

Balanced scale

Graduation: 0.002 mm,
Measuring range: 1 mm

1013A-10

Shockproof

Jeweled bearing

Continuous scale

Graduation: 0.005 mm,
Measuring range: 3.5 mm

1124A

Continuous scale

Graduation: 0.01 mm,
Measuring range: 5 mm

1044A-60

Waterproof

FEATURES

Inch ANSI/AGD type ISO/JIS type

Order No. w/lug	Order No. Flat-back				
1410A	1410AB	✔			
1411A	1411AB		✔		
1410A-10	1410AB-10	✔		✔	
1780A	1780AB	✔			
1781A	1781AB		✔		
1506A	1506AB	✔			
1507A	1507AB		✔		
1670A	1670AB	✔			
1671A	1671AB		✔		
1802A-10	1802AB-10	✔		✔	✔
1803A-10	1803AB-10		✔	✔	✔

Metric

Order No. w/lug	Order No. Flat-back						
1013A-10	1013AB-10		✔		✔	✔	
1040A	1040AB	✔		✔			
1041A	1041AB		✔	✔			
1044A	1044AB	✔					
1044A-15	1044AB-15	✔				✔	
1044A-60	1044AB-60	✔					✔
1045A	1045AB		✔				
1109A-10	1109AB-10		✔		✔	✔	
1124A	1124AB	✔					

F

Mitutoyo

Dial Indicators

SERIES 1 — Compact One Revolution Type for Error-Free Reading

- The one revolution dial indicator (compact type) prevents the possibility of reading errors.
- Proprietary Mitutoyo shock-proof mechanism is incorporated, providing improved resistance to shock due to sudden spindle retraction caused by impact.
- The indicator is highly durable thanks to its oil- and water-tight design, quenched hardened stainless-steel, carbide contact point, and a grand gear made of wear- and deformation-resistant material.
- Application of an anti-reflective and hard surface coating improves scale visibility along with scratch and chemical resistance.
- The red dead zone in the middle of the dial face is separated from the bezel and doesn't cover the graduations. Therefore, users can always see the range where accuracy is not guaranteed even if the bezel is rotated.

1929A

One revolution type Back Plunger dial gages are also available. (Refer to pages F-58 to F-59 for details.)

2990A-10

SPECIFICATIONS

Inch Stem ø3/8", #4-48 UNF — ANSI/AGD type / ISO/JIS type

Order No. w/lug	Order No. Flat-back	Graduation (in)	Range (range/rev) (in)	Accuracy (in) First 1 Rev/2.5 Rev/10 Rev	Accuracy (in) Retrace	Repeat-ability (in)	Dial reading	Measuring force (N)
1909A-62	**1909AB-62**	0.0005	0.04 (0.056)	±0.0005/—/—	0.00016	±0.0001	20-0-20	1.4 or less
1910A-72	**1910AB-72**	0.0001	0.006 (0.008)	±0.0001/—/—	0.0001	±0.00003	3-0-3	1.5 or less

Metric Stem ø8mm, M2.5x0.45 Thread

Order No. w/lug	Order No. Flat-back	Graduation (mm)	Range (range/rev) (mm)	Accuracy (µm) 1/10 Rev	Accuracy (µm) 1/2 Rev	Accuracy (µm) 1 Rev	Accuracy (µm) Measuring range	Hysteresis	Repeat-ability	Dial reading	Measuring force (N)
1929A	**1929AB**	0.01	1 (1.4)	7	—	—	11	4	3	50-0-50	1.4 or less
1929A-62	**1929AB-62**	0.01	1 (1.4)	7	—	—	11	4	3	50-0-50	1.4 or less
1900A-10	**1900AB-10**	0.001	0.1 (0.14)	2.5	—	—	5	2	1	50-0-50	1.5 or less
1900A-72	**1900AB-72**	0.001	0.1 (0.14)	2.5	—	—	5	2	1	50-0-50	1.5 or less

DIMENSIONS

ISO/JIS Type Unit: mm

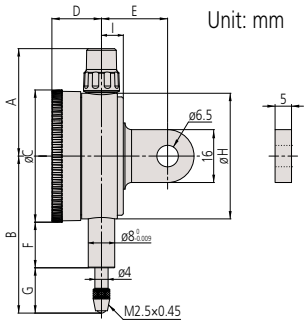

ANSI/AGD Type Unit: in

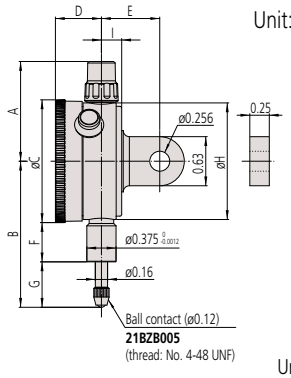

Inch Unit: in

Order No.	A	B	C	D	E	F	G	H	I	Mass (g) w/lug	Mass (g) Flat-back
1909A-62	1.28	1.64	1.57	0.59	0.75	0.50	0.35	1.50	0.26	90	70
1910A-72	1.28	1.61	1.57	0.59	0.75	0.50	0.31	1.50	0.26	90	70

Metric Unit: mm

Order No.	A	B	C	D	E	F	G	H	I	Mass (g) w/lug	Mass (g) Flat-back
1929A	32.5	47.5	40	15	20	13.8	13.7	38	6.6	90	70
1929A-62	32.5	47.5	40	15	20	13.8	13.7	38	6.6	90	70
1900A-10	32.5	53.5	40	15	20	13.8	19.7	38	6.6	95	75
1900A-72	32.5	53.5	40	15	20	13.8	19.7	38	6.6	95	75

Note: Refer to pages F-63 to F-68 for details of contact points.

Special Specifications

Upon request, we can manufacture custom types with changed graduation numbers, graduation lines, dead zones, etc. Please contact your nearest M³ Solution Center for more information.

Optional Accessories

- Limit hand (2 pcs.), Bezel clamp
  Refer to page F-49 for details.

Balanced scale

Graduation: 0.001 mm,
Measuring range: 0.1 mm

1900A-10
- One revolution
- Shockproof
- Jeweled bearing

1900A-72
- One revolution
- Shockproof
- Dustproof
- Jeweled bearing

Balanced scale

Graduation: 0.01 mm,
Measuring range: 1 mm

1929A
- One revolution
- Shockproof

1929A-62
- One revolution
- Shockproof
- Dustproof

FEATURES

Inch ANSI/AGD type ISO/JIS type

Order No. w/lug	Order No. Flat-back					
1909A-62	1909AB-62	✔	✔		✔	✔
1910A-72	1910AB-72	✔	✔	✔	✔	✔

Metric

Order No. w/lug	Order No. Flat-back					
1929A	1929AB	✔	✔			✔
1929A-62	1929AB-62	✔	✔		✔	✔
1900A-10	1900AB-10	✔	✔	✔		✔
1900A-72	1900AB-72	✔	✔	✔	✔	✔

Need Repair?

Dial Indicators

Back Plunger Type Dial Indicators SERIES 1

- Back plunger type dial indicators are suitable for mounting onto leveling machine tool tables or inspection jigs, and for use in situations where standard dial indicators are difficult to read.
- Models **1960A** and **1961A**, which use proprietary Mitutoyo shock-proofing mechanism, have excellent durability and shock resistance.

1160A

SPECIFICATIONS

Inch Stem ø3/8", #4-48 UNF

ANSI/AGD type | ISO/JIS type

Order No.	Graduation (in)	Range (range/rev) (in)	Accuracy (in)		Repeatbility (in)	Dial reading	Measuring force (N)
			First 1 Rev/2.5 Rev/10 Rev	Retrace			
1961A	0.001	0.04 (0.05)	±0.001/—/—	0.0002	±0.0002	20-0-20	1.4 or less
1166A	0.001	0.2 (0.05)	±0.001/±0.001/±0.001	0.00033	±0.0002	±0-50	1.4 or less
1167A	0.001	0.2 (0.05)	±0.001/±0.001/±0.001	0.00033	±0.0002	0-25-0	1.4 or less
1168A	0.001	0.2 (0.05)	±0.001/±0.001/±0.001	0.00033	±0.0002	50-0	1.4 or less

Metric Stem ø8mm, M2.5x0.45 Thread

Order No.	Graduation (mm)	Range (range/rev) (mm)	Accuracy (µm)				Hysteresis	Repeat-ability	Dial reading	Measuring force (N)
			1/10 Rev	1/2 Rev	1 Rev	Measuring range				
1960A	0.01	1 (1.27)	8	—	—	14	4	3	50-0-50	1.4 or less
1160A	0.01	5 (1)	8	12	14	16	4	3	±0-100	1.4 or less
1162A	0.01	5 (1)	8	12	14	16	4	3	100-0	1.4 or less

Note 1: The bezel clamp cannot be used.

DIMENSIONS

ISO/JIS Type Unit: mm

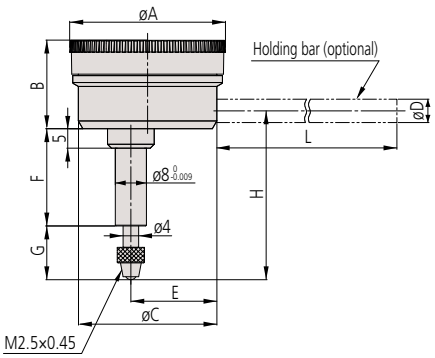

Order No.	A	B	C	E	F	G	H	Mass (g) (Bar excluded)
1160A	40	22.7	35	21.8	25	13.8	43.3	80
1162A	40	22.7	35	21.8	25	13.8	43.3	80
1960A	40	22.7	35	21.8	28.7	12.8	46	80

ANSI/AGD Type Unit: in

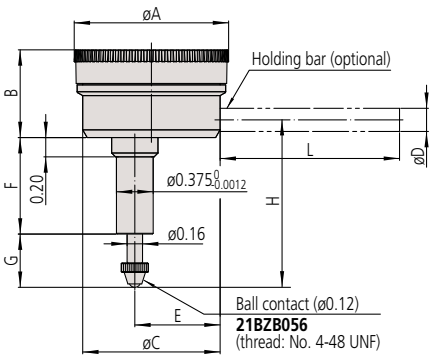

Order No.	A	B	C	E	F	G	H	Mass (g) (Bar excluded)
1166A	1.57	0.89	1.38	7/8	0.98	0.51	1.67	80
1167A	1.57	0.89	1.38	7/8	0.98	0.51	1.67	80
1168A	1.57	0.89	1.38	7/8	0.98	0.51	1.67	80
1961A	1.57	0.89	1.38	7/8	0.98	0.43	1.59	80

Note 1: Contact point (standard accessory) for all products in this page has a role as a top dead point stopper. When replacing it with an optional contact point with a connector not exceeding ø7 mm in outside diameter, insert a washer (with ø7 mm outside diameter, ø3 mm inside diameter, and approximately 0.5 mm thickness) above the contact point.

Note 2: Refer to pages F-63 to F-68 for details of contact points.

Holding Bar (Optional)

Order No.	øD (mm)	L (mm)
21AAA166	ø6	42
136567	ø6	81
124625	ø6.35	81
21AAA167	ø6.35	42
21AAA168	ø8	42
136568	ø8	81

Note: øD and L: detail shown in drawing below.

Optional Accessories

- Limit hand (2 pcs.): **21AAB363**

Where to Buy

Continuous scale

Graduation: 0.01 mm,
Measuring range: 5 mm

1160A
Back Plunger

Reverse reading

Graduation: 0.01 mm,
Measuring range: 5 mm

1162A
Back Plunger

Balanced scale

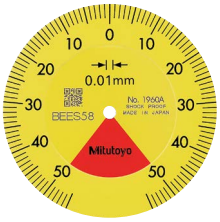

Graduation: 0.01 mm,
Measuring range: 1 mm

1960A
One revolution
Shockproof
Back Plunger

FEATURES

Inch

ANSI/AGD type ISO/JIS type

Order No.						
1961A		✔	✔	✔		✔
1166A	✔					✔
1167A		✔				✔
1168A					✔	✔

Metric

Order No.						
1960A		✔	✔	✔		✔
1160A	✔					✔
1162A					✔	✔

F

Dial Indicators

SERIES 2 — Standard Type, 0.01 mm Graduation

- This model is the most popular Mitutoyo indicator with excellent accuracy and durability. Standard 0.01 mm graduation dial indicators have a bezel with an outside diameter of 57 mm.
- The indicator is highly durable thanks to its oil- and water-tight design, quenched hardened stainless-steel, carbide contact point, and a grand gear made of wear- and deformation-resistant material.
- Application of an anti-reflective and hard surface coating improves scale visibility along with scratch and chemical resistance.

2046A

SPECIFICATIONS

Metric Stem ø8mm, M2.5x0.45 Thread

ISO/JIS type

Order No.		Graduation (mm)	Range (range/rev) (mm)	Accuracy (µm)				Hysteresis	Repeat-ability	Dial reading	Measuring force (N)
w/lug	Flat-back			1/10 Rev	1/2 Rev	1 Rev	Measuring range				
2046A	**2046AB**	0.01	10 (1)	5	9	10	13	3	3	±0-100	1.4 or less
2046A-09	**2046AB-09**	0.01	10 (1)	5	9	10	15	3	3	±0-100	1.4 or less
2047A	**2047AB**	0.01	10 (1)	5	9	10	13	3	3	0-50-0	1.4 or less
2902A	**2902AB**	0.01	10 (1)	5	9	10	13	3	3	100-0	1.4 or less
2310A-10	**2310AB-10**	0.01	10 (1)	5	9	10	15	3	3	±0-100	1.4 or less
2044A	**2044AB**	0.01	5 (1)	5	9	10	12	3	3	±0-100	1.4 or less
2044A-09	**2044AB-09**	0.01	5 (1)	5	9	10	12	3	3	±0-100	1.4 or less
2045A	**2045AB**	0.01	5 (1)	5	9	10	12	3	3	0-50-0	1.4 or less

DIMENSIONS

ISO/JIS Type

Unit: mm

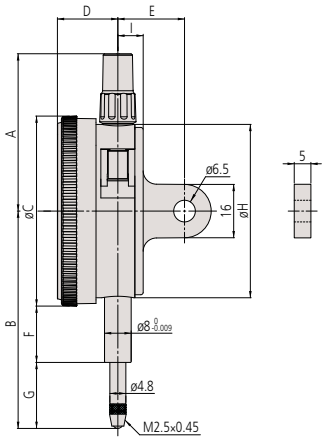

Order No.	A	B	C	D	E	F	G	H	I	Mass (g)	
										w/lug	Flat-back
2046A	47.2	65.2	57	18.1	20	16.9	19.8	52	7.6	144	135
2046A-09	47.2	65.2	57	18.1	20	16.9	19.8	52	7.6	146	137
2047A	47.2	65.2	57	18.1	20	16.9	19.8	52	7.6	144	135
2902A	47.2	65.2	57	18.1	20	16.9	19.8	52	7.6	144	135
2310A-10	47.2	65.2	57	18.1	20	16.9	19.8	52	7.6	146	137
2044A	47.2	65.2	57	18.1	20	16.9	19.8	52	7.6	145	136
2044A-09	47.2	65.2	57	18.1	20	16.9	19.8	52	7.6	147	138
2045A	47.2	65.2	57	18.1	20	16.9	19.8	52	7.6	145	136

Note: Refer to pages F-63 to F-68 for details of contact points.

Get a Quote

Optional Accessories

• Limit hand (2 pcs.): **21AZB195**

• Bezel clamp: **21AZB148**

SERIES 2 — Standard Type, 0.01 mm Graduation

Continuous scale

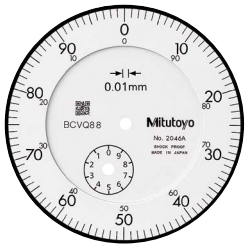

Graduation: 0.01 mm, Measuring range: 10 mm

2046A
With damper at top rest point

2046A-09
Shockproof

Balanced scale

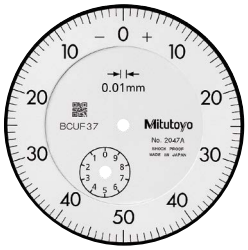

Graduation: 0.01 mm, Measuring range: 10 mm

2047A
With damper at top rest point

Reverse reading type. Suitable for depth and step measurement.

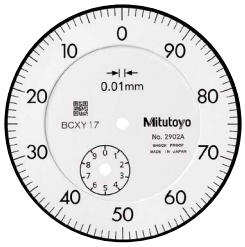

Graduation: 0.01 mm, Measuring range: 10 mm

2902A
With damper at top rest point

Continuous scale

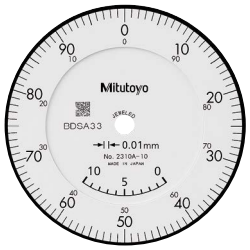

Graduation: 0.01 mm, Measuring range: 10 mm

2310A-10
With coaxial revolution counter
Jeweled bearing

Continuous scale

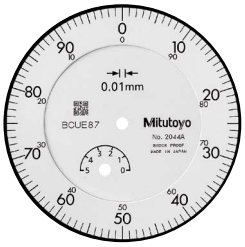

Graduation: 0.01 mm, Measuring range: 5 mm

2044A
With damper at top rest point

2044A-09
With damper at top rest point
Shockproof

Balanced scale

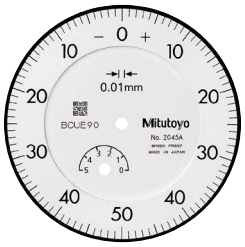

Graduation: 0.01 mm, Measuring range: 5 mm

2045A
With damper at top rest point

FEATURES

Metric

ISO/JIS type

Order No. w/lug	Order No. Flat-back								
2046A	2046AB	✔					✔		
2046A-09	2046AB-09	✔			✔				
2047A	2047AB		✔	✔			✔		
2902A	2902AB			✔			✔		
2310A-10	2310AB-10	✔						✔	✔
2044A	2044AB	✔					✔		
2044A-09	2044AB-09	✔			✔				
2045A	2045AB		✔	✔			✔		

F

Dial Indicators

SERIES 2 — Standard Type, 0.001 mm & 0.005 mm Graduation

- Standard 0.001 mm and 0.005 mm graduation dial indicators have a bezel with an outside diameter of 57 mm. These indicators provide excellent accuracy and durability.
- The indicator is highly durable thanks to its oil- and water-tight design, quenched hardened stainless-steel, carbide contact point, and a grand gear made of wear- and deformation-resistant material.
- Application of an anti-reflective and hard surface coating improves scale visibility along with scratch and chemical resistance.
- The indicator uses jeweled bearings, providing excellent indication sensitivity and durability.

2109A-10

Optional Accessories

- Limit hand (2 pcs.): **21AZB195**

- Bezel clamp: **21AZB148** (for metric type)
  21RZA065* (for inch type)
  *Included with ANSI/AGD models

21AZB148

SPECIFICATIONS

Metric Stem ø8mm, M2.5x0.45 Thread

ISO/JIS type

Order No.		Graduation (mm)	Range (range/rev) (mm)	Accuracy (µm)				Hysteresis	Repeat-ability	Dial reading	Measuring force (N)
w/lug	Flat-back			1/10 Rev	1/2 Rev	1 Rev	Measuring range				
2109A-10	**2109AB-10**	0.001	1 (0.2)	2	3	4	5	2	0.5	0-100-0	1.5 or less
2110A-10	**2110AB-10**	0.001	1 (0.1)	2	3	4	5	2	0.5	±0-100	1.8 or less
2113A-10	**2113AB-10**	0.001	2 (0.2)	2	4	5	7	2	0.5	0-100-0	1.5 or less
2118A-10	**2118AB-10**	0.001	5 (0.2)	3.5	5	6	10	3	1	0-100-100	1.5 or less
2119A-10	**2119AB-10**	0.001	5 (0.2)	3.5	5	6	10	3	1	0-100-0	1.5 or less
2124A-10	**2124AB-10**	0.005	5 (0.5)	5	8	9	12	3	3	±0-50	1.5 or less

DIMENSIONS

ISO/JIS Type

Unit: mm

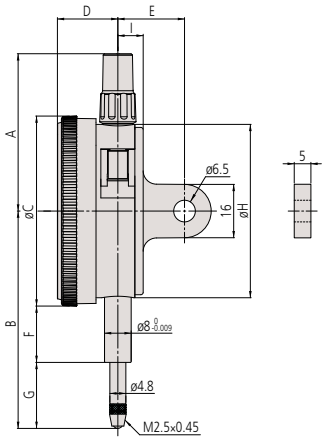

Order No.	A	B	C	D	E	F	G	H	I	Mass (g)	
										w/lug	Flat-back
2109A-10	47.2	60.5	57	18.1	20	16.9	15.1	52	7.6	148	139
2110A-10	47.2	66.5	57	18.1	20	16.9	21.1	52	7.6	149	140
2113A-10	47.2	61	57	18.1	20	16.9	15.6	52	7.6	148	139
2118A-10	47.2	60.7	57	18.1	20	16.9	15.3	52	7.6	146	137
2119A-10	47.2	60.7	57	18.1	20	16.9	15.3	52	7.6	146	137
2124A-10	47.2	60.7	57	18.1	20	16.9	15.3	52	7.6	146	137

Note: Refer to pages F-63 to F-68 for details of contact points.

Need Support?

SERIES 2 — Standard Type, 0.001 mm & 0.005 mm Graduation

Optional Accessories

- Limit hand (2 pcs.): **21AZB195**

- Bezel clamp: **21AZB148** (for metric type)
  21RZA065* (for inch type)
  *Included with ANSI/AGD models

21AZB148

Balanced scale

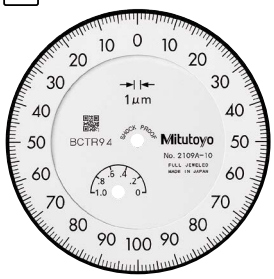

Graduation: 0.001 mm, Measuring range: 1 mm

2109A-10
Shockproof
Jeweled bearing

Continuous scale

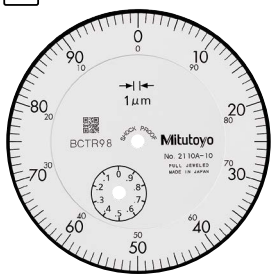

Graduation: 0.001 mm, Measuring range: 1 mm

2110A-10
Double scale spacing
Shockproof
Jeweled bearing

Balanced scale

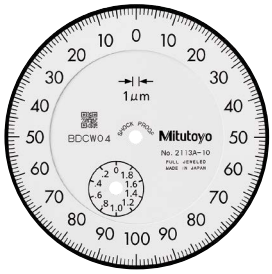

Graduation: 0.001 mm, Measuring range: 2 mm

2113A-10
Shockproof
Jeweled bearing

Continuous scale

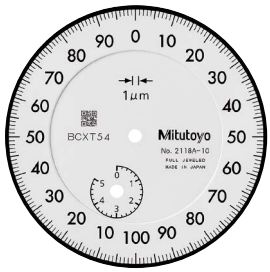

Graduation: 0.001 mm, Measuring range: 5 mm

2118A-10
Jeweled bearing

Balanced scale

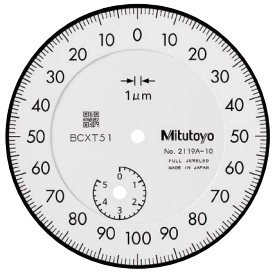

Graduation: 0.001 mm, Measuring range: 5 mm

2119A-10
Jeweled bearing

Continuous scale

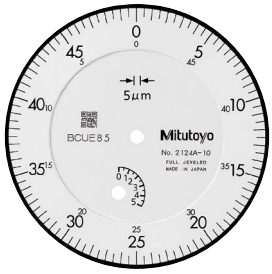

Graduation: 0.005 mm, Measuring range: 5 mm

2124A-10
Jeweled bearing

FEATURES

Metric

ISO/JIS type

Order No. w/lug	Order No. Flat-back						
2109A-10	2109AB-10		✔	✔		✔	
2110A-10	2110AB-10	✔		✔		✔	✔
2113A-10	2113AB-10		✔	✔		✔	
2118A-10	2118AB-10	✔				✔	
2119A-10	2119AB-10		✔			✔	
2124A-10	2124AB-10	✔				✔	

F

Dial Indicators

SERIES 2 — Water-Proof Type, 0.01 mm & 0.001 mm Graduation

- Standard 0.01 mm and 0.001 mm graduation dial indicators have a highly water-resistant bezel with an outside diameter of 57 mm.
- O-rings and rubber bellows are used to prevent water and oil penetration.
- Excellent in accuracy and durability.
- The indicator is highly durable thanks to its oil- and water-tight design, quenched hardened stainless-steel, carbide contact point, and a grand gear made of wear- and deformation-resistant material.
- Application of an anti-reflective and hard surface coating improves scale visibility along with scratch and chemical resistance.

2046A-60

SPECIFICATIONS

Metric Stem ø8mm, M2.5x0.45 Thread

ISO/JIS type

Order No. w/lug	Order No. Flat-back	Graduation (mm)	Range (range/rev) (mm)	Accuracy (µm) 1/10 Rev	Accuracy (µm) 1/2 Rev	Accuracy (µm) 1 Rev	Accuracy (µm) Measuring range	Hysteresis	Repeat-ability	Dial reading	Measuring force (N)
2046A-60	**2046AB-60**	0.01	10 (1)	5	9	10	13	3	3	±0-100	2.5 or less
2044A-60	**2044AB-60**	0.01	5 (1)	5	9	10	12	3	3	±0-100	2.5 or less
2109A-70	**2109AB-70**	0.001	1 (0.2)	2	3	4	5	2	0.5	0-100-0	2.0 or less
2110A-70	**2110AB-70**	0.001	1 (0.1)	2	3	4	5	2	0.5	±0-100	2.0 or less

DIMENSIONS

ISO/JIS Type

Unit: mm

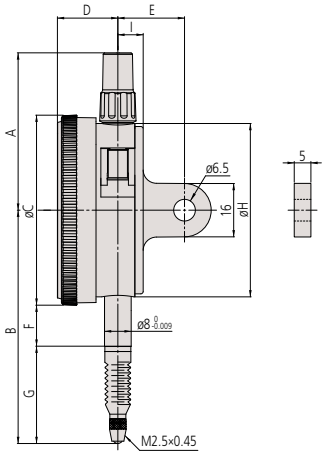

Order No.	A	B	C	D	E	F	G	H	I	Mass (g) w/lug	Mass (g) Flat-back
2046A-60	47.2	74.7	57	18.1	20	12.3	33.9	52	7.6	147	138
2044A-60	47.2	70	57	18.1	20	12.3	29.2	52	7.6	147	138
2109A-70	47.2	65.3	57	18.1	20	12.3	24.5	52	7.6	149	140
2110A-70	47.2	67.5	57	18.1	20	12.3	26.7	52	7.6	150	141

Note: Refer to pages F-63 to F-68 for details of contact points.

Optional Accessories

- Limit hand (2 pcs.): **21AZB195**

- Bezel clamp: **21AZB148** (for metric type)
  21RZA065* (for inch type)
  *Included with ANSI/AGD models

21AZB148

Need Service?

SERIES 2 — Water-Proof Type, 0.01 mm & 0.001 mm Graduation

Optional Accessories

- Limit hand (2 pcs.): **21AZB195**

- Bezel clamp: **21AZB148** (for metric type)
  21RZA065* (for inch type)
  *Included with ANSI/AGD models

21AZB148

Continuous scale

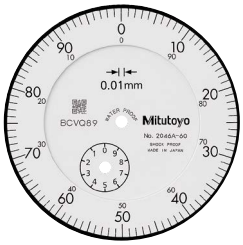

Graduation: 0.01 mm,
Measuring range: 10 mm

2046A-60
Waterproof
With damper at top rest point

Continuous scale

Graduation: 0.01 mm,
Measuring range: 5 mm

2044A-60
Waterproof
With damper at top rest point

Balanced scale

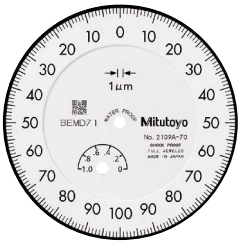

Graduation: 0.001 mm,
Measuring range: 1 mm

2109A-70
Waterproof
Shockproof
Jeweled bearing

Continuous scale

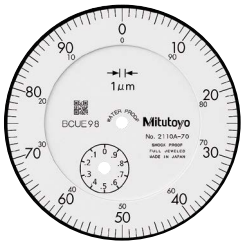

Graduation: 0.001 mm,
Measuring range: 1 mm

2110A-70
Waterproof
Double scale spacing
Shockproof
Jeweled bearing

FEATURES

Metric

ISO/JIS type

Order No. w/lug	Order No. Flat-back							
2046A-60	2046AB-60	✔			✔	✔		
2044A-60	2044AB-60	✔			✔	✔		
2109A-70	2109AB-70		✔	✔	✔		✔	
2110A-70	2110AB-70	✔		✔	✔		✔	✔

F

Dial Indicators

SERIES 2 — Standard Type, Inch Reading

For longer range versions, refer to page F-52

SPECIFICATIONS

Inch — Stem ø3/8", #4-48 UNF — ANSI/AGD type

Order No. w/lug	Order No. Flat-back	Graduation (in)	Range (range/rev) (in)	Accuracy (in) First 1 Rev/2.5 Rev/10 Rev	Accuracy (in) Retrace	Repeat-ability (in)	Dial reading	Measuring force (N)
2414A	**2414AB**	0.001	0.5 (0.1)	±0.001/±0.001/±0.001	0.0002	±0.0002	±0-100	1.8 or less
2415A	**2415AB**	0.001	0.5 (0.1)	±0.001/±0.001/±0.001	0.0002	±0.0002	0-50-0	1.8 or less
2914A	**2914AB**	0.001	0.5 (0.1)	±0.001/±0.001/±0.001	0.0002	±0.0002	100-0	1.8 or less
2506A	**2506AB**	0.0005	0.125 (0.05)	±0.0005/±0.0005/—	0.00016	±0.0001	±0-50	1.8 or less
2507A	**2507AB**	0.0005	0.125 (0.05)	±0.0005/±0.0005/—	0.00016	±0.0001	0-25-0	1.8 or less
2514A	**2514AB**	0.0005	0.5 (0.05)	±0.0005/±0.0005/±0.0015	0.00016	±0.0001	±0-50	1.8 or less
2922A	**2922AB**	0.0005	0.125 (0.05)	±0.0005/±0.0005/—	0.00016	±0.0001	0-25-0	1.8 or less
2356A-10	**2356AB-10**	0.0001	0.25 (0.01)	±0.0002/±0.0002/±0.0003/ ±0.0004 (First 20rev)/ ±0.0005 (Over 20rev)	0.0001	±0.00003	0-10	2.0 or less
2358A-10	**2358AB-10**	0.0001	0.5 (0.01)	±0.0002/±0.0002/±0.0003/ ±0.0004 (First 20rev)/ ±0.0008 (Over 20rev)	0.00015	±0.00003	0-10	2.0 or less
2802A-10	**2802AB-10**	0.0001	0.025 (0.01)	±0.0001/±0.0001/—	0.0001	±0.00003	0-10	2.0 or less
2803A-10	**2803AB-10**	0.0001	0.025 (0.01)	±0.0001/±0.0001/—	0.0001	±0.00003	0-5-0	2.0 or less
2804A-10	**2804AB-10**	0.0001	0.05 (0.01)	±0.0001/±0.0001/±0.0002	0.0001	±0.00003	0-10	2.0 or less
2805A-10	**2805AB-10**	0.0001	0.05 (0.01)	±0.0001/±0.0001/±0.0002	0.0001	±0.00003	0-5-0	2.0 or less
2905A-10	**2905AB-10**	0.0001	0.05 (0.01)	±0.0001/±0.0001/±0.0002	0.0001	±0.00003	10-0	2.0 or less
2923A-10	**2923AB-10**	0.0001	0.05 (0.01)	±0.0001/±0.0001/±0.0002	0.0001	±0.00003	0-5-0	2.0 or less

2358A-10

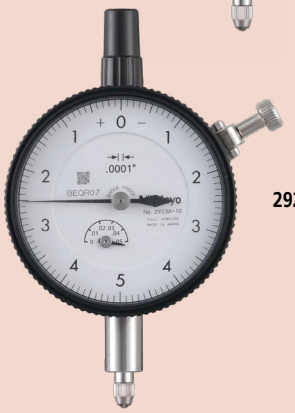

2923A-10

FEATURES

Inch

Order No. w/lug	Order No. Flat-back						
2414A	**2414AB**				✔		✔
2415A	**2415AB**					✔	✔
2914A	**2914AB**		✔				✔
2506A	**2506AB**				✔		✔
2507A	**2507AB**					✔	✔
2514A	**2514AB**				✔		✔
2922A	**2922AB**		✔			✔	✔
2356A-10	**2356AB-10**			✔	✔		✔
2358A-10	**2358AB-10**			✔	✔		✔
2802A-10	**2802AB-10**	✔		✔	✔		
2803A-10	**2803AB-10**	✔		✔		✔	
2804A-10	**2804AB-10**	✔		✔	✔		
2805A-10	**2805AB-10**	✔		✔		✔	
2905A-10	**2905AB-10**	✔	✔	✔			
2923A-10	**2923AB-10**	✔		✔		✔	

Optional Accessories

- Limit hand (2 pcs.): **21AZB195**

- Bezel clamp: **21AZB148** (for metric type)
  21RZA065* (for inch type)
  *Included with ANSI/AGD models

21AZB148

SERIES 2 — Standard Type, Inch Reading

Optional Accessories

- Limit hand (2 pcs.): **21AZB195**

- Bezel clamp: **21AZB148** (for metric type)
  21RZA065* (for inch type)
  *Included with ANSI/AGD models

21AZB148

DIMENSIONS

ANSI / AGD Type

Unit: in

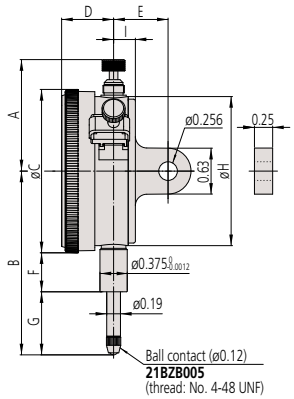

Order No.	A	B	C	D	E	F	G	H	I	Mass (g)	
										w/lug	Flat-back
2414A	1.53	2.52	2.24	0.71	3/4	0.54	0.87	2.05	0.30	164	139
2415A	1.53	2.52	2.24	0.71	3/4	0.54	0.87	2.05	0.30	164	139
2914A	1.53	2.52	2.24	0.71	3/4	0.54	0.87	2.05	0.30	164	139
2506A	1.86	2.14	2.24	0.71	3/4	0.54	0.48	2.05	0.30	164	139
2507A	1.86	2.14	2.24	0.71	3/4	0.54	0.48	2.05	0.30	164	139
2514A	1.53	2.52	2.24	0.71	3/4	0.54	0.87	2.05	0.30	164	139
2922A	1.86	2.14	2.24	0.71	3/4	0.54	0.48	2.05	0.30	164	139
2356A-10	1.86	2.25	2.24	0.71	3/4	0.54	0.59	2.05	0.30	163	138
2358A-10	1.53	2.50	2.24	0.71	3/4	0.54	0.85	2.05	0.30	164	139
2802A-10	1.86	2.02	2.24	0.71	3/4	0.54	0.37	2.05	0.30	164	139
2803A-10	1.86	2.02	2.24	0.71	3/4	0.54	0.37	2.05	0.30	164	139
2804A-10	1.86	2.04	2.24	0.71	3/4	0.54	0.38	2.05	0.30	166	141
2805A-10	1.86	2.04	2.24	0.71	3/4	0.54	0.38	2.05	0.30	166	141
2905A-10	1.86	2.04	2.24	0.71	3/4	0.54	0.38	2.05	0.30	164	139
2923A-10	1.86	2.04	2.24	0.71	3/4	0.54	0.38	2.05	0.30	164	139

Mitutoyo
Need Calibration?

Dial Indicators

SERIES 2 — Standard One Revolution Type for Error-Free Reading

- The one revolution dial indicator prevents the possibility of reading errors.
- Proprietary Mitutoyo shock-proof mechanism is incorporated, providing improved resistance to shock due to sudden spindle retraction caused by impact.
- The indicator is highly durable thanks to its oil- and water-tight design, quenched hardened stainless-steel, carbide contact point, and a grand gear made of wear- and deformation-resistant material.
- Application of an anti-reflective and hard surface coating improves scale visibility along with scratch and chemical resistance.
- The red dead zone in the middle of the dial face is separated from the bezel and doesn't cover the graduations. Therefore, users can always see the range where accuracy is not guaranteed even if the bezel is rotated.

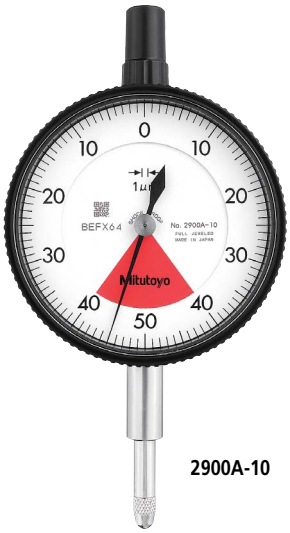

2900A-10

One revolution type Back Plunger dial gages are also available. (Refer to pages F-58 to F-59 for details.)

2990A-10

Optional Accessories

- Limit hand (2 pcs.): **21AZB195**

- Bezel clamp: **21AZB148** (for metric type)
  21RZA065* (for inch type)
  *Included with ANSI/AGD models

21AZB148

F

SPECIFICATIONS

Inch Stem ø3/8", #4-48 UNF — ANSI/AGD type / ISO/JIS type

Order No. w/lug	Order No. Flat-back	Graduation (in)	Range (range/rev) (in)	Accuracy (in) First 1 Rev/2.5 Rev/10 Rev	Accuracy (in) Retrace	Repeat-ability (in)	Dial reading	Measuring force (N)
2909A-62	**2909AB-62**	0.0005	0.04/0.05	±0.0005/—/—	0.00016	±0.0001	20-0-20	2.5 or less
2910A-10	**2910AB-10**	0.0001	0.008/0.01	±0.0001/—/—	0.0001	±0.00003	4-0-4	1.8 or less

Metric Stem ø8mm, M2.5x0.45 Thread

Order No. w/lug	Order No. Flat-back	Graduation (mm)	Range (range/rev) (mm)	Accuracy (µm) 1/10 Rev	Accuracy (µm) 1/2 Rev	Accuracy (µm) 1 Rev	Accuracy (µm) Measuring range	Hysteresis	Repeat-ability	Dial reading	Measuring force (N)
2928A	**2928AB**	0.1	4 (5)	20	—	—	40	20	20	2-0-2	1.4 or less
2929A	**2929AB**	0.01	0.8 (1)	5	—	—	8	3	3	40-0-40	1.4 or less
2929A-62	**2929AB-62**	0.01	0.8 (1)	5	—	—	8	3	3	40-0-40	2.0 or less
2959A	**2959AB**	0.01	1.6 (2)	5	—	—	10	3	3	80-0-80	1.4 or less
2900A-10	**2900AB-10**	0.001	0.08 (0.1)	2	—	—	3	2	0.5	40-0-40	1.5 or less
2900A-72	**2900AB-72**	0.001	0.08 (0.1)	2	—	—	3	2	0.5	40-0-40	2.0 or less
2901A-10	**2901AB-10**	0.001	0.16 (0.2)	2	—	—	4	2	0.5	80-0-80	1.5 or less

Special Specifications

Upon request, we can manufacture custom types with changed graduation numbers, graduation lines, dead zones, etc. Please contact your nearest M³ Solution Center for more information.

SERIES 2 — Standard One Revolution Type for Error-Free Reading

Optional Accessories

• Limit hand (2 pcs.): **21AZB195**

• Bezel clamp: **21AZB148** (for metric type)
21RZA065* (for inch type)
*Included with ANSI/AGD models

21AZB148

DIMENSIONS

ANSI / AGD Type

Unit: in

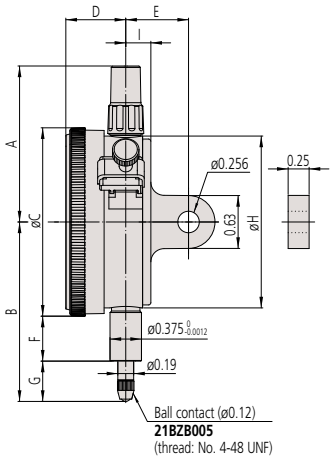

Order No.	A	B	C	D	E	F	G	H	I	Mass (g) w/lug	Mass (g) Flat-back
2909A-62	1.86	2.04	2.24	0.71	3/4	0.54	0.39	2.05	0.30	163	138
2910A-10	1.86	2.02	2.24	0.71	3/4	0.54	0.36	2.05	0.30	164	139

Note: Refer to pages F-63 to F-68 for details of contact points.

ISO / JIS Type

Unit: mm

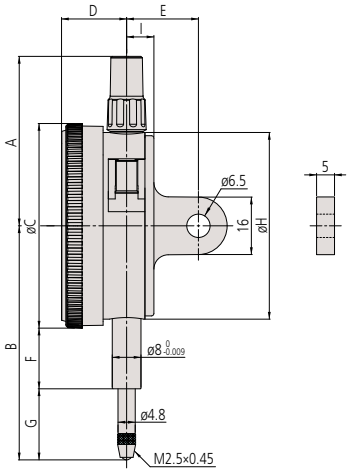

Order No.	A	B	C	D	E	F	G	H	I	Mass (g) w/lug	Mass (g) Flat-back
2928A	47.2	65.2	57	18.1	20	16.9	19.8	52	7.6	145	136
2929A	47.2	65.2	57	18.1	20	16.9	19.8	52	7.6	145	136
2929A-62	47.2	65.2	57	18.1	20	16.9	19.8	52	7.6	145	136
2959A	47.2	65.2	57	18.1	20	16.9	19.8	52	7.6	145	136
2900A-10	47.2	66	57	18.1	20	16.9	20.6	52	7.6	149	140
2900A-72	47.2	66	57	18.1	20	16.9	20.6	52	7.6	149	140
2901A-10	47.2	66.1	57	18.1	20	16.9	20.7	52	7.6	149	140

Note: Refer to pages F-63 to F-68 for details of contact points.

Find Training

Dial Indicators

Balanced scale

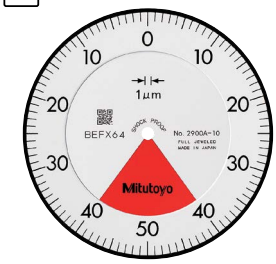

Graduation: 0.001 mm,
Measuring range: 0.08 mm

2900A-10
- One revolution
- Shockproof
- Jeweled bearing

2900A-72
- One revolution
- Shockproof
- Dustproof
- Jeweled bearing

Balanced scale

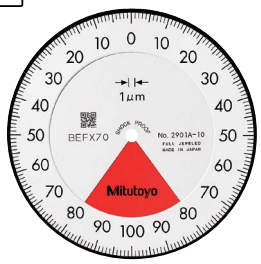

Graduation: 0.001 mm,
Measuring range: 0.16 mm

2901A-10
- One revolution
- Shockproof
- Jeweled bearing

Balanced scale

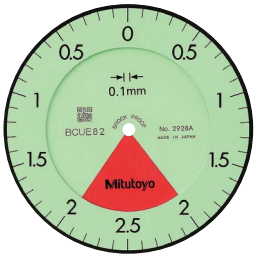

Graduation: 0.1 mm,
Measuring range: 4 mm

2928A
- One revolution
- Shockproof

Balanced scale

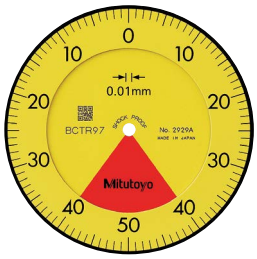

Graduation: 0.01 mm,
Measuring range: 0.8 mm

2929A
- One revolution
- Shockproof

2929A-62
- One revolution
- Shockproof
- Dustproof

Balanced scale

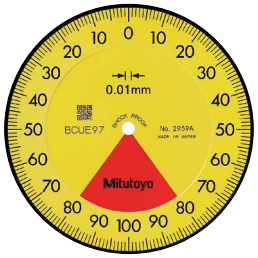

Graduation: 0.01 mm,
Measuring range: 1.6 mm

2959A
- One revolution
- Shockproof

FEATURES

Inch ANSI/AGD type ISO/JIS type

Order No. w/lug	Order No. Flat-back						
2909A-62	2909AB-62	✔	✔	✔		✔	
2910A-10	2910AB-10	✔	✔	✔			✔

Metric

Order No. w/lug	Order No. Flat-back						
2928A	2928AB	✔	✔	✔			
2929A	2929AB	✔	✔	✔			
2929A-62	2929AB-62	✔	✔	✔		✔	
2959A	2959AB	✔	✔	✔			
2900A-10	2900AB-10	✔	✔	✔			✔
2900A-72	2900AB-72	✔	✔	✔		✔	✔
2901A-10	2901AB-10	✔	✔	✔			✔

Optional Accessories

- Limit hand (2 pcs.): **21AZB195**

- Bezel clamp: **21AZB148** (for metric type)
  21RZA065* (for inch type)
  *Included with ANSI/AGD models

21AZB148

Find a Distributor

SERIES 2 — Standard One Revolution Type for Error-free Reading, Water-Proof Type

- The one revolution dial indicator with improved water resistance prevents the possibility of reading errors.
- Proprietary Mitutoyo shock-proof mechanism is incorporated, providing improved resistance to shock due to sudden spindle retraction caused by impact.
- It is highly durable thanks to a hardened stainless-steel stem and spindle, carbide probe, and a large gear made of wear- and deformation-resistant materials.
- Application of an anti-reflective and hard surface coating improves scale visibility along with scratch and chemical resistance.
- The red dead zone in the middle of the dial face is separated from the bezel and doesn't cover the graduations. Therefore, users can always see the range where accuracy is not guaranteed even if the bezel is rotated.

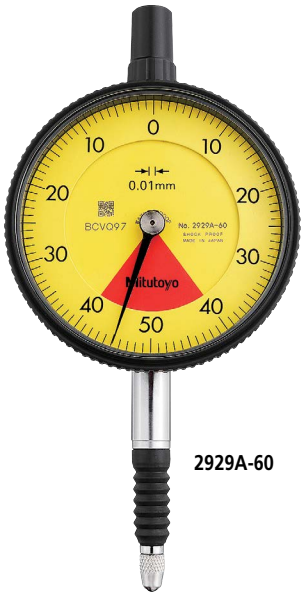

2929A-60

Optional Accessories

- Limit hand (2 pcs.): **21AZB195**

- Bezel clamp: **21AZB148** (for metric type)
  21RZA065* (for inch type)
  *Included with ANSI/AGD models

21AZB148

SPECIFICATIONS

Inch Stem ø3/8", #4-48 UNF — ANSI/AGD type / ISO/JIS type

Order No.		Graduation (in)	Range (range/rev) (in)	Accuracy (in)		Repeat-ability (in)	Dial reading	Measuring force (N)
w/lug	Flat-back			First 1 Rev/2.5 Rev/10 Rev	Retrace			
2910A-72	**2910AB-72**	0.0001	0.008/0.01	±0.0001/—/—	0.0001	±0.00003	4-0-4	2.5 or less

Metric Stem ø8mm, M2.5x0.45 Thread

Order No.		Graduation (mm)	Range (range/rev) (mm)	Accuracy (µm)				Hysteresis	Repeat-ability	Dial reading	Measuring force (N)
w/lug	Flat-back			1/10 Rev	1/2 Rev	1 Rev	Measuring range				
2929A-60	**2929AB-60**	0.01	0.8 (1)	5	—	—	8	3	3	40-0-40	2.0 or less
2900A-70	**2900AB-70**	0.001	0.08 (0.1)	2	—	—	3	2	0.5	40-0-40	2.0 or less

Special Specifications

Upon request, we can manufacture custom types with changed graduation numbers, graduation lines, dead zones, etc. Please contact your nearest M³ Solution Center for more information.

Dial Indicators

DIMENSIONS

ANSI / AGD Type

Unit: in

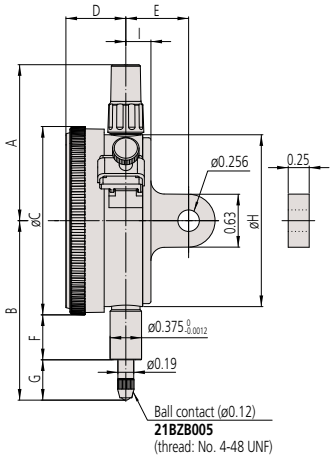

Order No.	A	B	C	D	E	F	G	H	I	Mass (g)	
										w/lug	Flat-back
2910A-72	1.86	2.02	2.24	0.71	3/4	0.54	0.36	2.05	0.30	150	141

Note: Refer to pages F-63 to F-68 for details of contact points.

ISO / JIS Type

Unit: mm

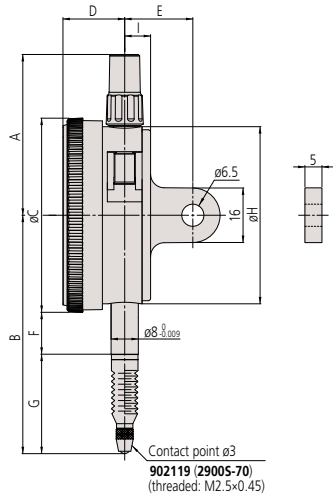

Order No.	A	B	C	D	E	F	G	H	I	Mass (g)	
										w/lug	Flat-back
2929A-60	47.2	70	57	18.1	20	12.3	29.2	52	7.6	146	137
2900A-70	47.2	67	57	18.1	20	12.3	26.2	52	7.6	150	141

Note: Refer to pages F-63 to F-68 for details of contact points.

Optional Accessories

- Limit hand (2 pcs.): **21AZB195**

- Bezel clamp: **21AZB148** (for metric type)
  21RZA065* (for inch type)
  *Included with ANSI/AGD models

21AZB148

Got Questions?

Optional Accessories

• Limit hand (2 pcs.): **21AZB195**

• Bezel clamp: **21AZB148** (for metric type)
21RZA065* (for inch type)
*Included with ANSI/AGD models

21AZB148

SERIES 2 — Standard One Revolution Type for Error-free Reading, Water-proof Type

Balanced scale

Graduation: 0.001 mm,
Measuring range: 0.08 mm

2900A-70
- **One revolution**
- **Shockproof**
- **Waterproof**
- **Jeweled bearing**

Balanced scale

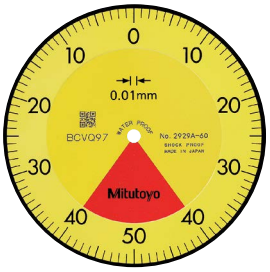

Graduation: 0.01 mm,
Measuring range: 0.8 mm

2929A-60
- **One revolution**
- **Shockproof**
- **Waterproof**

FEATURES

Inch ANSI/AGD type ISO/JIS type

Order No. w/lug	Order No. Flat-back						
2910A-72	2910AB-72	✔	✔	✔		✔	✔

Metric

Order No. w/lug	Order No. Flat-back						
2929A-60	2929AB-60	✔	✔	✔	✔		
2900A-70	2900AB-70	✔	✔	✔	✔		✔

F

Dial Indicators

SERIES 2 — Standard One Revolution Type for Error-Free Reading, Lightweight Type

- The one revolution dial indicator (lightweight type) prevents the possibility of reading errors.
- Proprietary Mitutoyo shock-proof mechanism is incorporated, providing improved resistance to shock due to sudden spindle retraction caused by impact.
- Lightweight type (70 g).
- It is highly durable thanks to a hardened stainless-steel stem and spindle, carbide probe, and a large gear made of wear- and deformation-resistant materials.
- Application of an anti-reflective and hard surface coating improves scale visibility along with scratch and chemical resistance.
- The red dead zone in the middle of the dial face is separated from the bezel and doesn't cover the graduations. Therefore, users can always see the range where accuracy is not guaranteed even if the bezel is rotated.

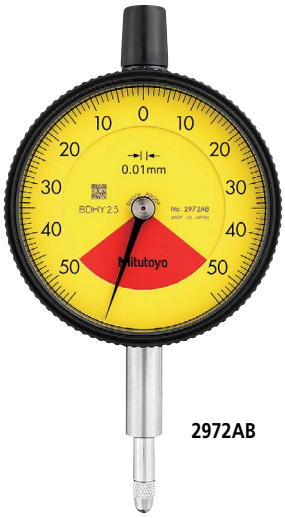

2972AB

F

Optional Accessory

- Limit hand (2 pcs.): **21AZB195**

SPECIFICATIONS

Inch Stem ø3/8", #4-48 UNF — ANSI/AGD type / ISO/JIS type

Order No. w/lug	Order No. Flat-back	Graduation (in)	Range (range/rev) (in)	Accuracy (in) First 1 Rev/2.5 Rev/10 Rev	Accuracy (in) Retrace	Repeat-ability (in)	Dial reading	Measuring force (N)
—	**2976AB**	0.0005	0.02 (0.028)	±0.0005/—/—	0.00016	±0.0001	10-0-10	1.4 or less
—	**2977AB**	0.0005	0.04 (0.055)	±0.0005/—/—	0.00016	±0.0001	20-0-20	1.4 or less
—	**2978AB**	0.001	0.06 (0.079)	±0.001/—/—	0.0002	±0.0002	30-0-30	1.4 or less

Metric Stem ø8mm, M2.5x0.45 Thread

Order No. w/lug	Order No. Flat-back	Graduation (mm)	Range (range/rev) (mm)	Accuracy (µm) 1/10 Rev	Accuracy (µm) 1/2 Rev	Accuracy (µm) 1 Rev	Accuracy (µm) Measuring range	Hysteresis	Repeat-ability	Dial reading	Measuring force (N)
—	**2971AB**	0.01	0.5 (0.7)	5	—	—	8	3	3	25-0-25	1.4 or less
—	**2972AB**	0.01	1 (1.4)	5	—	—	8	3	3	50-0-50	1.4 or less
—	**2973AB**	0.02	1.6 (2)	8	—	—	16	6	5	80-0-80	1.4 or less

Special Specifications

Upon request, we can manufacture custom types with changed graduation numbers, graduation lines, dead zones, etc. Please contact your nearest M³ Solution Center for more information.

SERIES 2 — Standard One Revolution Type for Error-Free Reading, Lightweight Type

Optional Accessory

• Limit hand (2 pcs.): **21AZB195**

DIMENSIONS

ANSI / AGD Type

Unit: in

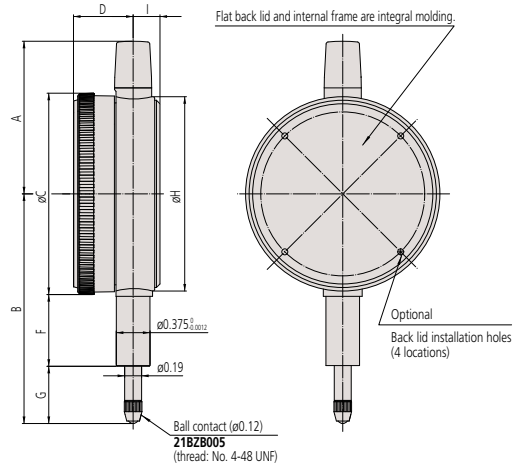

ISO / JIS Type

Unit: mm

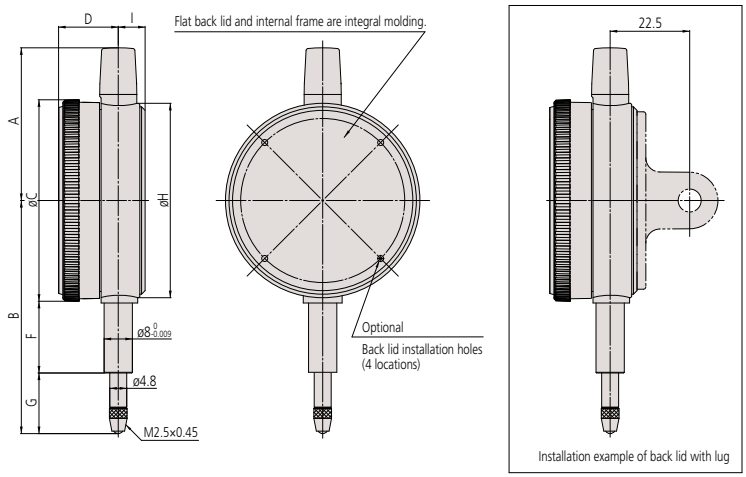

Note 1: When installing an optional back (refer to pages F-69 to F-70 for details) 4 retaining screws must also be obtained (**546666**: Self-tapping screw only for plastic).
Do not apply a tightening torque of more than 20 N•cm in order to avoid stripping the screw threads.
Note 2: An optional lifting lever, release or bezel clamp cannot be installed.

Inch

Order No.	A	B	C	D	F	G	H	I	Mass (g)
2976AB	1.70	2.55	2.24	0.67	0.80	0.63	2.17	0.30	70
2977AB	1.70	2.56	2.24	0.67	0.80	0.64	2.17	0.30	
2978AB	1.70	2.57	2.24	0.67	0.80	0.65	2.17	0.30	

Metric

Order No.	A	B	C	D	F	G	H	I	Mass (g)
2971AB	43.2	65.6	57	16.9	20.3	16.8	55	7.6	70
2972AB	43.2	66	57	16.9	20.3	17.2	55	7.6	
2973AB	43.2	66.3	57	16.9	20.3	17.5	55	7.6	

Note: Refer to pages F-63 to F-68 for details of contact points.

Talk to Sales

Dial Indicators

Balanced scale

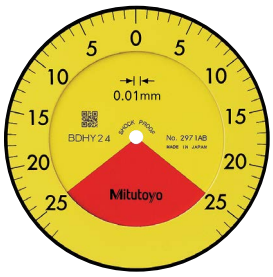

Graduation: 0.01 mm,
Measuring range: 0.5 mm

2971AB

- One revolution
- Shockproof
- Dustproof

Balanced scale

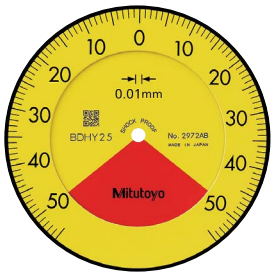

Graduation: 0.01 mm,
Measuring range: 1 mm

2972AB

- One revolution
- Shockproof
- Dustproof

Balanced scale

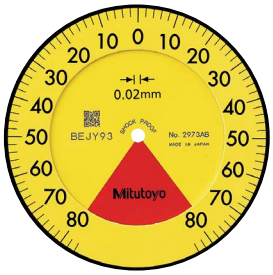

Graduation: 0.02 mm,
Measuring range: 1.6 mm

2973AB

- One revolution
- Shockproof
- Dustproof

FEATURES

Inch ANSI/AGD type ISO/JIS type

Order No.					
w/lug	Flat-back				
—	**2976AB**	✔	✔	✔	✔
—	**2977AB**	✔	✔	✔	✔
—	**2978AB**	✔	✔	✔	✔

Metric

Order No.					
w/lug	Flat-back				
—	**2971AB**	✔	✔	✔	✔
—	**2972AB**	✔	✔	✔	✔
—	**2973AB**	✔	✔	✔	✔

Optional Accessory

- Limit hand (2 pcs.): **21AZB195**

Need Repair?

F

Dial Indicators

SERIES 2 — Long Stroke Type

- Long stroke dial indicators with measuring range of 20 mm or more have a ø57 mm bezel.
- The indicator is highly durable thanks to its oil- and water-tight design, quenched hardened stainless-steel, carbide contact point, and a grand gear made of wear- and deformation-resistant material.
- Application of an anti-reflective and hard surface coating improves scale visibility along with scratch and chemical resistance.
- The lifting lever (optional) cannot be used with models that are water-proof or which have a measurement range of 30 mm.

Optional Accessory

- Limit hand (2 pcs.): **21AZB195**

SPECIFICATIONS

Inch Stem ø3/8", #4-48 UNF ANSI/AGD type ISO/JIS type

Order No. w/lug	Order No. Flat-back	Graduation (in)	Range (range/rev) (in)	Accuracy (in) First 1 Rev/2.5 Rev/10 Rev	Accuracy (in) Retrace	Repeat-ability (in)	Dial reading	Measuring force (N)
2416A	**2416AB**	0.001	1 (0.1)	±0.001/±0.001/±0.002	0.0002	±0.0002	±0-100	1.8 or less
2416A-06*	**2416AB-06***	0.001	1 (0.1)	±0.001/±0.001/±0.002	0.0002	±0.0002	±0-100	1.8 or less
2416A-10	**2416AB-10**	0.001	1 (0.1)	±0.001/±0.001/±0.002	0.0002	±0.0002	±0-100	1.8 or less
2417A	**2417AB**	0.001	1 (0.1)	±0.001/±0.001/±0.002	0.0002	±0.0002	0-50-0	1.8 or less
2424A-19	**2424AB-19**	0.001	2 (0.1)	±0.001/±0.001/±0.002/±0.003 (First 20 Rev)	0.00033	±0.0002	±0-100	2.5 or less
2776A	**2776AB**	0.0005	1 (0.05)	±0.0005/±0.0005/±0.0015/±0.002 (First 20 Rev)	0.0002	±0.0001	±0-50	2.5 or less
2904A	**2904AB**	0.001	1 (0.1)	±0.001/±0.001/±0.002	0.0002	±0.0002	100-0	1.8 or less

*Black Dial Face

Metric Stem ø8mm, M2.5x0.45 Thread

Order No. w/lug	Order No. Flat-back	Graduation (mm)	Range (range/rev) (mm)	Accuracy (µm) 1/10 Rev	Accuracy (µm) 1/2 Rev	Accuracy (µm) 1 Rev	Accuracy (µm) Measuring range	Hysteresis	Repeat-ability	Dial reading	Measuring force (N)
2050A	**2050AB**	0.01	20 (1)	8	10	15	20	5	4	±0-100	2.0 or less
2050A-60*	**2050AB-60***	0.01	20 (1)	8	10	15	20	5	4	±0-100	2.5 or less
2050A-19	**2050AB-19**	0.01	20 (1)	8	10	15	20	5	4	±0-100	2.0 or less
2320A-10	**2320AB-10**	0.01	20 (1)	8	10	15	20	5	4	±0-100	2.0 or less
2052A	**2052AB**	0.01	30 (1)	10	12	15	25	7	5	±0-100	2.5 or less
2052A-19	**2052AB-19**	0.01	30 (1)	10	12	15	25	7	5	±0-100	2.5 or less
2330A-10	**2330AB-10**	0.01	30 (1)	10	12	15	25	7	5	±0-100	2.5 or less
2952A	**2952AB**	0.01	30 (1)	10	12	15	25	7	5	100-0	2.5 or less

* **2050A-60** and **2050AB-60** are water-proof types that use a rubber bellows to cover the spindle. Note that the outer diameter of the bellows (ø9.5) is larger than that of the stem (ø8).

Dial Indicators

DIMENSIONS

ANSI / AGD Type

Unit: in

2424A-19

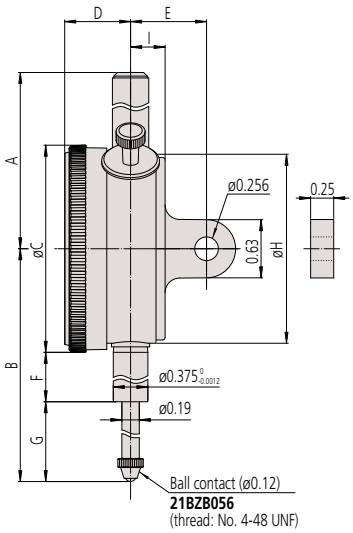

Order No.	A	B	C	D	E	F	G	H	I	Mass (g) w/lug	Mass (g) Flat-back
2416A	1.53	3.02	2.24	0.71	3/4	0.54	1.37	2.05	0.30	164	139
2416A-06	1.53	3.02	2.24	0.71	3/4	0.54	1.37	2.05	0.30	164	139
2416A-10	1.53	3.02	2.24	0.71	3/4	0.54	1.37	2.05	0.30	164	139
2417A	1.53	3.02	2.24	0.71	3/4	0.54	1.37	2.05	0.30	164	139
2424A-19	4.67	5.61	2.24	0.71	5/6	2.14	2.35	2.05	0.37	248	239
2776A	1.53	3.02	2.24	0.71	3/4	0.54	1.37	2.05	0.30	164	139
2904A	1.53	3.02	2.24	0.71	3/4	0.54	1.37	2.05	0.30	164	139

Note: Refer to pages F-63 to F-68 for details of contact points.

ISO / JIS Type

Unit: mm

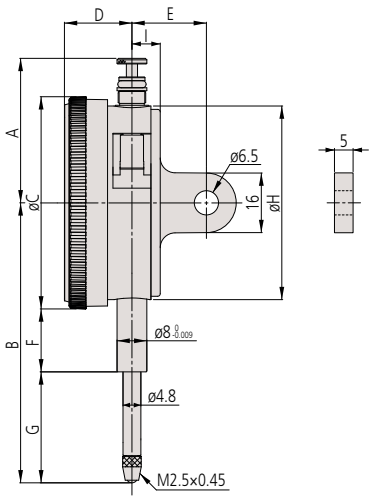

2050A-60

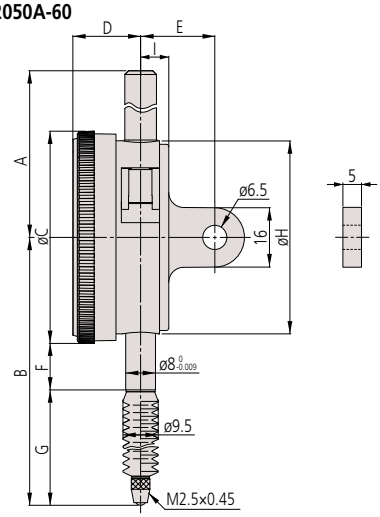

Order No.	A	B	C	D	E	F	G	H	I	Mass (g) w/lug	Mass (g) Flat-back
2050A	38.5	75.2	57	18.1	20	16.9	29.8	52	7.6	149	140
2050A-60	58.2	87.2	57	18.1	20	12.3	46.4	52	7.6	155	146
2050A-19	38.5	75.2	57	18.1	20	16.9	29.8	52	7.6	149	140
2320A-10	38.5	75.2	57	18.1	20	16.9	29.8	52	7.6	150	141
2052A	38.5	88.7	57	18.1	20	16.9	43.3	52	7.6	152	143
2052A-19	38.5	88.7	57	18.1	20	16.9	43.3	52	7.6	152	143
2330A-10	38.5	88.7	57	18.1	20	16.9	43.3	52	7.6	153	144
2952A	38.5	88.7	57	18.1	20	16.9	43.3	52	7.6	152	143

Note: Refer to pages F-63 to F-68 for details of contact points.

Optional Accessories

- Limit hand (2 pcs.): **21AZB195**

- Bezel clamp: **21AZB148** (for metric type)
  21RZA065* (for inch type)
  21RZA067 (included with **2424A(B)-19**)
  *Included with ANSI/AGD models

21AZB148

Where to Buy

F

Optional Accessory

• Limit hand (2 pcs.): **21AZB195**

SERIES 2 — Long Stroke Type

Continuous scale

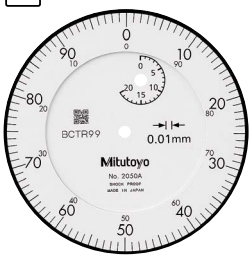

Graduation: 0.01 mm,
Measuring range: 20 mm

2050A
- With damper at lowest rest point

2050A-19
- Shockproof
- Jeweled bearing
- With damper at lowest rest point

2050A-60
- Waterproof

Continuous scale

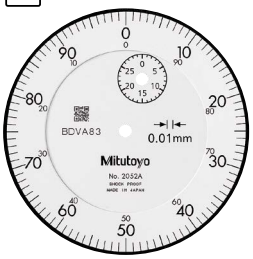

Graduation: 0.01 mm,
Measuring range: 30 mm

2052A
- With damper at lowest rest point

2052A-19
- Shockproof
- Jeweled bearing
- With damper at lowest rest point

Continuous scale

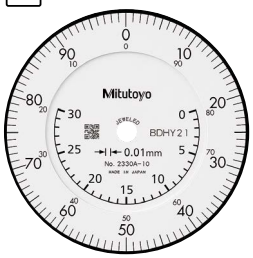

Graduation: 0.01 mm,
Measuring range: 30 mm

2330A-10
- With coaxial revolution counter
- With damper at lowest rest point
- Jeweled bearing

Continuous scale

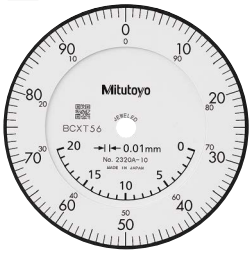

Graduation: 0.01 mm,
Measuring range: 20 mm

2320A-10
- With coaxial revolution counter
- With damper at lowest rest point
- Jeweled bearing

Reverse reading

Graduation: 0.01 mm,
Measuring range: 30 mm

2952A
- With damper at lowest rest point

FEATURES

Inch — ANSI/AGD type / ISO/JIS type

Order No. w/lug	Order No. Flat-back							
2416A	2416AB	✔						
2416A-06	2416AB-06	✔						
2416A-10	2416AB-10	✔				✔		
2417A	2417AB		✔					
2424A-19	2424AB-19	✔		✔		✔		✔
2776A	2776AB	✔						
2904A	2904AB				✔			

Metric

Order No. w/lug	Order No. Flat-back								
2050A	2050AB	✔					✔		
2050A-60	2050AB-60	✔				✔			
2050A-19	2050AB-19	✔			✔		✔	✔	
2320A-10	2320AB-10	✔					✔	✔	✔
2052A	2052AB	✔					✔		
2052A-19	2052AB-19	✔			✔		✔	✔	
2330A-10	2330AB-10	✔					✔	✔	✔
2952A	2952AB			✔			✔		

F

Dial Indicators

Metric Dial Indicators — ANSI / AGD Type

SPECIFICATIONS

Metric SERIES **1** Stem ø3/8", #4-48 UNF ☐ ANSI/AGD type

Order No. w/lug	Order No. Flat-back	Graduation (mm)	Range (range/rev) (mm)	Accuracy (µm) First 1 Rev/2.5 Rev/10 Rev	Accuracy (µm) Retrace	Repeat-ability (µm)	Dial reading	Measuring force (N)
1230A-01	**1230AB-01**	0.01	2.5 (1)	±10/±10/—	3	±2	0-100	1.4 or less
1231A-01	**1231AB-01**	0.01	2.5 (1)	±10/±10/—	3	±2	0-50-0	1.4 or less
1044A-01	**1044AB-01**	0.01	5 (1)	±10/±10/±13	3	±3	±0-100	1.4 or less
1045A-01	**1045AB-01**	0.01	5 (1)	±10/±10/±13	3	±3	0-50-0	1.4 or less
1010A-11	**1010AB-11**	0.002	0.5 (0.2)	±2/±2/—	2	±1	0-20	1.5 or less
1011A-11	**1011AB-11**	0.002	0.5 (0.2)	±2/±2/—	2	±1	0-10-0	1.5 or less

Metric SERIES **2** Stem ø3/8", #4-48 UNF

Order No. w/lug	Order No. Flat-back	Graduation (mm)	Range (range/rev) (mm)	Accuracy (µm) First 1 Rev/2.5 Rev/10 Rev	Accuracy (µm) Retrace	Repeat-ability (µm)	Dial reading	Measuring force (N)
2231A-01	**2231AB-01**	0.01	2.5 (1)	±10/±10/—	3	±3	0-50-0	1.4 or less
2046A-01	**2046AB-01**	0.01	10 (1)	±10/±10/±13	3	±3	±0-100	1.4 or less
2046A-11	**2046AB-11**	0.01	10 (1)	±10/±10/±13	3	±3	±0-100	1.4 or less
2047A-01	**2047AB-01**	0.01	10 (1)	±10/±10/±13	3	±3	0-50-0	1.4 or less
2047A-11	**2047AB-11**	0.01	10 (1)	±10/±10/±13	3	±3	0-50-0	1.4 or less
2902A-01	**2902AB-01**	0.01	10 (1)	±10/±10/±13	3	±3	100-0	1.4 or less
2050A-01	**2050AB-01**	0.01	20 (1)	±10/±10/±15/±20 (20 Rev)	4	±3	±0-100	2.0 or less
2056A-01	**2056AB-01**	0.01	25 (1)	±10/±10/±15/±20 (20 Rev)/ ±25 (Over 20 Rev)	4	±3	±0-100	2.5 or less
2109A-11	**2109AB-11**	0.001	1 (0.2)	±3/±3/±4	2	±0.3	0-10-0	1.5 or less
2119A-11	**2119AB-11**	0.001	5 (0.2)	±7/±7/±8/±10 (20 Rev)/ ±10 (Over 20 Rev)	2.5	±0.3	0-10-0	1.5 or less

FEATURES

Metric ☐ ANSI/AGD type

Order No. w/lug	Order No. Flat-back							
1230A-01	**1230AB-01**							
1231A-01	**1231AB-01**							
1044A-01	**1044AB-01**							
1045A-01	**1045AB-01**							
1010A-11	**1010AB-11**				✔			✔
1011A-11	**1011AB-11**				✔			✔

Metric

Order No. w/lug	Order No. Flat-back									
2231A-01	**2231AB-01**									
2046A-01	**2046AB-01**									
2046A-11	**2046AB-11**				✔					
2047A-01	**2047AB-01**									
2047A-11	**2047AB-11**				✔					
2902A-01	**2902AB-01**									✔
2050A-01	**2050AB-01**									
2056A-01	**2056AB-01**									
2109A-11	**2109AB-11**				✔			✔		
2119A-11	**2119AB-11**				✔					

Optional Accessories

- Backs (See pages F-69 to F-70)
- Contact points (See pages F-63 to F-68)

1010AB-11

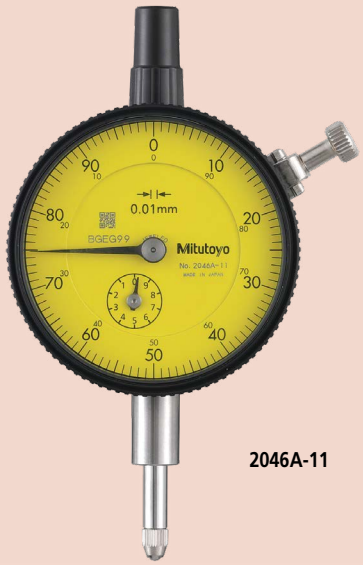

2046A-11

Get a Quote

F

SERIES 2 — Special Dial Indicators

Adjustable Hand Dial Indicator

- The hand position can be adjusted independently of the vertical movement of the spindle by rotating the top knob.

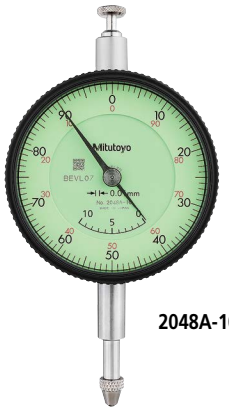

2048A-10

Optional Accessories

- Limit hand (2 pcs.), Bezel clamp
Refer to page F-27 for details.

SPECIFICATIONS

Metric

Order No.		Graduation (mm)	Range (range/rev) (mm)	Accuracy (µm)				Hysteresis	Repeat-ability	Dial reading	Measuring force (N)
w/lug	Flat-back			1/10 Rev	1/2 Rev	1 Rev	Measuring range				
2048A-10	**2048AB-10**	0.01	10 (1)	5	9	10	15	3	3	±0-100	1.4 or less

DIMENSIONS

ISO/JIS Type

Unit: mm

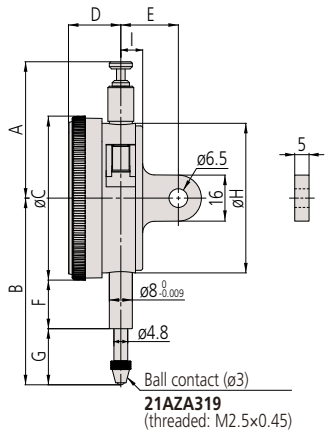

Order No.	A	B	C	D	E	F	G	H	I	Mass (g)	
										w/lug	Flat-back
2048A-10	47.4	64.9	57	18.1	20	16.9	19.5	52	7.6	144	135

Note: The shoulder on a contact point (standard accessory) acts as a stop to prevent spindle overrun that may otherwise damage the indicator. When replacing it with an optional contact point with a connector not exceeding ø7 mm in outside diameter, insert a washer (with ø7 mm outside diameter, ø3 mm inside diameter, and approximately 0.5 mm thickness) above the contact point.

Continuous scale

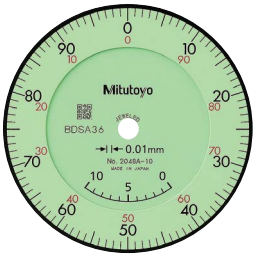

Graduation: 0.01 mm,
Measuring range: 10 mm

2048A-10

With coaxial revolution counter

Adjustable hand

Jeweled bearing

FEATURES

Metric

Order No.						
w/lug	Flat-back					
2048A-10	**2048AB-10**	✔	✔		✔	✔

Dial Indicators

SERIES 2 — Special Dial Indicators

- A mechanism holds the pointer and the spindle at the position of maximum depression and hence displays the maximum value.

  Note: Clearance of peak hold: Push the nut in the direction of the arrow indicated in the dimensional drawing for **2046A-80**.

2046A-80

SPECIFICATIONS

Metric Stem ø8mm, M2.5x0.45 Thread

ISO/JIS type

Order No.		Graduation (mm)	Range (range/rev) (mm)	Accuracy (µm)				Hysteresis	Repeat-ability	Dial reading	Measuring force (N)
w/lug	Flat-back			1/10 Rev	1/2 Rev	1 Rev	Measuring range				
2046A-80	**2046AB-80**	0.01	10 (1)	5	9	10	15	—	—	±0-100	5.0 or less

Note: Completed products inspection is performed in the vertical orientation (contact point downward) and the stated accuracy is guaranteed.

DIMENSIONS

ISO/JIS Type

Unit: mm

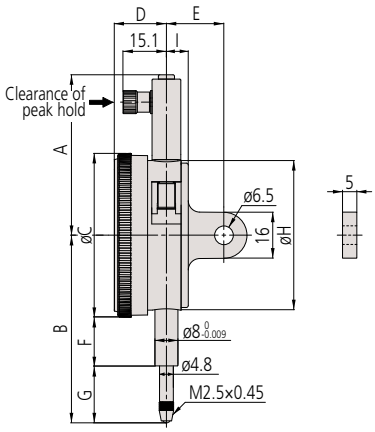

Order No.	A	B	C	D	E	F	G	H	I	Mass (g)	
										w/lug	Flat-back
2046A-80	55.8	65.2	57	18.1	20	16.9	19.8	52	7.6	158	149

Continuous scale

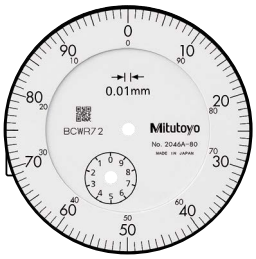

Graduation: 0.01 mm,
Measuring range: 10 mm

2046A-80

Peak retaining

FEATURES

Metric

Order No.					
w/lug	Flat-back				
2046A-80	**2046AB-80**	✔		✔	

Optional Accessories

- Limit hand (2 pcs.), Bezel clamp
  Refer to page F-27 for details.

Need Support?

Back Plunger Type Dial Indicators SERIES 2

- The one revolution dial indicator (back plunger type) prevents the possibility of reading errors.
- Back plunger type dial indicators are suitable for mounting onto leveling machine tool tables or inspection jigs, and for use in situations where standard dial indicators are difficult to read.
- Proprietry Mitutoyo shockproof mechanism provides excellent durability and shock resistance.
- Model **2990A-10** provides 0.001 mm graduation.
- The red dead zone in the middle of the dial face is separated from the bezel and doesn't cover the graduations. Therefore, users can always see the range where accuracy is not guaranteed even if the bezel is rotated.

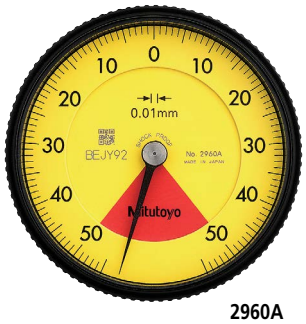

2960A

Holding Bar (Optional)

Order No.	øD (mm)	L (mm)
21AAA166	ø6	42
136567	ø6	81
124625	ø6.35	81
21AAA167	ø6.35	42
21AAA168	ø8	42
136568	ø8	81

Note: øD and L: detail shown in drawing below.

Optional Accessory

- Limit hand (2 pcs.)
  Refer to page F-41 for details.

Special Specifications

Upon request, we can manufacture custom types with changed graduation numbers, graduation lines, dead zones, etc. Please contact your nearest M³ Solution Center for more information.

SPECIFICATIONS

Inch Stem ø3/8", #4-48 UNF — ANSI/AGD type / ISO/JIS type

Order No.	Graduation (in)	Range (range/rev) (in)	Accuracy (in)		Repeatbility (in)	Dial reading	Measuring force (N)
			First 1 Rev/2.5 Rev/10 Rev	Retrace			
2961A	0.0005	0.04 (0.05)	±0.0005/—/—	0.00016	±0.0001	20-0-20	1.4 or less
2991A-10	0.0001	0.008 (0.01)	±0.0002/—/—	0.0001	±0.00005	4-0-4	1.5 or less

Metric Stem ø8mm, M2.5x0.45 Thread

Order No.	Graduation (mm)	Range (range/rev) (mm)	Accuracy (µm)				Hysteresis	Repeat-ability	Dial reading	Measuring force (N)
			1/10 Rev	1/2 Rev	1 Rev	Measuring range				
2960A	0.01	1 (1.27)	8	—	—	14	4	3	50-0-50	1.4 or less
2990A-10	0.001	0.1 (0.14)	2.5	—	—	5	2	1	50-0-50	1.5 or less

Note 1: The bezel clamp cannot be used.

DIMENSIONS

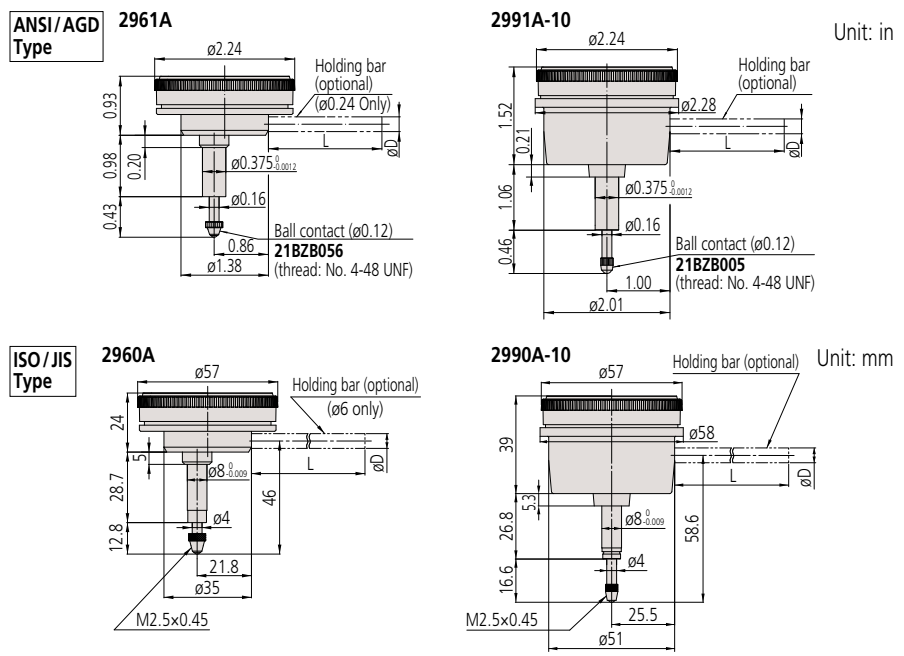

Note 1: The shoulder on a contact point (standard accessory) for **2960A** and **2961A** acts as a stop to prevent spindle overrun that may otherwise damage the indicator. When replacing it with an optional contact point with a connector not exceeding ø7 mm in outside diameter, insert a washer (with ø7 mm outside diameter, ø3 mm inside diameter, and approximately 0.5 mm thickness) above the contact point.
Note 2: Refer to pages F-63 to F-68 for details of contact points.

Dial Indicators

Balanced scale

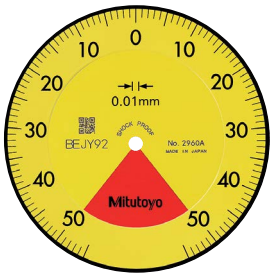

Graduation: 0.01 mm,
Measuring range: 1 mm

2960A
- One revolution
- Shockproof
- Back Plunger

Balanced scale

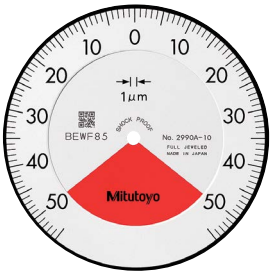

Graduation: 0.001 mm,
Measuring range: 1 mm

2990A-10
- One revolution
- Shockproof
- Back Plunger
- Jeweled bearing

F

FEATURES

Inch ANSI/AGD type ISO/JIS type

Order No.	Balanced scale	One revolution	Shockproof	Jeweled bearing	Back Plunger
2961A	✔	✔	✔		✔
2991A-10	✔	✔	✔	✔	✔

Metric

Order No.	Balanced scale	One revolution	Shockproof	Jeweled bearing	Back Plunger
2960A	✔	✔	✔		✔
2990A-10	✔	✔	✔	✔	✔

Need Service?

Optional Accessories

- Limit hand (2 pcs.), Bezel clamp
  Refer to page F-31 for details.

SERIES 3, 4 — Long Stroke Type, Large Diameter

- Dial indicators with a large-diameter dial face for easy reading.
- The indicator is highly durable thanks to its oil- and water-tight design, quenched hardened stainless-steel, carbide contact point, and a grand gear made of wear- and deformation-resistant material.
- Application of an anti-reflective and hard surface coating improves scale visibility along with scratch and chemical resistance.

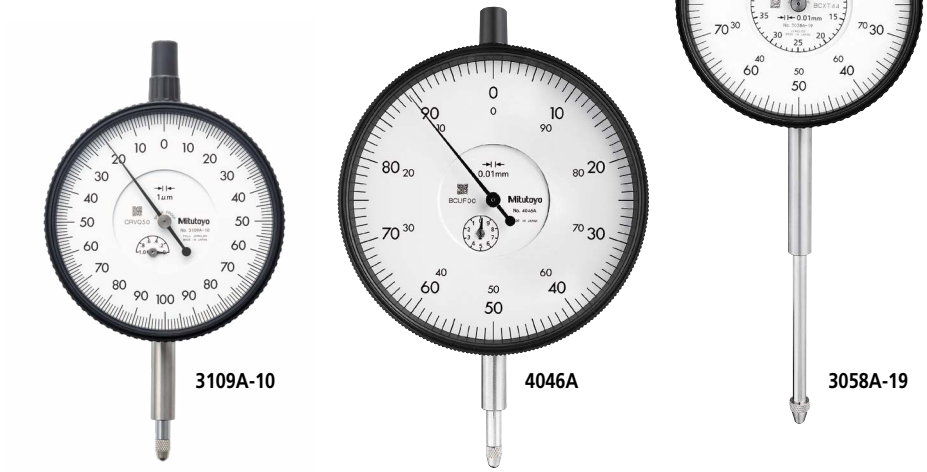

SPECIFICATIONS

Inch Stem ø3/8", #4-48 UNF — ANSI/AGD type / ISO/JIS type

Order No. w/lug	Order No. Flat-back	Graduation (in)	Range (range/rev) (in)	Accuracy*2 (in) First 1 Rev/2.5 Rev/10 Rev	Accuracy*2 (in) Retrace	Repeat-ability (in)	Dial reading	Measuring force (N)
3414A	3414AB	0.001	0.5 (0.1)	±0.001/±0.001/±0.001	0.0002	±0.0002	±0-100	1.8 or less
3415A	3415AB	0.001	0.5 (0.1)	±0.001/±0.001/±0.001	0.0002	±0.0002	0-50-0	1.8 or less
3416A	3416AB	0.001	1 (0.1)	±0.001/±0.001/±0.002	0.0002	±0.0002	±0-100	1.8 or less
3417A	3417AB	0.001	1 (0.1)	±0.001/±0.001/±0.002	0.0002	±0.0002	0-50-0	1.8 or less
3424A-19	3424AB-19	0.001	2 (0.1)	±0.001/±0.001/±0.002 /±0.003 (20 Rev)	0.00033	±0.0002	±0-100	3.0 or less
3426A-19*1	3426AB-19*1	0.001	3 (0.1)	±0.001/±0.001/±0.002/±0.003 (20 Rev)/±0.005 (Over 20 Rev)	0.00033	±0.0002	±0-100	3.0 or less
3428A-19*1	3428AB-19*1	0.001	4 (0.1)	±0.001/±0.001/±0.002/±0.003 (20 Rev)/±0.005 (Over 20 Rev)	0.00033	±0.0002	±0-100	3.5 or less
3802A-10	3802AB-10	0.0001	0.025 (0.01)	±0.0001/±0.0001/—	0.0001	±0.00003	0-10	2.0 or less
3803A-10	3803AB-10	0.0001	0.025 (0.01)	±0.0001/±0.0001/—	0.0001	0±.00003	0-5-0	2.0 or less
4887A-19*1	4887AB-19*1	0.001	3 (0.1)	±0.001/±0.001/±0.002/±0.003 (20 Rev)/±0.005 (Over 20 Rev)	0.00033	±0.0002	±0-100	3.0 or less

Metric Stem ø8mm, M2.5x0.45 Thread

Order No. w/lug	Order No. Flat-back	Graduation (mm)	Range (range/rev) (mm)	Accuracy (µm) 1/10 Rev	1/2 Rev	1 Rev	Measuring range	Hysteresis	Repeat-ability	Dial reading	Measuring force (N)
3046A	3046AB	0.01	10 (1)	5	9	10	15	3	3	±0-100	1.4 or less
3047A	3047AB	0.01	10 (1)	5	9	10	15	3	3	0-50-0	1.4 or less
3050A	3050AB	0.01	20 (1)	8	10	15	20	5	4	±0-100	2.0 or less
3052A-19	3052AB-19	0.01	30 (1)	10	12	15	25	7	5	±0-100	2.5 or less
3058A-19	3058AB-19	0.01	50 (1)	10	12	15	30	8	5	±0-100	3.0 or less
3060A-19*1	3060AB-19*1	0.01	80 (1)	12	17	20	45	9	5	±0-100	3.0 or less
3062A-19*1	3062AB-19*1	0.01	100 (1)	12	17	20	50	9	5	±0-100	3.5 or less
3109A-10	3109AB-10	0.001	1 (0.2)	2	3.5	4	5	2	0.5	0-100-0	1.5 or less
4046A	4046AB	0.01	10 (1)	5	9	10	15	3	3	±0-100	1.4 or less

*1 Use in a vertical orientation (contact point downward) for the long stroke model.

Dial Indicators

DIMENSIONS

ANSI / AGD Type

Unit: in

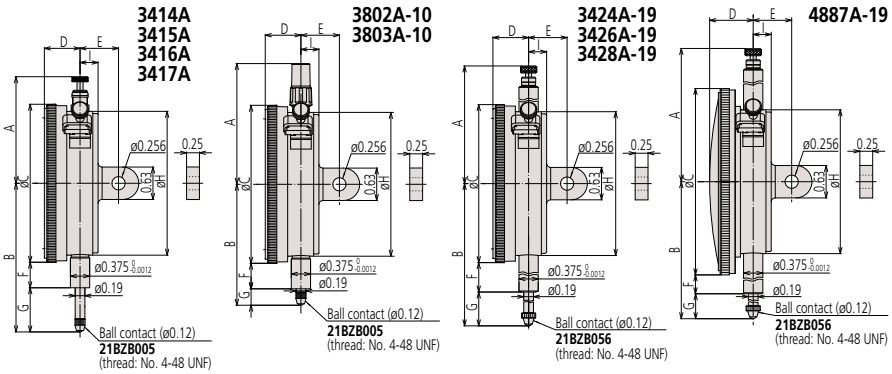

Order No.	A	B	C	D	E	F	G	H	I
3414A	2.07	2.89	3.07	0.70	3/4	0.50	0.86	2.80	0.35
3415A	2.07	2.89	3.07	0.70	3/4	0.50	0.86	2.80	0.35
3416A	2.07	3.39	3.07	0.70	3/4	0.50	1.36	2.80	0.35
3417A	2.07	3.39	3.07	0.70	3/4	0.50	1.36	2.80	0.35
3424A-19*	3.31	5.88	3.07	0.70	3/4	1.99	2.35	2.80	0.35
3426A-19*	4.84	7.80	3.07	0.70	3/4	2.91	3.35	2.80	0.35
3428A-19*	5.67	9.63	3.07	0.70	3/4	3.74	4.35	2.80	0.35
3802A-10	2.41	2.35	3.07	0.70	3/4	0.50	0.32	2.80	0.35
3803A-10	2.41	2.35	3.07	0.70	3/4	0.50	0.32	2.80	0.35
4887A-19*	4.84	7.80	3.62	0.85	3/4	2.63	3.35	2.80	0.35

* The shoulder on a contact point (standard accessory) acts as a stop to prevent spindle overrun that may otherwise damage the indicator. When replacing it with an optional contact point with a connector not exceeding ø7 mm in outside diameter, insert a washer (with ø7 mm outside diameter, ø3 mm inside diameter, and approximately 0.5 mm thickness) above the contact point.

Note: Refer to pages F-63 to F-68 for details of contact points.

ISO / JIS Type

Unit: mm

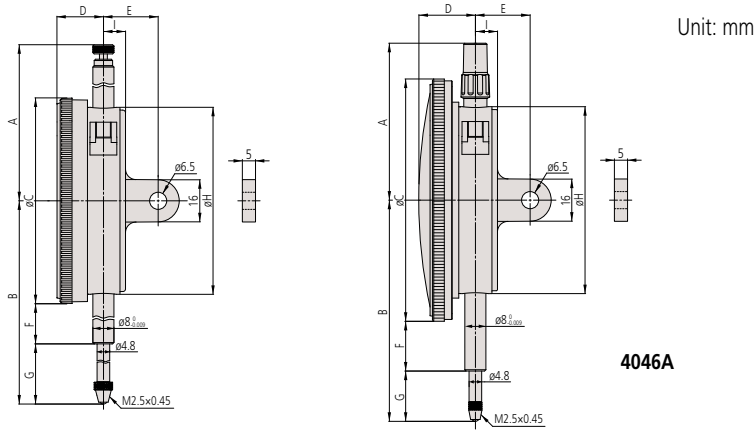

Order No.	A	B	C	D	E	F	G	H	I
3046A	59.6	75.5	78	17.7	21	15.9	20.6	71	9
3047A	59.6	75.5	78	17.7	21	15.9	20.6	71	9
3050A	52.6	94	78	17.7	21	25.9	29.1	71	9
3052A-19*	72.9	104.3	78	17.7	21	25.9	39.4	71	9
3058A-19*	81.9	142.3	78	17.7	21	43.9	59.4	71	9
3060A-19*	120.9	202.3	78	17.7	21	73.9	89.4	71	9
3062A-19*	141.9	243.3	78	17.7	21	94.9	109.4	71	9
3109A-10	59.6	79	78	17.7	21	25.9	14.1	71	9
4046A	59.6	84	92	21.5	21	18.9	19.1	71	9

* The shoulder on a contact point (standard accessory) acts as a stop to prevent spindle overrun that may otherwise damage the indicator. When replacing it with an optional contact point with a connector not exceeding ø7 mm in outside diameter, insert a washer (with ø7 mm outside diameter, ø3 mm inside diameter, and approximately 0.5 mm thickness) above the contact point.

Note: Refer to pages F-63 to F-68 for details of contact points.

Need Calibration?

SERIES 3, 4 — Long Stroke Type, Large Diameter

Continuous scale

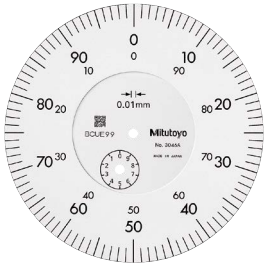

Graduation: 0.01 mm, Measuring range: 10 mm **3046A**

Balanced scale

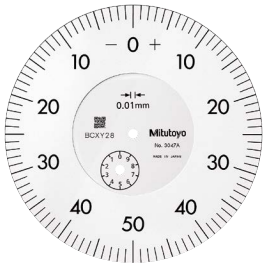

Graduation: 0.01 mm, Measuring range: 10 mm **3047A**

Continuous scale

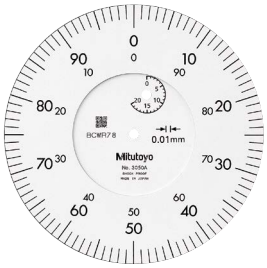

Graduation: 0.01 mm, Measuring range: 20 mm **3050A**

Continuous scale

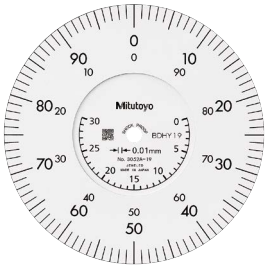

Graduation: 0.01 mm, Measuring range: 30 mm **3052A-19**

Continuous scale

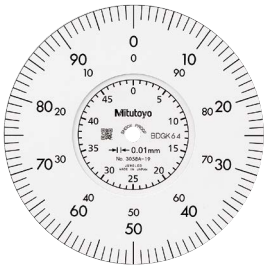

Graduation: 0.01 mm, Measuring range: 50 mm **3058A-19**

Continuous scale

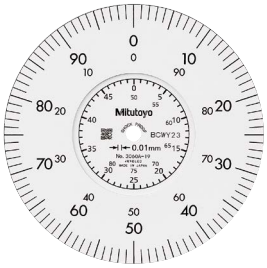

Graduation: 0.01 mm, Measuring range: 80 mm **3060A-19**

Continuous scale

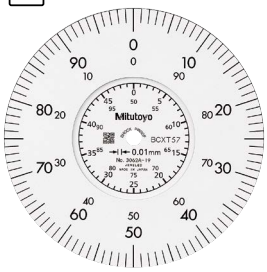

Graduation: 0.01 mm, Measuring range: 100 mm **3062A-19**

Balanced scale

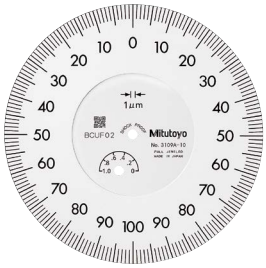

Graduation: 0.001 mm, Measuring range: 1 mm **3109A-10**

Continuous scale

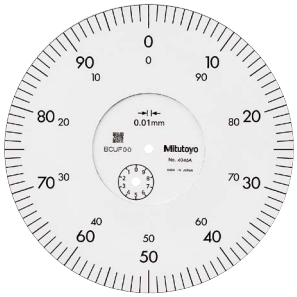

Graduation: 0.01 mm, Measuring range: 10 mm **4046A**

FEATURES

Inch — ANSI/AGD type

Order No. w/lug	Order No. Flat-back					
3414A	3414AB	✔				
3415A	3415AB		✔			
3416A	3416AB	✔				
3417A	3417AB		✔			
3424A-19	3424AB-19	✔		✔	✔	✔
3426A-19	3426AB-19	✔		✔	✔	✔
3428A-19	3428AB-19	✔		✔	✔	✔
3802A-10	3802AB-10	✔		✔	✔	
3803A-10	3803AB-10		✔	✔	✔	
4887A-19	4887AB-19	✔		✔	✔	✔

Metric — ISO/JIS type

Order No. w/lug	Order No. Flat-back						
3046A	3046AB	✔					
3047A	3047AB		✔				
3050A	3050AB	✔			✔		
3052A-19	3052AB-19	✔		✔		✔	✔
3058A-19	3058AB-19	✔		✔		✔	✔
3060A-19	3060AB-19	✔		✔		✔	✔
3062A-19	3062AB-19	✔		✔		✔	✔
3109A-10	3109AB-10		✔	✔		✔	
4046A	4046AB	✔					

Dial Indicators

Optional Accessories for Digimatic and Dial Indicators and Linear Gages

Contact Points, Extension Rod

- After replacement, it must be tightened firmly to prevent looseness during use (recommended tightening torque: 50 N·cm).
- Carbide and ruby contact points are highly resistant to wear.

Standard Contact Point

Unit: mm

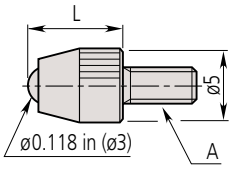

21BZB005

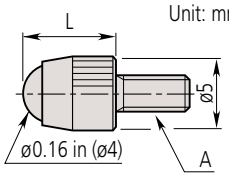

902018

F

A: 4-48UNF

L	Carbide	Sapphire	L	SR
.25"	**21BZB005**	—	—	—
.28"	—	—	—	**902018**
.3"	**131262**	**131263**	**131264**	—
.6"	**131265**	**131266**	**131267**	—
1"	**131268**	**131269**	**131270**	—

Unit: mm

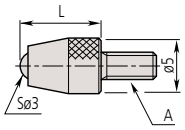

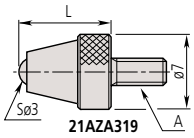

21AZA319

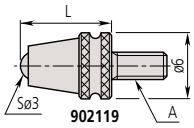

902119

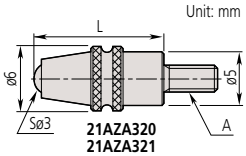

21AZA320
21AZA321

Note: Contact points for water-proof indicators are equipped with a groove to locate the rubber boot.

A: M2.5×0.45

Material / L (mm)	Carbide		Ruby	Plastic
	Without groove	With groove (water-proof type)	Without groove	Without groove
7.3	**901312**	—	**120047**	**901994**
8.3	**21AZA319**	**902119**	—	—
12.1	—	**21AZA320**	—	—
14	**21JAA225**	—	—	—
15	**120049**	—	**120051**	—
17	**21JAA224**	—	—	—
19.3	—	**21AZA321**	—	—
20	**137391**	—	**137392**	—
22	**21JAA226**	—	—	—
25	**120053**	—	**120055**	—
30	**21AAA252**	—	**21AAA253**	—

Find a Distributor

Shell Type Point (Hardened Steel)

Contact point with a large radius.
Optimal for use on flat surfaces.

101118

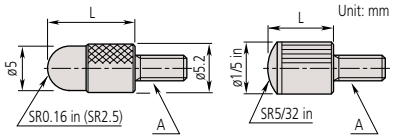

A: 4-48UNF

Order No.	L (in)
193697	3/32
101184	5/32
21AAA031	1/4
21AAA032	3/8
101185	1/2
21AAA033	5/8
101186	3/4
21AAA034	7/8
101187	1
21AAA035	1 1/4
21AAA036	1 1/2
21AAA037	1 3/4
21AAA038	2
21AAA039	2 1/4
21AAA040	2 1/2
21AAA041	2 3/4
21AAA042	3

A: M2.5×0.45

Order No.	L (mm)
101386	5
101118	10
137393	15
101387	20
101388	25
21AAA254	30

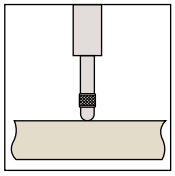

Ball Point (Hardened Steel)

Optimal for workpieces with deep indentations.

101122

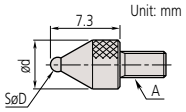

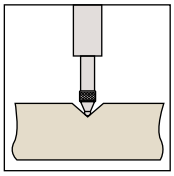

A: M2.5×0.45

Order No.	SøD (mm)	ød (mm)	Spherical tip material
21AAA349	1	5	Carbide
21AAA350	1.5	5	
101122	1.8	5	Hardened steel
21AAA351	2.5	5	Carbide
21AAA352	4	5	

Spherical Point (Hardened Steel)

A large radius makes this contact point optimal for use where the workpiece needs to slide from the side.

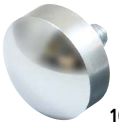

101119

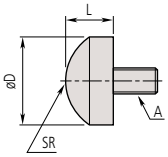

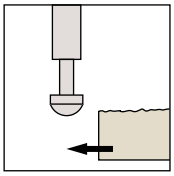

A: 4-48UNF

Order No.	øD (in)	L (in)	SR (in)
101205	1/2	1/8	0.35
101204	3/8	3/32	0.28

A: M2.5×0.45

Order No.	øD (mm)	L (mm)	SR (mm)
111460	5.5	3	5
125258	7.9	5	5
101119	10	5	7

Spherical Point (Carbide)

21AZB752

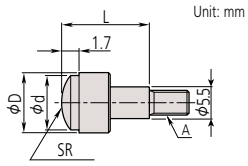

A: 4-48UNF

Order No.	øD (in)	ød (in)	L (in)	SR (in)
131273	ø.2	ø.17	.2	.2
131274	ø.27	ø.16	.4	.16
131275	ø.41	.4	.4	.4

A: M2.5×0.45

Order No.	øD	ød	L	SR
21AZB751	5.2	4.3	5	5
21AZB752	7.5	6.5	10	7
21AZB753	10.5	9.5	10	10

Dial Indicators

Flat Point

131365

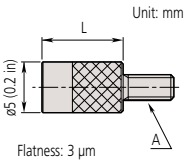

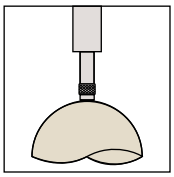

A: 4-48UNF

Order No.	L (in)
133017	5/16
21AAA043	1/2
21AAA044	3/4
21AAA045	1

A: M2.5×0.45

Order No.	L
131365	8
21AAB715	10

Material:
Hardened steel

101117

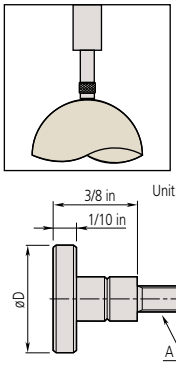

A: 4-48UNF

Order No.	øD (in)
101188	1/2
101189	3/8

A: M2.5×0.45

Order No.	øD
101117	10
21AAB711	15
21AAB712	20
21AAB713	25
21AAB714	30

Flat Point (Carbide)

21AZB758

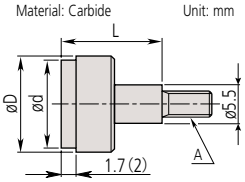

( ): For **21AZB757**

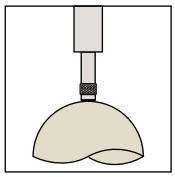

A: 4-48UNF

Order No.	D (in)	d (in)	L (in)
131259	Ø.2	Ø.17	.2
131260	Ø.27	Ø.25	.4
131261	Ø.41	Ø.37	.4

A: M2.5×0.45

Order No.	øD	ød	L
21AZB756	5.2	4.3*1	5
21AZB757	7	6.5*1	10
21AZB758	10.5	9.5*1	10
21AZB760	17	15*2	10
21AZB761	22	20*2	10
21AZB762	27	25*2	10
21AZB763	32	30*2	10

Flatness: *1: 3 µm, *2: 5 µm

21AZB754

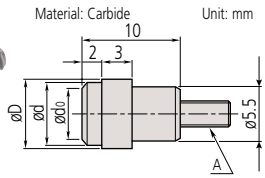

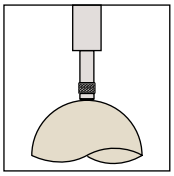

A: M2.5×0.45

Order No.	ød0	ød	øD
21AZB754	3	6.4	7
21AZB755	4.5	8	9

Flatness: 3 µm

21AZB759

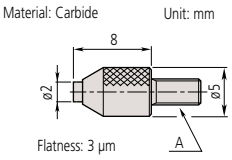

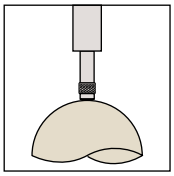

A: M2.5×0.45

Order No.
21AZB759

Conical Point

Used for positioning the measurement point. Since it can damage a workpiece easily, it is not suitable for use on soft materials.

101120

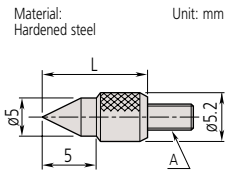

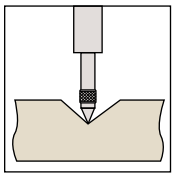

A: 4-48UNF

Order No.	Tip angle	L
101190	60°	1/2
101191	90°	1/4

101385

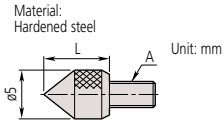

A: M2.5×0.45

Order No.	Tip angle	L
101120	60°	10
101385	90°	5

Got Questions?

Conical Point (Carbide)

21AZB764

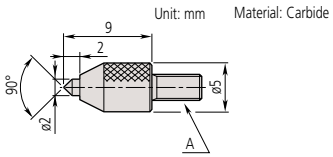

A: 4-48UNF

Order No.	L
131272	.08″

A: M2.5×0.45

Order No.
21AZB764

21AZB765

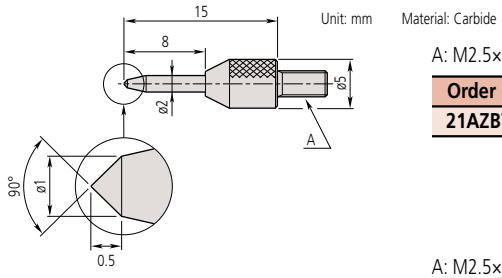

A: 4-48UNF

Order No.	L
131283	.3″

A: M2.5×0.45

Order No.
21AZB765

Needle Point

Suitable for probing the bottom of a groove or hole.

101121

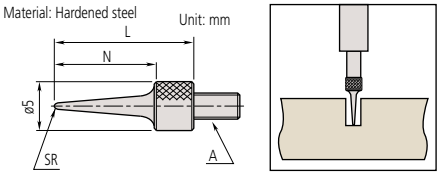

A: 4-48UNF

Order No.	L (in)	SR (in)
21AAA030	0.6	0.016
21AAA046	1	0.016
21AAA047	1 1/2	0.016
21AAA048	2	0.016

A: M2.5×0.45

Order No.	N	L	SR
101121	11	15	0.4
137413	13	17	0.2
21AAA255	21	25	0.4
21AAA256	31	35	0.4

Needle Point (Carbide)

137257

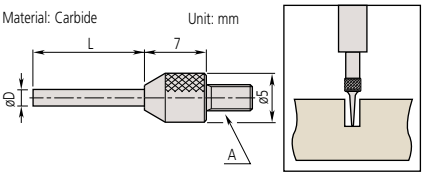

A: 4-48UNF

Order No.	D	L
131281	ø.018"	.12"
131280	ø.04"	.12"
131279	ø.06"	.5"
131271	ø.078"	.04"

A: M2.5×0.45

Order No.	øD	L
120066	0.45	3
21AAA329	0.45	5
120065	1	3
21AAA330	1	5
21AAA331	1	8
21AAA332	1	10
21AAA333	1	20
21AAA334	1	40
21AAA335	1.5	5
21AAA336	1.5	10
120064	1.5	13
21AAA337	1.5	20
21AAA338	1.5	40
137257	2	8
21AAA257	2	18
21AAA258	2	28
21AAA339	2	40

Blade Point (Carbide)

Suitable for measuring cylinders.

21AZB768

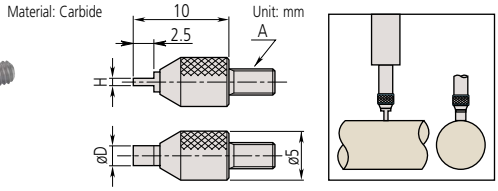

A: 4-48UNF

Order No.	D	L
131276	.08″	.016″
131277	.08″	.024″
131278	.16″	.04″

A: M2.5×0.45

Order No.	H	øD
21AZB767	0.4	2
21AZB768	0.6	2
21AZB769	1	4

Knife Edge Point (Carbide)

Suitable for measuring narrow groove diameter, etc.

21AZB766

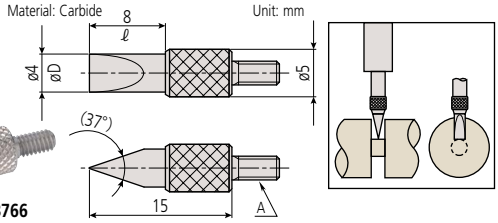

A: 4-48UNF

Order No.
131282

A: M2.5×0.45

Order No.
21AZB766

F

Mitutoyo

Dial Indicators

Optional Accessories for Digimatic and Dial Indicators and Linear Gages

Lever Point

Suitable for use* on perpendicular faces, such as those within mold cavities. Lever can be adjusted to the required angle.

* Perform measurement in the same posture and conditions as for the reference setting so that variation due to lever deflection is reduced. Gently bring the contact point into touch with the workpiece. Use a dial indicator with as small a measuring force as possible.

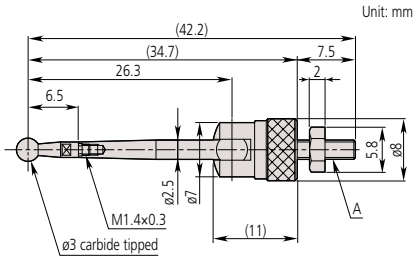

A: 4-48UNF

Order No.
900393

A: M2.5×0.45

Order No.
900391

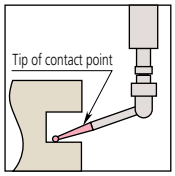

The tip of contact point is interchangeable.
Interchangeable contact points (optional)
ø1 mm contact point: **102824**
ø2 mm contact point: **102825**
ø3 mm contact point: **102826** (provided as standard)

Roller Point

Suitable for use on a moving workpiece surface, or where the workpiece needs to slide from the side.

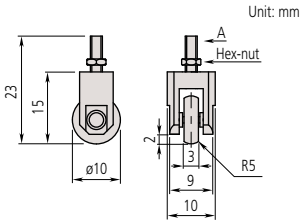

A: 4-48UNF

Order No.
901991

A: M2.5×0.45

Order No.
901954

Roller material: Hardened steel
Roller runout: 10 µm or better
Note 1: For a different roller diameter, contact your nearest M³ Solution Center.
Note 2: High-accuracy roller with 5 µm runout is also available. (Special order item)

Talk to Sales

Interchangeable Contact Point Set

This set consists of six types of popular contact points for extending the use of an indicator to many applications.

Set Order No. **7822**

M2.5×0.45

Order No.	Contact points included
7822	Set
131365	Flat Point (ø5 mm)
101117	Flat Point (ø10 mm)
101121	Needle Point
101119	Spherical Point
101118	Shell Type Point (R2.5×10)
101387	Shell Type Point (R2.5×20)

Extension Rod

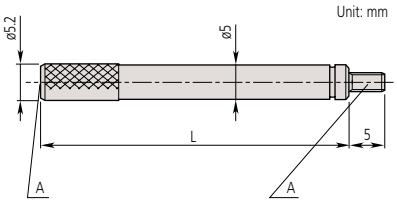

A: 4-48UNF

Order No.	L (in)
139167	1/2
301655	1
301657	2
301659	4

A: M2.5×0.45

Order No.	L
303611	10
21AAA259A	15
303612	20
21AAA259B	25
303613	30
21AAA259C	35
21AAA259D	40
21AAA259E	45
21AAA259F	50
21AAA259G	55
304146	60
21AAA259H	65
21AAA259J	70
21AAA259L	75
21AAA259M	80
304147	90
303614	100

Conversion Adapters

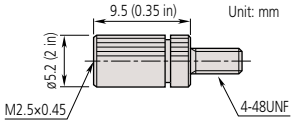

Order No.
21AAA011

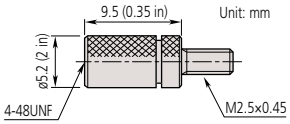

Order No.
21AAA012

Dial Indicators

Interchangeable Back Covers
Optional Accessories for Digimatic and Dial Indicators

Various Back Covers

- A wide variety of indicator back cover types is available for Mitutoyo Digimatic and dial indicators.
- Most lugged back covers can be rotated by 90° because they have four retaining screws. However, **190561** and **137905** (for compact dial indicators) are only equipped with two retaining screws, therefore the lug orientation cannot be changed.

Description		
Lug-on-Center Back Clamped by securing the lug section.	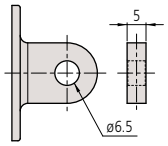 Unit: mm	
Flat Back Cannot be clamped by means of the back cover.	Unit: mm	
Magnetic Back (Magnetic force: 10 N) Can be easily attached to the flat surfaces of iron plates or machine tools with a magnet.	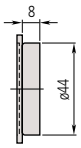 Unit: mm	
Back with Offset Lug One side of the lug section is on the center line.	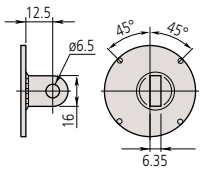 Unit: mm	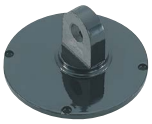
Back with Post Used by clamping the ø12.7 pillar section.	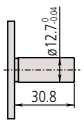 Unit: mm	
Back with Screw Mount Clamped with a screw with its thread as a guide.	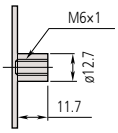 Unit: mm	
Adjustable Back Can be slid with the groove as a guide. Clamped with a screw.	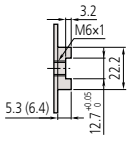 Unit: mm	
Back with Adjustable Bracket Can be attached to a device, jig, or tool and easily fine-tuned vertically with a hex wrench. (Travel range: Approx. 20 mm) Attachment procedure 1. Attach only the back cover with rack to the dial indicator. 2. Attach the main unit to a device, jig, or tool with M6 hexagon socket head cap screws. 3. Insert the back cover with rack into the main unit. 4. Use the supplied hex wrench (3/32") to fine-tune and fix with clamp screws.	Unit: mm 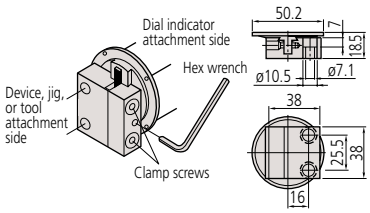	

Need Repair?

Selection Table for Various Back Covers

- If the back cover of water-proof model is replaced, the water resistance will not be guaranteed.
- When mounting a back cover to lightweight type Series (**297*AB**), separately prepare 4 fixing screws (**546666** Self-tapping screw only for plastic). Do not apply a tightening torque of more than 20 N•cm in order to avoid stripping the screw threads.

Dial Indicators

Inch

		Series **1**			Series **2**			Series **3**&**4**
	Bezel diameter	1.22 in	1.57 in	1.57 in (W/D proof models)	2.19/2.24 in	2.19 in (W/D proof models)	2.24 in (W/D proof models)	3.07/3.62 in
Back Covers	Lug-on-Center Back	**190139**	**101307**	**101307**	**101306**		**21BZB104**	**100797**
	Flat Back	**191559**	**101211**	**136872**	**101039**	**192910**	**21AZB231**	**100836**
	Magnetic Back	—			**900928**			**900929**
	Back with Offset Lug	—			**101167**			—
	Back with Post	—	**193172**		**101169**			—
	Back with Screw Mount	—			**101170** (#1/4-28UNF)			—
	Adjustable Back	—	**129721** (#1/4-20UNC)		**101168** (#1/4-20UNC)			—
	Back with Adjustable Bracket	—			**901963**			—

Metric

		Series **1**				Series **2**			Series **3**&**4**
	Bezel diameter	31 mm	36 mm	40 mm	40 mm (W/D proof models)	55.6/57 mm	55.6 mm (W/D proof models)	57 mm (W/D proof models)	78/92 mm
Back Covers	Lug-on-Center Back	**190561**	**137905**	**101210**	**101210**	**101040**		**21AZB230**	**100691**
	Flat Back	**191559**	**137906**	**101211**	**136872**	**101039**	**192910**	**21AZB231**	**100836**
	Magnetic Back	—				**900928**			**900929**
	Back with Offset Lug	—				**101167**			—
	Back with Post	—		**193172**		**101169**			—
	Back with Screw Mount	—		**193173** (M6×1)		**136023** (M6×1)			—
	Adjustable Back	—		**136025** (M6×1)		**136026** (M6×1)			—
	Back with Adjustable Bracket	—				**901963**			—

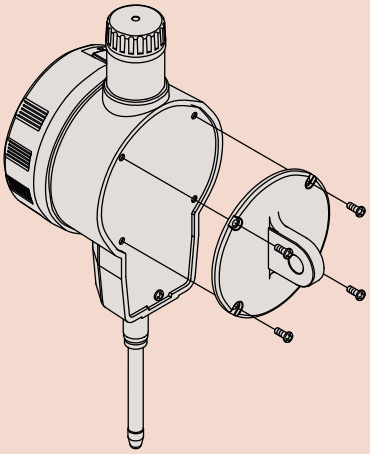

Digimatic Indicators

	Current Series/ model	(0.5" models) **ID-F** Series **ID-C** Series **ID-S** Series		(1" & 2" models) **ID-F** Series **ID-C** Series		**ID-C** Series **ID-S** Series (Waterproof type)	
	Type	ISO/JIS	ANSI/AGD	ISO/JIS	ANSI/AGD	ISO/JIS	ANSI/AGD
Back Covers	Lug-on-Center Back	**101040**	**101306**	**101040**	**101306**	**21AZB230**	**21BZB104**
	Flat Back	**101039**		—		**21AZB231**	
	Magnetic Back	**900928**					
	Back with Offset Lug	**101167**					
	Back with Post	**101169**					
	Back with Screw Mount	**136023** (M6×1)	**101170** (#1/4-28UNF)	**136023** (M6×1)	**101170** (#1/4-28UNF)	**136023** (M6×1)	**101170** (#1/4-28UNF)
	Adjustable Back	**136026** (M6×1)	**101168** (#1/4-20UNC)	**136026** (M6×1)	**101168** (#1/4-20UNC)	**136026** (M6×1)	**101168** (#1/4-20UNC)
	Back with Adjustable Bracket	**901963**					

* For the **ID-CNX**, **ID-FNX** Series (25.4, 50.8 mm/1, 2 inch models), attach the back covers as shown to the left.

Dial Indicators

Spindle Lifting Lever and Cable
Optional Accessories for Digimatic and Dial Indicators

Spindle Lifting Cable

- The spindle can be moved up and down using the lifting lever or the lifting cable.
- Attaching the dial indicator to a stand improves measurement accuracy and efficiency.

Lifting cable

Stroke: 10 mm

21JZA301

21JZA295

21JZA301: with auto-stop function (300 mm)
21JZA295: without auto-stop function (500 mm)

Note 1: Compatible with 0.5"/12.7mm range models. This accessory is not applicable to dial indicators with a range of 20 mm or more, special models (**2048A(B)-10, 2046A(B)-80**), certain models of 1 series (**1911A(B)-10**, **1913A(B)-10**, **1921A(B)-10**, **1923A(B)-10**, **1925A(B)-10**, **2971AB**, **2972AB**, **2973AB**, **2976AB**, **2977AB**, **2978AB**), back plunger type and water-proof type.

Note 2: The lifting cable is attached to the spindle. Therefore, its weight is added to the measuring force. (Approximately 0.3 N max.)

Spindle Lifting Lever

21EAA426

Suitable for 4.8 mm spindle diameter.

Spindle Lifting Knob

Set Order No.	Range
21EZA197	For 1" range
21EZA200	For 2" range

Typical Application

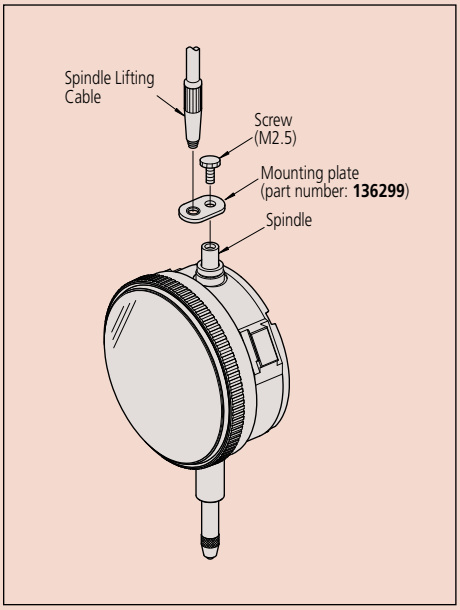

Where to Buy

Spindle Lifting Lever

902100*1
Use for A type and S type SERIES **1** dial indicators.

21EZA198*3
Use for A type SERIES **2**, **3**, and **4** dial indicators (up to 0.4 in / 10 mm), ID-S and ID-C digital indicators (0.5 in / 12.7mm models)

21AZB149*2 — Lever only
Use for S type SERIES **2**, **3**, and **4** dial indicators (up to 0.4 in / 10 mm).

21AZB149: Lever
101171: Stop screw

21AZB150*2
Use for A type and S type SERIES **2** and **3** dial indicators (from 0.4 in / 10 mm up to 0.8 in / 20 mm).

*1 Before use, replace the stop screw with the standard accessory.
*2 Use the stop screw already fixed to the dial indicator body.
*3 Stop screw is M2.5x0.45 thread.

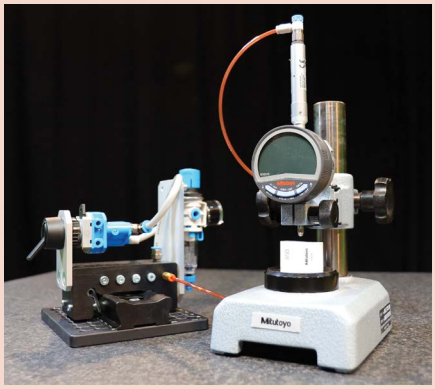

Air Lifting Attachment shown fully assembled with optional accessories, indicator and stand.

Pneumatic Lifting Attachment

This pneumatic system retracts the spindle in its free state (when air is cut). When air is supplied, the pneumatic retraction is overcome so each spindle extends to contact parts using its own spring force. Can be used to safely retract spindles on fixtures, or simply to make more consistent measurements with an indicator mounted in a stand.

- Attaches to .5" / 12.7mm range indicators
- Simple, switch-operation is possible using optional manifold (stand components for manifold also shown below)
- Options also available for Linear Gages (refer to section G)

Order No.	Description
903594	Pneumatic/Air Lifting Attachment, M7.4 X 0.5

903594

Accessories

Order No.	Description
64PTS315	Polyurethane Inch Tubing 1/8" O.D.0.08" I.D. 66FT roll
64PTS316	Fittings Male Connector Pack of 10PCS 1/8"OD Tube X M5 X 0.8
K551378	Pneumatic Control Manifold, Switch-operated
K551362	Top Profile Rail L=125MM
K551306	Base Plate ECO-FIX 125MM X 125MM

Dial Indicators

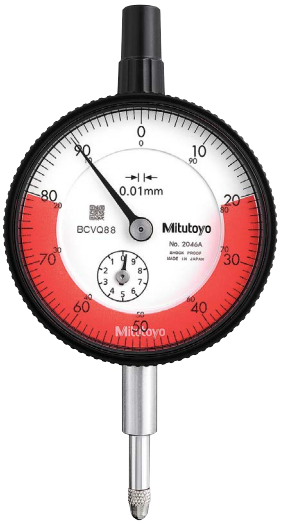

Limit Stickers

- Place limit stickers on a SERIES **2** indicator dial face or crystal to indicate tolerance limits. Stickers are available in: red, green, and yellow.

Red

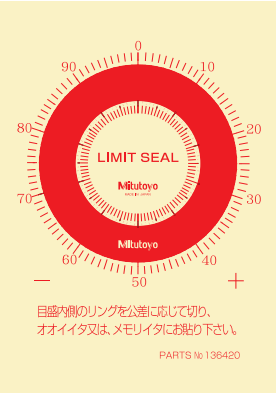

136420
(10 sheets/set)

Green

136421
(10 sheets/set)

Yellow

136422
(10 sheets/set)

Color-coded Spindle Caps

- 9 color-coded spindle caps are available for compact/standard dial indicators with a range of 10 mm or less.

Color	Order No.	
	Standard	Water-proof
Black	**21AAB675**	**21AAB676**
White	**21AAB675W**	**21AAB676W**
Red	**21AAB675R**	**21AAB676R**
Green	**21AAB675G**	**21AAB676G**
Blue	**21AAB675B**	**21AAB676B**
Yellow	**21AAB675Y**	**21AAB676Y**
Orange	**21AAB675D**	**21AAB676D**
Pink	**21AAB675P**	**21AAB676P**
Navy	**21AAB675S**	**21AAB676S**

Note: This accessory is not applicable to **1003A(B)**, **1911A(B)-10**, **1913A(B)-10**, **1921A(B)-10**, **1923A(B)-10**, **1925A(B)-10**, **2971AB**, **2972AB**, **2973AB**, **2976AB**, **2977AB**, and **2978AB**.

Note: When attaching to small dial indicators, the measuring range height will be 8 mm taller.

Need Support?

Dial Indicator Repair Tools
Optional Accessories for Dial Indicators

Pointer removing tip (ø0.8) (**126630**)

Pointer removing tool (**126628**)

Pointer removing tip (ø0.5) (**126630B**)

Pointer removing tip (ø1.6) (**126630C**)

Adjustable nut (**100699**)

Pinion rest (**129735**)

Pin rest (**129731**)

Spindle rest (**129730**)

Reamer for pointer (ø0.5: 1/20 taper) (**21JAA273**)

Punch (**129733**)

Reamer (ø0.6: 1/50 taper) (**193702**)

Bearing adjuster (**129734**)

Reamer (ø1: 1/50 taper) (**129736**)

Pin remover (**129732**)

Special repairing technique is necessary for repair work. Note that we cannot guarantee accuracy if critical parts are disassembled.
We recommend that you use our repair service to operate the instrument with peace of mind.

Typical Application

Remove the long hand
Select an appropriate pointer removing tip for the diameter of the hole of the long hand, and attach it to the pointer removing tool using the adjustable nut.
Push the pivot with the pointer removing tool to remove the long hand.

Remove or replace a pin
Place the spindle on the V-groove of the spindle rest. Remove the pin using the pin remover and a commercially available hammer.
To press-fit the pin, tap it directly using a hammer, etc.

Replace the long or little hand
Screw the pinion rest into the pin rest.
Support the pinion with the pinion rest and press-fit the pointer using the punch and a commercially available hammer, etc.

When replacing with a new pointer on an old type of dial indicator or test indicator, reaming is necessary before press-fitting. Use a commercially available pin device (for ø0.8 to 1.2) with one of the following reamers attached.

- Pointers of dial indicators (**A** type) and **TI-X** Series*1 do not require a reamer.
- Use the reamer for pointer (ø0.5: 1/20 taper) for **S** type and **T** type dial indicators*2.
- Depending on the shaft diameter, use reamer (ø1: 1/50 taper) or reamer (ø0.6: 1/50 taper) for **F** type dial indicators and other than **TI-X** Series dial test indicators.

*1 Dial test indicator whose model No. ends in "**X**".
*2 Dial indicator whose Order No. includes an "**S**" and "**T**".

Dial Test Indicators

SERIES 513 — Dial Test Indicator Features

Provides easy access to narrow or recessed areas that cannot be reached with conventional dial indicators.

- Five types are available: standard, standard (20° Tilted Face), vertical, horizontal, and universal, allowing users to select the model most suited to their needs.
- Newly designed contact point holder prevents backlash and permits smooth pointer operation.
- Ruby tip has wear-resistance several times greater than a carbide tip and, since it is nonconductive, it can be used safely on an electrical discharge machine.
- The pointer and carbide contact point are weakly magnetic.

  Note 1: Magnetic material is used for some internal parts.
- Contact point length is printed on dial face to avoid accuracy issues.

  Note 2: Attaching a contact point of incorrect length will lead to measurement failure.
- Glare-free flat crystal face allows easy reading of graduations. Multi-layer and composite coatings provide a more stain-resistant, anti-reflective crystal.
- Bonding the bezel and crystal together leaves no gap for cutting fluid or oil to penetrate through to the dial face. (Note that this type is NOT water-proof.)
- The main unit is equipped with three dovetails to which the stem with dovetail groove ø6 (standard accessory) can be attached. This greatly improves convenience as the attachment location can be adjusted as needed.
- Metric Dial Test Indicator is inspected according to JIS B 7533:2015. Standard, 20° tilted face, and vertical types are inspected with the dial face in the upward orientation, while the horizontal type is inspected with the dial face in the vertical orientation to guarantee their accuracy.

F

Standard

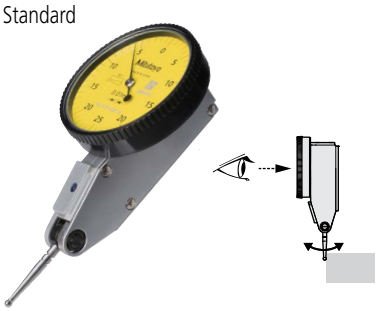

Standard
(20° Tilted face)

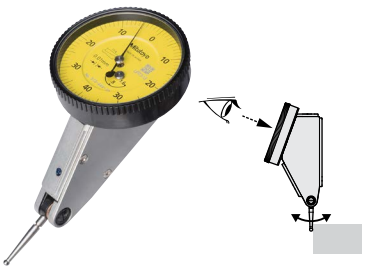

Vertical

Universal

Horizontal

Naming of Parts

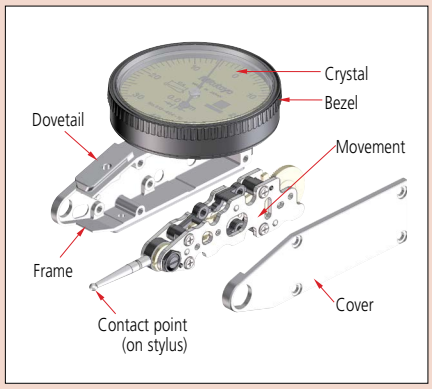

Feature Icons

Icon	Feature description
	High accuracy
	With revolution counter
	Long contact point
	Standard
	Double scale spacing
	Compact (Small face diameter)
	Carbide contact point
	Ruby contact point (Non-conductive and abrasion resistant)

Find a Distributor

DIMENSIONS

Standard

Unit: mm

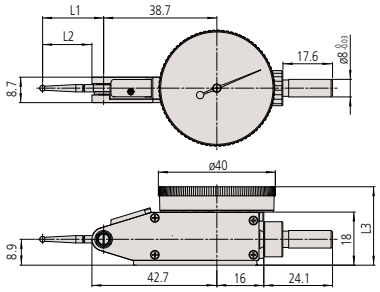

Order No.	L1	L2	L3
513-401-10E	14.7	11.2	27
513-471-10E			
513-405-10E / A / T	18.7	15.2	
513-475-10E			
513-425-10E / A			28
513-404-10E / A / T	20.9	17.4	27
513-474-10E			
513-424-10E / A / T	22.2	18.7	
513-426-10E / A			28
513-478-10E			27
513-414-10E / A / T	37.4	33.9	
513-415-10E / A / T	44.5	41.0	
513-477-10E			

Compact

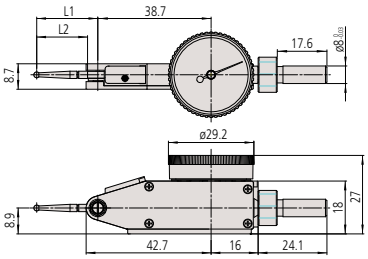

Type	Order No.	L1	L2
Compact	513-465-10E	18.7	15.2
	513-464-10E	20.9	17.4
	513-466-10E	22.2	18.7

Note: A slight difference may occur depending on the center of the contact point, graduation plate, and stem fixing position, etc.

Special Set: 513-907-10E (inch)

513-402-10E: Dial test indicator
7014E-10: Mini magnetic stand

513-908-10E (Metric)

513-404-10E: Dial test indicator
7014-10: Mini magnetic stand

Dial Test Indicator SERIES 513 — Standard Type

513-402-10E
Contact point No. 133195

513-404-10E
Contact point No. 103006

513-415-10E
Contact point No. 136013

513-465-10E
Contact point No. 103011

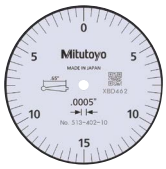

Graduation: 0.0005 in
Range: 0.03 in

513-402-10E / 10T
Standard
Carbide contact point

Graduation: 0.0001 in
Range: 0.008 in

513-403-10E / 10T
Standard
Carbide contact point

Graduation: 0.01 mm
Range: 0.8 mm

513-404-10E / 10A / 10T
Standard
Carbide contact point

Graduation: 0.01 mm
Range: 0.5 mm

513-424-10E / 10A / 10T
Standard
Double scale spacing
Carbide contact point

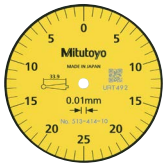

Graduation: 0.01 mm
Range: 0.5 mm

513-414-10E / 10A / 10T
Long contact point
Carbide contact point
Double scale spacing

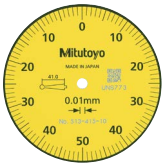

Graduation: 0.01 mm
Range: 1.0 mm

513-415-10E / 10A / 10T
Long contact point
Carbide contact point

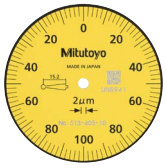

Graduation: 0.002 mm
Range: 0.2 mm

513-405-10E / 10A / 10T
Standard
Carbide contact point

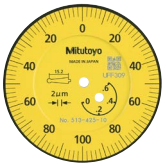

Graduation: 0.002 mm
Range: 0.6 mm

513-425-10E / 10A
With revolution counter
Carbide contact point

Graduation: 0.002 mm
Range: 0.2 mm

513-465-10E
Compact
Carbide contact point

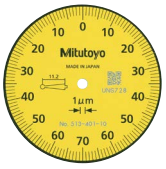

Graduation: 0.001 mm
Range: 0.14 mm

513-401-10E
High accuracy
Carbide contact point

Note: **513-4XX-10** is indicated on the dial face and the inspection certificate. The Order No. with suffix (E/T/A) is a set item which includes accessories. The main unit is not available as a standalone item.

F

Dial Test Indicators

Dial Test Indicator
SERIES 513 — Standard Type

SPECIFICATIONS

Inch

Order No. Basic set	Plus set	Full set	Graduation (in)	Range (in)	Dial reading	Accuracy (in)	Hysteresis	Repeatability	Mass (g)	Measuring force (N)	High accuracy	With revolution counter	Long contact point	Standard	Double scale spacing	Compact	Carbide contact point	Ruby contact point
513-402-10E	–	**513-402-10T**	0.0005	0.03	0-15-0	±0.0005	0.0002	±0.0002	45	0.3 or less				✔			✔	
513-472-10E	–	–												✔				✔
513-412-10E	–	**513-412-10T**								0.2 or less			✔				✔	
513-479-10E	–	–											✔					✔
513-462-10E	–	–							41	0.3 or less						✔	✔	
513-407-10E	–	**513-407-10T**	0.00005	0.008	0-4-0	±0.0001	0.0001	±0.00004	45								✔	
513-403-10E	–	**513-403-10T**	0.0001											✔			✔	
513-473-10E	–	–												✔				✔
513-463-10E	–	–							41							✔	✔	
513-907-10E[*2]	–	–	0.0005	0.03	0-15-0	±0.0005	0.0002	±0.0002	45					✔			✔	

*2 A set consisting of **513-402-10E** and **7014E-10**.

Metric

Order No. Basic set	Plus set	Full set	Graduation (mm)	Range (mm)	Dial reading	Accuracy (μm) Measuring range	One rev.	10 scale divisions	Hysteresis	Repeatability	Mass (g)	Measuring force (N)	High accuracy	With revolution counter	Long contact point	Standard	Double scale spacing	Compact	Carbide contact point	Ruby contact point
513-424-10E	**513-424-10A**	**513-424-10T**	0.01	0.5	0-25-0	6	–	5	4	3	45	0.3 or less				✔	✔		✔	
513-478-10E	–	–														✔	✔			✔
513-466-10E	–	–									41						✔	✔	✔	
513-414-10E	**513-414-10A**	**513-414-10T**				10			5		45	0.2 or less			✔		✔		✔	
513-426-10E	**513-426-10A**	–		1.5		16	10					0.4 or less		✔			✔		✔	
513-404-10E	**513-404-10A**	**513-404-10T**		0.8	0-40-0	9			4			0.3 or less				✔			✔	
513-474-10E	–	–														✔				✔
513-464-10E	–	–									41							✔	✔	
513-415-10E	**513-415-10A**	**513-415-10T**		1.0	0-50-0	10	–		5		45	0.2 or less			✔				✔	
513-477-10E	–	–													✔					✔
513-405-10E	**513-405-10A**	**513-405-10T**	0.002	0.2	0-100-0	4		2	3	1		0.3 or less				✔			✔	
513-475-10E	–	–														✔				✔
513-465-10E	–	–									41							✔	✔	
513-425-10E	**513-425-10A**	–		0.6		7	5		4		45	0.4 or less		✔					✔	
513-401-10E	–	–	0.001	0.14	0-70-0	4	–		3			0.3 or less	✔						✔	
513-471-10E	–	–											✔							✔
513-908-10E[*1]	–	–	0.01	0.8	0-40-0	9	–	5	4	3	45					✔			✔	

*1 A set consisting of **513-404-10E** and **7014-10**.

Inch / Metric

Order No. Basic set	Plus set	Full set	Graduation	Range	Dial reading	Accuracy (in)	Hysteresis	Repeatability	Mass (g)	Measuring force (N)	High accuracy	With revolution counter	Long contact point	Standard	Double scale spacing	Compact	Carbide contact point	Ruby contact point
513-406-10E	–	**513-406-10T**	0.0005 in /0.01 mm	0.03 in /0.7 mm	0-15-0 /0-35-0	±0.0005	0.0002	±0.0002	45	0.3 or less							✔	

Metric / Inch

Order No. Basic set	Plus set	Full set	Graduation	Range	Dial reading	Accuracy (μm) Measuring range	10 scale divisions	Hysteresis	Repeatability	Mass (g)	Measuring force (N)	High accuracy	With revolution counter	Long contact point	Standard	Double scale spacing	Compact	Carbide contact point	Ruby contact point
513-409-10E	–	**513-409-10T**	0.002 mm /0.0001 in	0.2 mm /0.0076 in	0-10-0 /0-38-0	4	2	3	1	45	0.3 or less							✔	

Set Configuration: Inch and Inch / Metric

Full set **513-4XX-10T**

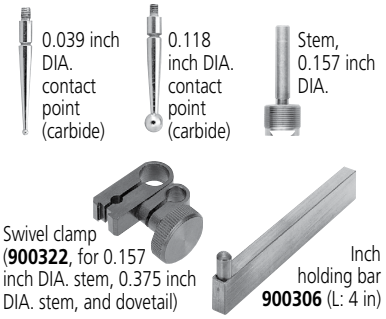

Basic set **513-4XX-10E**

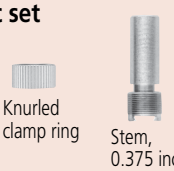

513-4XX-10 is indicated on the dial face.

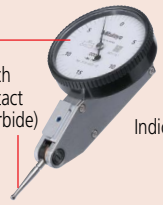

Set Configuration: Metric and Metric / Inch

Full set **513-4XX-10T**

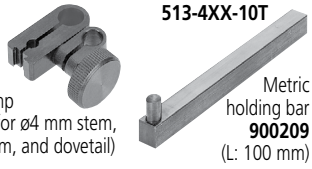

Plus set **513-4XX-10A**

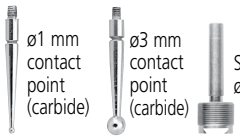

Basic set **513-4XX-10E**

513-4XX-10 is indicated on the dial face.

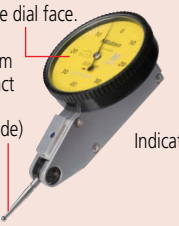

Example of Use of a Test Indicator with a Tilted Dail Face

- The dial face obliquely faces upward, allowing users to read the graduations from the user's side. It is convenient when probing on the side of a large workpiece and the workbench is high.

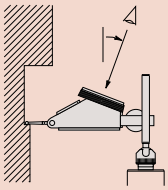

- Using the universal holder allows easy hole centering. The dial face always faces upward when the indicator is rotated, which makes reading easy.

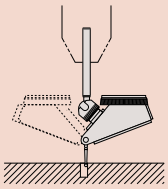

Dial Test Indicator
SERIES 513 — Standard (20° Tilted Face), Vertical, and Horizontal Types

513-444-10E / 10A / 10T
Contact point No. 103006

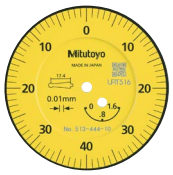

Graduation: 0.01 mm
Range: 1.6 mm

With revolution counter
Carbide contact point

513-445-10E / 10A / 10T
Contact point No. 103011

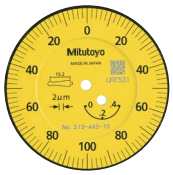

Graduation: 0.002 mm
Range: 0.4 mm

With revolution counter
Carbide contact point

513-454-10E / 10A / 10T
Contact point No. 103006

Graduation: 0.01 mm
Range: 0.8 mm

Carbide contact point

513-452-10E / 10T
Contact point No. 133195

Graduation: 0.0005 in
Range: 0.03 in

Carbide contact point

513-484-10E / 10A / 10T
Contact point No. 103006

Graduation: 0.01 mm
Range: 0.8 mm

Carbide contact point

513-485-10E
Contact point No. 103011

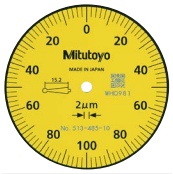

Graduation: 0.002 mm
Range: 0.2 mm

Carbide contact point

Got Questions?

Note: **513-4XX-10** is indicated on the dial face and the inspection certificate. The Order No. with suffix (E/A/T) is a set item which includes accessories. The main unit is not available as a standalone item.

Dial Test Indicators

With revolution counter | Long contact point | Carbide contact point

SPECIFICATIONS

Inch — Standard (20° tilted face) type

Order No. Basic set	Order No. Plus set	Order No. Full set	Graduation (in)	Range (in)	Dial reading	Accuracy (in) One rev.	Accuracy (in) First 2.5 rev.	Hysteresis	Repeatability	Mass (g)	Measuring force (N)	With revolution counter	Long contact point	Carbide contact point	Remarks
—	513-442-10A	513-442-10T	0.0005	0.06	0-15-0	±0.0005	±0.0005	0.0002	±0.0002	48	0.3 or less	✔		✔	
—	513-442-16A	513-442-16T									0.3 or less	✔		✔	Black dial
—	513-446-10A	513-446-10T									0.2 or less	✔	✔	✔	
—	513-446-16A	513-446-16T									0.2 or less	✔	✔	✔	Black dial
—	513-443-10A	513-443-10T	0.0001	0.016	0-4-0	±0.0002	±0.0002	0.0001	±0.00004		0.3 or less	✔		✔	
—	513-443-16A	513-443-16T									0.3 or less	✔		✔	Black dial

Metric — Standard (20° tilted face) type

Order No. Basic set	Order No. Plus set	Order No. Full set	Graduation (mm)	Range (mm)	Dial reading	Accuracy (µm) Measuring range	Accuracy (µm) One rev.	Accuracy (µm) 10 scale divisions	Hysteresis	Repeatability	Mass (g)	Measuring force (N)	With revolution counter	Long contact point	Carbide contact point	Remarks
513-444-10E	513-444-10A	513-444-10T	0.01	1.6	0-40-0	16	10	5	5	3	48	0.3 or less	✔		✔	
513-445-10E	513-445-10A	513-445-10T	0.002	0.4	0-100-0	6	5	2	4	1			✔		✔	

Inch — Vertical type

Order No. Basic set	Order No. Plus set	Order No. Full set	Graduation (in)	Range (in)	Dial reading	Accuracy (in) One rev.	Accuracy (in) First 2.5 rev.	Hysteresis	Repeatability	Mass (g)	Measuring force (N)	With revolution counter	Long contact point	Carbide contact point	Remarks
513-452-10E	—	513-452-10T	0.0005	0.03	0-15-0	±0.0005	—	0.0002	±0.0002	46	0.3 or less			✔	
513-453-10E	—	513-453-10T	0.0001	0.008	0-4-0	±0.0001	—	0.0001	±0.00004		0.3 or less			✔	

Metric — Vertical type

Order No. Basic set	Order No. Plus set	Order No. Full set	Graduation (mm)	Range (mm)	Dial reading	Accuracy (µm) Measuring range	Accuracy (µm) One rev.	Accuracy (µm) 10 scale divisions	Hysteresis	Repeatability	Mass (g)	Measuring force (N)	With revolution counter	Long contact point	Carbide contact point	Remarks
513-456-10E	—	—	0.01	0.5	0-25-0	6	—	5	4	3	46	0.3 or less			✔	
513-454-10E	513-454-10A	513-454-10T		0.8	0-40-0	9	—								✔	
513-455-10E	513-455-10A	513-455-10T	0.002	0.2	0-100-0	4	—	2	3	1					✔	

Inch — Horizontal Type

Order No. Basic set	Order No. Plus set	Order No. Full set	Graduation (in)	Range (in)	Dial reading	Accuracy (in) One rev.	Accuracy (in) First 2.5 rev.	Hysteresis	Repeatability	Mass (g)	Measuring force (N)	With revolution counter	Long contact point	Carbide contact point	Remarks
—	513-482-10A	513-482-10T	0.0005	0.03	0-15-0	±0.0005	—	0.0002	±0.0002	53	0.3 or less			✔	

Metric — Horizontal Type

Order No. Basic set	Order No. Plus set	Order No. Full set	Graduation (mm)	Range (mm)	Dial reading	Accuracy (µm) Measuring range	Accuracy (µm) One rev.	Accuracy (µm) 10 scale divisions	Hysteresis	Repeatability	Mass (g)	Measuring force (N)	With revolution counter	Long contact point	Carbide contact point	Remarks
513-486-10E	—	—	0.01	0.5	0-25-0	6	—	5	4	3	53	0.3 or less			✔	
513-484-10E	513-484-10A	513-484-10T		0.8	0-40-0	9	—								✔	
513-485-10E	—	—	0.002	0.2	0-100-0	4	—	2	3	1					✔	

DIMENSIONS

Standard (20° Tilted Face) Type

Unit: mm

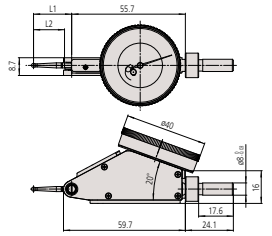

Order No.	L1	L2
513-445-10E	18.7	15.2
513-444-10E	20.9	17.4

Horizontal Type

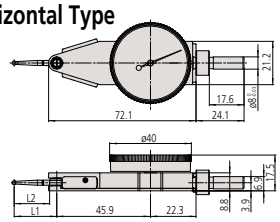

Order No.	L1	L2
513-484-10E	20.9	17.4
513-485-10E	18.7	15.2
513-486-10E	22.2	18.7

Vertical Type

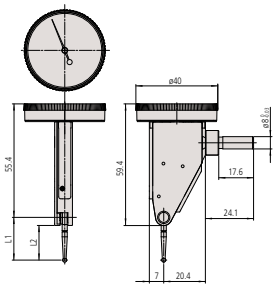

Order No.	L1	L2
513-454-10E	20.9	17.4
513-455-10E	18.7	15.2
513-456-10E	22.2	18.7

Note: A slight difference may occur depending on the center of the contact point, graduation plate, and stem fixing position, etc.

Set Configuration: Inch

Full set — **513-4XX-1XT**

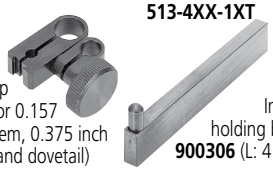

Swivel clamp (**900322**, for 0.157 inch DIA. stem, 0.375 inch DIA. stem, and dovetail)

Inch holding bar **900306** (L: 4 in)

Plus set — **513-4XX-1XA**

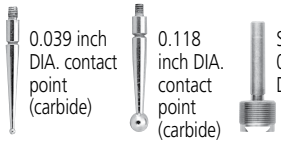

0.039 inch DIA. contact point (carbide)

0.118 inch DIA. contact point (carbide)

Stem, 0.157 inch DIA.

Basic set — **513-4XX-10E**

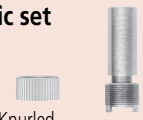

Knurled clamp ring

Stem, 0.375 inch DIA.

513-4XX-1X is indicated on the dial face.

0.079 inch DIA. contact point (carbide)

Indicator

Set Configuration: Metric

Full set — **513-4XX-10T**

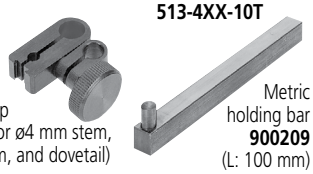

Swivel clamp (**900321**, for ø4 mm stem, ø8 mm stem, and dovetail)

Metric holding bar **900209** (L: 100 mm)

Plus set — **513-4XX-10A**

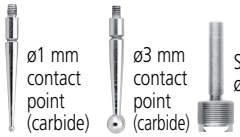

ø1 mm contact point (carbide)

ø3 mm contact point (carbide)

Stem, ø4 mm

Basic set — **513-4XX-10E**

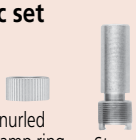

Knurled clamp ring

Stem, ø8 mm

513-4XX-10 is indicated on the dial face.

ø2 mm contact point (carbide)

Indicator

Set Configuration: Inch

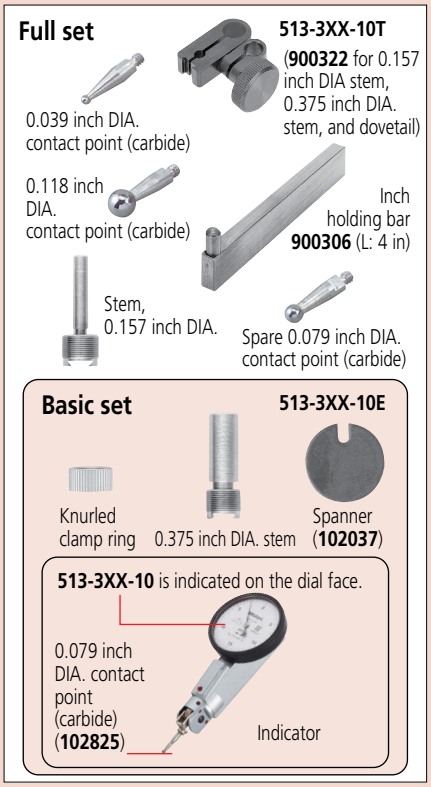

Set Configuration: Metric

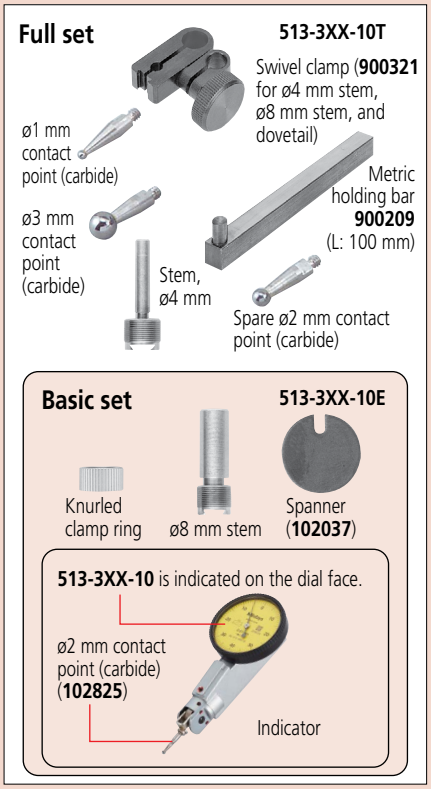

Optional Accessories

- Swivel clamps (See page F-84)
- Holding bars (See page F-85)
- Stems (See page F-85)
  102824: ø1 mm contact point (carbide)
  102825: ø2 mm contact point (carbide)
  102826: ø3 mm contact point (carbide)

Dial Test Indicators

Dial Test Indicator SERIES 513 — Universal Type

513-304-10E

Universal Type

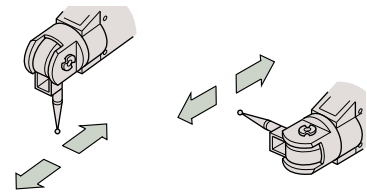

- The direction of the probe movement can be freely changed by rotating the contact point section of the indicator.

SPECIFICATIONS

Inch

Order No. Basic set	Order No. Full set	Graduation (in)	Range (in)	Dial reading	Accuracy (in)	Hysteresis	Repeatability	Mass (g)	Measuring force (N)	High accuracy	With revolution counter	Long contact point	Standard	Double scale spacing	Compact	Dustproof	Carbide contact point	Ruby contact point
513-302-10E	513-302-10T	0.0005	0.03	0-15-0	±0.0005	0.0003	±0.0003	71	0.3 or less								✔	

Metric

Order No. Basic set	Order No. Full set	Graduation (mm)	Range (mm)	Dial reading	Accuracy (µm) Measuring range	Accuracy (µm) One rev.	Accuracy (µm) 10 scale divisions	Hysteresis	Repeatability	Mass (g)	Measuring force (N)	High accuracy	With revolution counter	Long contact point	Standard	Double scale spacing	Compact	Dustproof	Carbide contact point	Ruby contact point
513-304 -10E	513-304-10T	0.01	0.8	0-40-0	9	—	5	4	3	71	0.3 or less								✔	

DIMENSIONS

Unit: mm

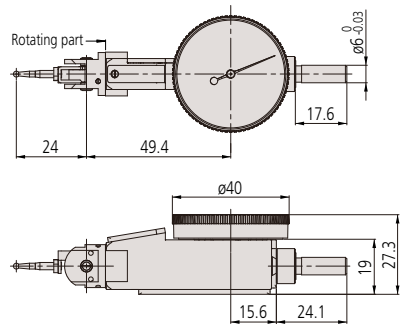

Note: A slight difference may occur depending on the center of the contact point, graduation plate, and stem fixing position, etc.

513-304-10E

Dial Test Indicators

Pocket Type Dial Test Indicator SERIES 513

- This test indicator series is slimmer than standard test indicators without a clutch lever, making it more suitable for measuring deep points.
- Contact point length is printed on dial face to avoid accuracy issues.

  Note 1: Attaching a contact point of incorrect length will lead to measurement failure.
- Glare-free flat crystal face allows easy reading of graduations. Multi-layer composite coatings make the crystal more anti-reflective and stain resistant.
- Bonding the bezel and crystal together leaves no gap for cutting fluid or oil to penetrate through to the dial face. (Note that this type is NOT water-proof.)
- Clutch type (with a clutch lever)

  Note 2: See page F-83 for notes on differences with models that do not have a clutch lever.
- A ø2 mm carbide contact point is supplied as standard.

513-517-10E / 513-517-10T
- Standard
- Compact
- Carbide contact point

Graduation: 0.01 mm
Range: 0.8 mm

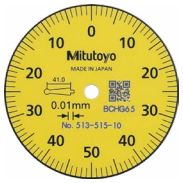

513-515-10E / 513-515-10T
- Long contact point
- Compact
- Carbide contact point

Graduation: 0.01 mm
Range: 1 mm

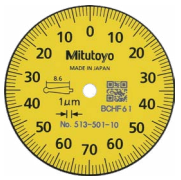

513-501-10E / 513-501-10T
- High accuracy
- Compact
- Carbide contact point

Graduation: 0.001 mm
Range: 0.14 mm

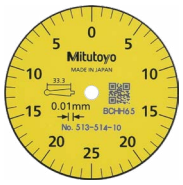

513-514-10E / 513-514-10T
- Long contact point
- Double scale spacing
- Compact
- Carbide contact point

Graduation: 0.01 mm
Range: 0.5 mm

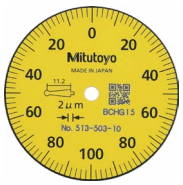

513-503-10E / 513-503-10T
- Standard
- Compact
- Carbide contact point

Graduation: 0.002 mm
Range: 0.2 mm

Set Configuration: Inch

Full set — **513-5XX-10T**

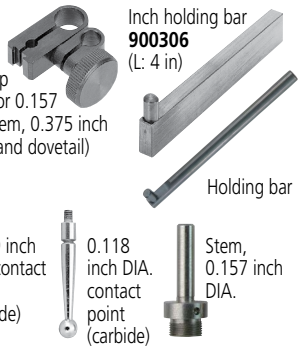

Basic set — **513-5XX-10E**

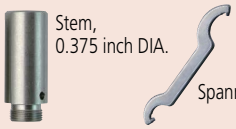

513-5XX-10 is indicated on the dial face.

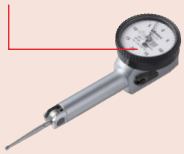

Set Configuration: Metric

Full set — **513-5XX-10T**

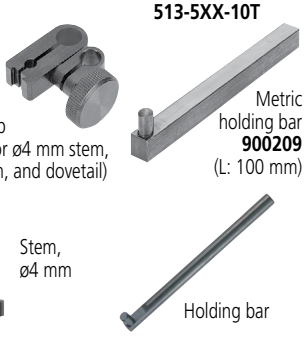

Basic set — **513-5XX-10E**

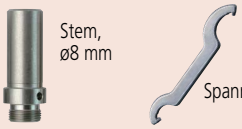

513-5XX-10 is indicated on the dial face.

Dial Test Indicators

513-518-10E / 513-518-10T

Compact
Carbide contact point

Graduation: 0.001 in
Range: 0.04 in

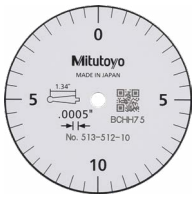

513-512-10E / 513-512-10T

Long contact point
Double scale spacing
Compact
Carbide contact point

Graduation: 0.0005 in
Range: 0.02 in

513-504-10E / 513-504-10T

Compact
Carbide contact point

Graduation: 0.0001 in
Range: 0.01 in

SPECIFICATIONS

Inch

Order No.		Graduation (in)	Range (in)	Dial reading	Accuracy (in)		Hysteresis	Repetability	Mass (g)	Measuring force (N)	High accuracy	With revolution counter	Long contact point	Standard	Double scale spacing	Compact	Carbide contact point	Ruby contact point
Basic set	Full set				One rev.	First 2.5 rev.												
513-518-10E	**513-518-10T**	0.001	0.04	0-20-0	±0.001	–	0.0002	±0.0004	50	0.3 or less						✔	✔	
513-512-10E	**513-512-10T**	0.0005	0.02	0-10-0	±0.0005	–	0.0002	±0.0002	51	0.3 or less			✔		✔	✔	✔	
513-504-10E	**513-504-10T**	0.0001	0.01	0-5-0	±0.0002	–	0.0001	±0.00004	50	0.3 or less						✔	✔	

Metric

Order No.		Graduation (mm)	Range (mm)	Dial reading	Accuracy (µm)			Hysteresis	Repetability	Mass (g)	Measuring force (N)	High accuracy	With revolution counter	Long contact point	Standard	Double scale spacing	Compact	Carbide contact point	Ruby contact point
Basic set	Full set				Measuring range	One rev.	10 scale divisions												
513-517-10E	**513-517-10T**	0.01	0.8	0-40-0	9	–	5	4	3	50	0.3 or less				✔		✔	✔	
513-514-10E	**513-514-10T**	0.01	0.5	0-25-0	10	–	5	5	3	51	0.3 or less			✔		✔	✔	✔	
513-515-10E	**513-515-10T**	0.01	1	0-50-0	10	–	5	5	3	51	0.3 or less			✔			✔	✔	
513-503-10E	**513-503-10T**	0.002	0.2	0-100-0	4	–	2	3	1	50	0.4 or less				✔		✔	✔	
513-501-10E	**513-501-10T**	0.001	0.14	0-70-0	4	–	2	3	1	50	0.5 or less	✔					✔	✔	

Note 1: Be sure to perform calibration with reference gage, etc. after exchanging the contact point. The inside parts may be damaged when the contact point is exchanged due to the breakage. In the case the of the significant deterioration in the operation, repair is required.

Talk to Sales

Dial Test Indicators

Pocket Type Dial Test Indicator
SERIES 513

DIMENSIONS

Unit: mm

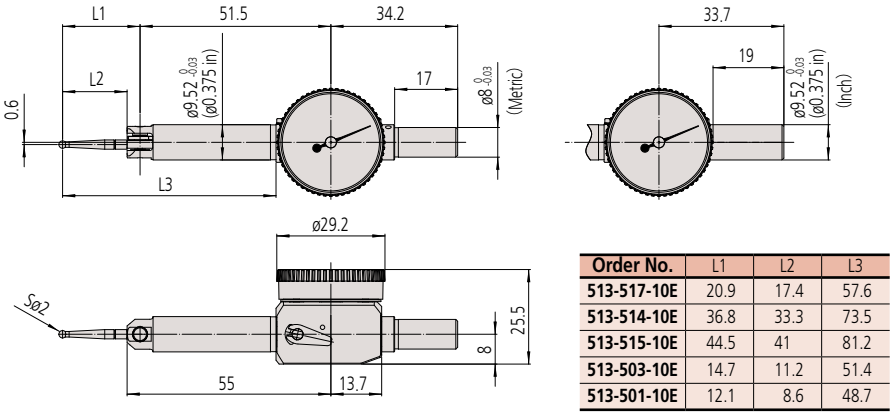

Order No.	L1	L2	L3
513-517-10E	20.9	17.4	57.6
513-514-10E	36.8	33.3	73.5
513-515-10E	44.5	41	81.2
513-503-10E	14.7	11.2	51.4
513-501-10E	12.1	8.6	48.7

Note: A slight difference may occur depending on the center of the contact point, graduation plate, and stem fixing position, etc.

F

Pocket type can be fixed at the body (at ø9.52 (ø0.375 in))

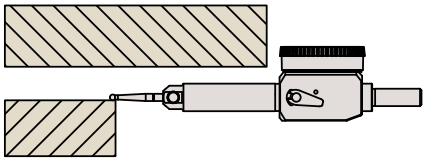

The slim body allows measurements in shallow space.

There are two types of Mitutoyo Dial Test Indicator:
The non-clutch type (without a clutch lever) and the clutch type (with a clutch lever)

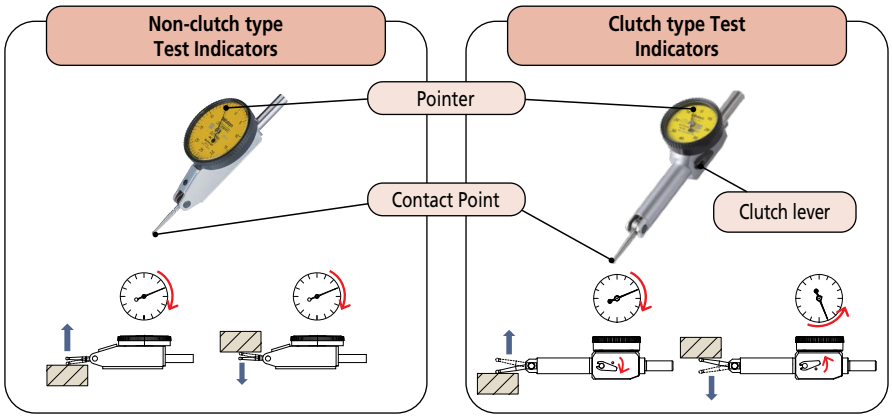

In the non-clutch type, although the contact point may move either in the upward or downward direction, the pointer always rotates clockwise.
In the clutch type, if the clutch lever is set in one position the contact point moves in the upward direction and the pointer rotates clockwise. Conversely, if the lever is set in the other position the contact point moves in the downward direction and the pointer rotates counterclockwise.

Where to Buy

Contact points, Stems and Holders
Optional Accessories for Dial Test Indicators

- Contact Point effective length, L2, must match what is currently mounted on the indicator. Effective length is printed on the dial face.

Contact point (Metric Models Only*)

* Except for universal type dial test indicator **513-304-10E**(T).

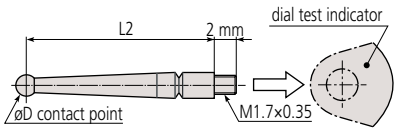

ø0.5 mm contact point (Steel)

190547 (L2=11.2 mm)
21CAB109 (L2=15.2 mm)
190549 (L2=17.4 mm)
190654 (L2=18.7 mm)
21CAB111 (L2=33.9 mm)
190656 (L2=41.0 mm)

ø0.7 mm contact point (Steel)

190548 (L2=11.2 mm)
21CAB110 (L2=15.2 mm)
190550 (L2=17.4 mm)
190653 (L2=18.7 mm)
21CAB112 (L2=33.9 mm)
190655 (L2=41.0 mm)

Contact point (Inch Models Only*)

* Except for universal type dial test indicator **513-302-10E**(T).

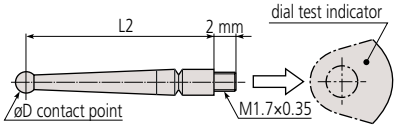

ø1 mm contact point (Carbide)

21CZB065 (L2=.61")
133196 (L2=.65")
136291 (L2=1.2")

ø2 mm contact point (Carbide)

21CZB064 (L2=.61")
133195 (L2=.65")
136290 (L2=1.2")

ø1 mm contact point (Carbide)

103017 (L2=11.2 mm)
131314 (L2=15.2 mm)
103013 (L2=17.4 mm)
137558 (L2=18.7 mm)
131316 (L2=33.9 mm)
136235 (L2=41.0 mm)

ø2 mm contact point (Carbide)

103010 (L2=11.2 mm)
103011 (L2=15.2 mm)
103006 (L2=17.4 mm)
137557 (L2=18.7 mm)
131324 (L2=33.9 mm)
136013 (L2=41.0 mm)

ø3 mm contact point (Carbide)

21CZB066 (L2=.61")
133197 (L2=.65")
136292 (L2=1.2")

ø2 mm contact point (Ruby)

21CZB112 (L2=.61")
21CZA204 (L2=.65")
21CZA214 (L2=1.2")

ø2 mm contact point (Ruby)

21CZA209 (L2=11.2 mm)
21CZB068 (L2=15.2 mm)
21CZA201 (L2=17.4 mm)
21CZA210 (L2=18.7 mm)
21CZA211 (L2=41.0 mm)

ø3 mm contact point (Carbide)

103018 (L2=11.2 mm)
131315 (L2=15.2 mm)
103014 (L2=17.4 mm)
137559 (L2=18.7 mm)
131317 (L2=33.9 mm)
136236 (L2=41.0 mm)

Universal Holder (Dovetail Clamp)

- A universal holder is an attachment used to mount a dial test indicator in a machine tool spindle so that it can be used to align the spindle axis with a workpiece feature such as a hole center, or a machine axis with an edge. (See diagram on the right.) It also gives some protection against accidental impacts on the indicator.

21CZA231 (0.25 inch DIA. stem)
21CZA233 (ø8 mm stem)
21CZA229 (ø6 mm stem)

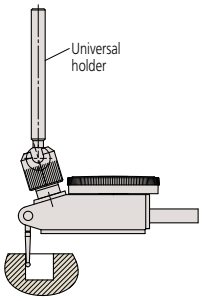

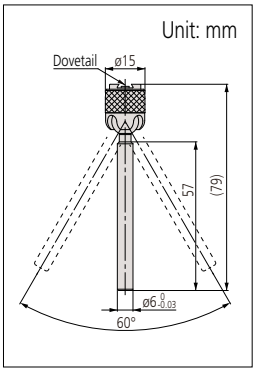

Swivel Clamps

For 0.157 inch DIA. stem, 0.375 inch DIA. stem, and dovetail

900322

For ø6 mm stem, ø8 mm stem, and dovetail

902053

For ø4 mm stem, ø8 mm stem, and dovetail

900321

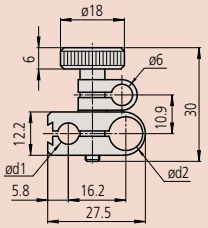

Order No.	d1	d2
902053	6	8
900321	4	8
900322	0.157 in	0.375 in

F

Mitutoyo

Dial Test Indicators

Contact points, Stems and Holders
Optional Accessories for Dial Test Indicators

Spanner

- Used for tightening or loosening the contact point.

102037

Holding Bars

0.25 in×0.5 in

953639 (Length: 2 in)
900306 (Length: 4 in)

ø8 mm (0.315 inch DIA) **900211** (Length: 115 mm)

9×9 mm

953638 (Length: 50 mm)
900209 (Length: 100 mm)

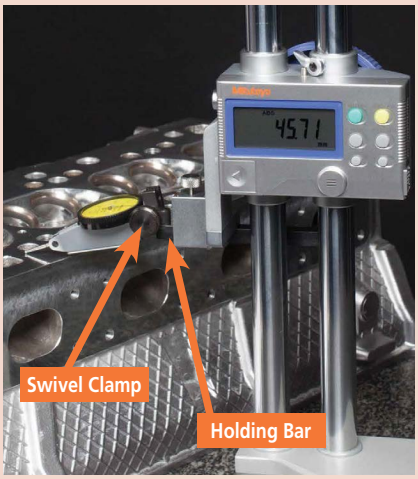

F

Stems with Knurled Clamp Ring

5/32" DIA.
ø4 mm

21CZB131

5/16" DIA.
ø8 mm

21CZB129

3/8" DIA.

21CZB130

Stem DIA. ød	Stem with dovetail (Individual item)	Nut (Individual item)	Full set (Stem with dovetail+Nut)
	Order No.		
ø4	21CAB106	190322	21CZB131
ø6	21CAB103	190322	21CZB128
ø8	21CAB104	190322	21CZB129
ø0.375 in	21CAB105	190322	21CZB130

Centering Holder

- Allows large diameter cylinders or holes to be centered on a machine tool.

901997 (0.25 inch DIA. stem)
901959 (ø8 mm stem)

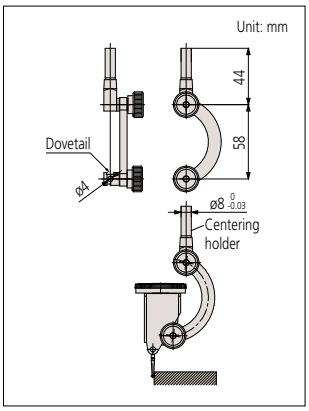

Get a Quote

Optional Accessories for Pocket Type Dial Test Indicators

- Contact Point effective length, L2, must match what is currently mounted on the indicator. Effective length is printed on the dial face.

Contact Point (Inch Models Only)

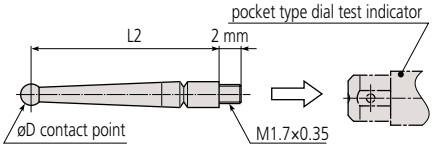

ø1 mm contact point (Carbide)

131314 (L2=.60")
103008 (L2=.91")
131316 (L2=1.34")

ø2 mm contact point (Carbide)

103011 (L2=.60")
103007 (L2=.91")
131324 (L2=1.34")

ø3 mm contact point (Carbide)

131315 (L2=.60")
103009 (L2=.91")
131317 (L2=1.34")

Contact Point (Metric Models Only)

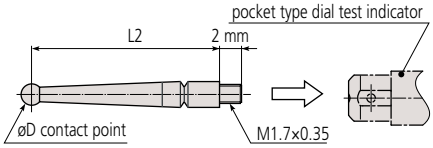

ø0.5 mm contact point (Steel)

190547 (L2=11.2 mm)
190549 (L2=17.4 mm)
190656 (L2=41.0 mm)

ø0.7 mm contact point (Steel)

190548 (L2=11.2 mm)
190550 (L2=17.4 mm)
190655 (L2=41.0 mm)

ø1 mm contact point (Carbide)

136756 (L2=8.6 mm)
103017 (L2=11.2 mm)
103013 (L2=17.4 mm)
137746 (L2=33.3 mm)
136235 (L2=41.0 mm)

ø2 mm contact point (Carbide)

136104 (L2=8.6 mm)
103010 (L2=11.2 mm)
103006 (L2=17.4 mm)
129949 (L2=33.3 mm)
136013 (L2=41.0 mm)

ø2 mm contact point (Ruby)

21CZA209 (L2=11.2 mm)
21CZA201 (L2=17.4 mm)
21CZA211 (L2=41.0 mm)

ø3 mm contact point (Carbide)

136758 (L2=8.6 mm)
103018 (L2=11.2 mm)
103014 (L2=17.4 mm)
137747 (L2=33.3 mm)
136236 (L2=41.0 mm)

Swivel Clamps

For 0.157 inch DIA. stem and 0.375 inch DIA. stem, and dovetail

900322

For ø6 mm stem, ø8 mm stem, and dovetail

902053

For ø4 mm stem and ø8 mm stem, and dovetail

900321

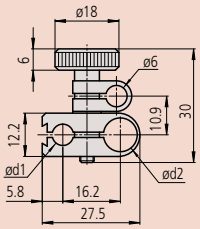

Unit: mm

Order No.	d1	d2
902053	6	8
900321	4	8
900322	0.157 in	0.375 in

Universal Holder (Screw Clamp)

- A universal holder is an attachment used to mount a dial test indicator in a machine tool spindle so that it can be used to align the spindle axis with a workpiece feature such as a hole center, or a machine axis with an edge. (See diagram below.) It also gives some protection against accidental impacts on the indicator.

21CZA232 (0.25 inch DIA. stem)
21CZA234 (ø8 mm stem)
21CZA230 (ø6 mm stem)

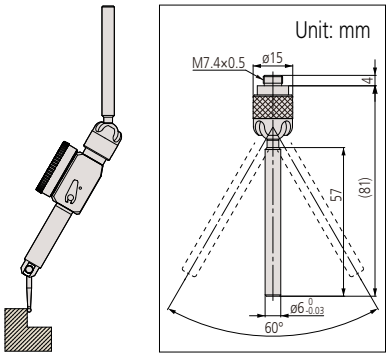

Stems

5/32" DIA. ø4 mm

102036

5/16" DIA. ø8 mm

102822

3/8" DIA.

102081

Spanner

- Used for tightening or removing the mounting stem for Pocket Type Test Indicators

301336

Holding Bars

0.25×0.5 in

953639* (Length: 2 in)
900306* (Length: 4 in)

9×9 mm

900209 (Length: 100 mm)

ø8 mm (0.315 inch DIA)

900211 (Length: 115 mm)

*Suitable for height gages with a scriber section of 12.7×6.35 mm.

Indicator Calibration

i-Checker IC2000
SERIES 170

- The i-Checker makes it easier to continuously perform high-accuracy inspection of various indicators.
- A wide variety of optional accessories enable the inspection and calibration of many types of gages including dial indicators, lever-type dial indicators, dial test indicators, bore gages, Digimatic indicators, linear gages and lever gage heads that use various stem diameters and support systems.
- Can directly inspect indicators with a stroke of up to 4 in/100 mm.
- The pointer of the analog indicator is positioned just before the measuring point automatically in the semi-automatic mode.
- Digital indicators equipped with a data output function are checked very efficiently due to spindle positioning at the inspection points and recording of measurement results being under fully automatic control.

IC2000

SPECIFICATIONS

Order No.		64PKA148A
Measuring Range		4 in/100 mm
Resolution		0.4 µin/0.01 µm
Accuracy (20 °C)	vertical orientation	(0.1 + 0.4L/100) µm L=Arbitrary length (mm)
	lateral orientation	(0.15 + 0.6L/100) µm L=Arbitrary length (mm)
Feed speed		Maximum 10 mm/s
Drive method		Motor drive (semi-automatic/fully-automatic)
Measuring Unit		Separate type Linear Encoder
Measurement method		Semi-automatic measurement
		Fully automatic measurement (only when using an indicator equipped with data output function)*1*2
Mass		20 kg
Operating temperature		20° C±0.5° C
Remarks		with 8 mm bushing and 3/8 in bushing

*1 Automatic measurement requires the indicator's connection cable. Additionally some form of indicator, along with the normally connected accessory (the optional accessory for the indicator such as a Digimatic power-supply unit in an EF counter) will be required.
*2 The indicator measured via RS-232C has the capability to receive data from the main unit and output the counter value.
Recommended PC Part No. **PMICPU004** (PC) & **PMIMON003** (monitor)

Dial Indicators

Dial Test Indicators

Digimatic Indicators

Linear Gages

Bore Gages

Lever Gage Heads

DIMENSIONS

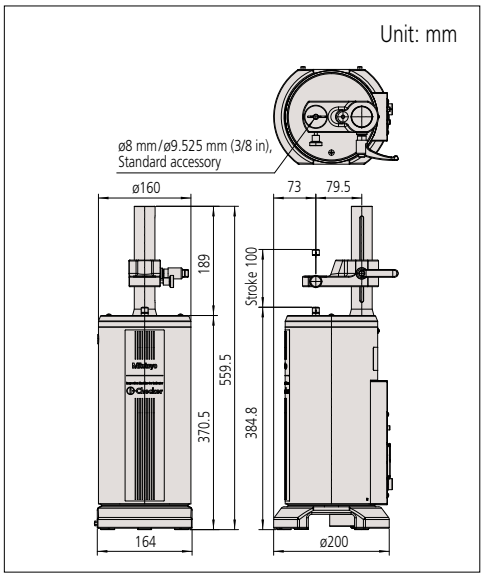

Functions

Semi-Automatic Inspection of Analog Indicator

The pointer of the analog indicator is positioned just before the measuring point automatically via Mitutoyo's Semi-automatic Measurement function. After that, inspection begins simply by adjusting the pointer position with the jog-dial. Because of this function, measurement time is reduced and user fatigue is practically eliminated. Additionally all functions necessary for inspection are combined in the control box so that the operator need not rely on excessive eye movement to adjust the pointer.

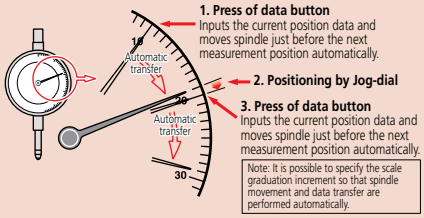

Fully Automatic Inspection of Digital Indicator

The Automatic Measurement function, in tandem with a digital indicator, makes the spindle move so that measurement data is acquired automatically. Therefore, manual adjustment to the measurement position is unnecessary and the efficiency of every inspection is enhanced.

Create and Printout a Simplified Inspection Certificate

Create, edit and print your own inspection certificate. Data can be saved as a CSV file.

Optional Accessories

02ASK000: Test indicator attachment set (ø6mm stem)
02ASK180: Test indicator attachment set (ø8mm stem)
02ASK370: Test indicator holder (ø6mm stem)
02ASK380: Test indicator holder (ø8mm stem)
02ASU162: CG accessory set (type C) for bore gages*
21CZB128: ø6mm dovetail grooved stem
21CZB129: ø8mm dovetail grooved stem
02ASK040: Stem bushing ø6mm
02ASJ856: Stem bushing ø8mm
02ASK150: Stem bushing ø8mm, short
02ASL150: Stem bushing ø10, short
02ASK050: Bushing ø9.5 (Requires **02ASK070**)
02ASK060: Stem bushing ø12mm
02ASK070: Stem bushing ø15mm
02ASK080: Stem bushing ø20mm
02ASK710: Stem bushing ø28mm
02ASK090: Stem bushing 3/8"
02ASK130: Stem bushing case
02ASK730: Reflector
937179T: Foot switch

* Not compatible with IC1000 models

Product catalog E12015

Video

Indicator Calibration

SERIES 170 — UDT-2 Calibration Tester

- **UDT-2** is an accuracy tester for .001 in, .0005, 0.01 mm in graduation dial indicators, dial test indicators and bore gages.
- With the optional stand, inspection of dial bore gages becomes possible.
- Measuring range: 0 to 1 in/ 0 to 25 mm. Accepts 1/4 in, 3/8 in, ø6 mm and ø8 mm indicator stems.

170-102-12

Typical Application

Stand for bore gage inspection (**12AAK824**)

Optional Accessory

Stand for bore gage inspection (**12AAK824**)
Note: Can be used for the inspection of bore gages SERIES **511** standard type and with micrometer head up to 400 mm. (Refer to pages C-35 to C-50 for details.)

SPECIFICATIONS

Inch

Order No.	Micrometer head Graduation (in)	Micrometer head Range (in)	Accuracy	Hysteresis
170-101-10	0.0001	0 - 1	±0.0001	0.00002

Metric

Order No.	Micrometer head Graduation (mm)	Micrometer head Range (mm)	Accuracy	Hysteresis
170-102-12	0.001	0 - 25	±2	0.5

SERIES 521 — Calibration Tester

- Accuracy tester for .0005 in, .0001 in, 0.01 mm graduation dial indicators and dial test indicators.
  Can also be used to adjust the sensitivity of electronic micrometers.
- Universal bracket accepts any dial indicator, dial test indicator or electronic gage without any additional accessory.
  Clamping capacity: ø4mm - ø10mm / .157″- .394″ dia.

Calibrating a Dial Test Indicator

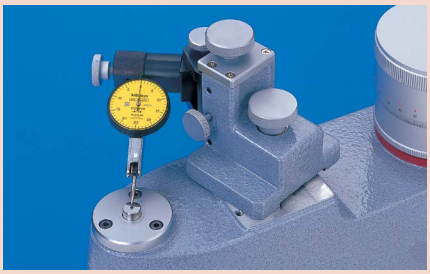

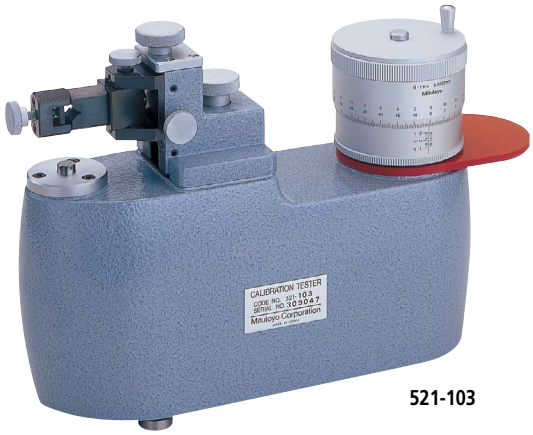

521-103

SPECIFICATIONS

Inch

Order No.	Micrometer head Graduation (in)	Micrometer head Range (in)	Accuracy	Hysteresis
521-104	0.00001	0 - 0.05	±0.00001	0.00001
521-106	0.00001	0 - 0.2	±0.00003	0.00003

Metric

Order No.	Micrometer head Graduation (mm)	Micrometer head Range (mm)	Accuracy	Hysteresis
521-103	0.0002	0 - 1	±0.2	0.2
521-105	0.0002	0 - 5	±0.8	0.8

Find a Distributor

Digital Indicator Applications

MeasurLink ENABLED
Data Management Software by Mitutoyo

Thickness Gages
SERIES 547

Standard Type (Resolution: 0.0005 in)

- Thickness gages can quickly measure the thickness of thin products such as paper and felt.
- Using a ceramic contact and anvil, there is no need to worry about rust. (except for **547-400A**)

547-301A

547-321A

- Display: 6-digit display, sign (7-digit for models with 0.0005 mm resolution)
- Power source: CR2032 battery (1 pc.), **64PTS301** included as standard (for operational checks)
- Zero-setting (INC system)
- Presetting (ABS system)
- Measuring direction switching
- Tolerance judgment
- Function Lock
- Calibration schedule warning function
- Data output
- Display value holding (when no external device is connected)
- 330° rotary display
- Low battery voltage alarm display
- Error alarm display

SPECIFICATIONS

Inch / Metric

Order No.	Resolution	Range (in)	Measuring depth	Contact point, Anvil	Parallelism of Contact point, Anvil
547-526S*	0.0001 in/0.001 mm	0 - 0.47	1.18 in (30 mm)	ø0.39 in (ø10 mm) Flat	0.0002 in/0.005 mm
547-300A	0.0005 in/0.01 mm	0 - 0.4	1.18 in (30 mm)	ø0.39 in (ø10 mm) Flat	0.005 in/0.01 mm
547-500S*	0.0005 in/0.01 mm	0 - 0.47	1.18 in (30 mm)	ø0.39 in (ø10 mm) Flat	0.005 in/0.01 mm
547-320A	0.0005 in/0.01 mm	0 - 0.4	4.72 in (120 mm)	ø0.39 in (ø10 mm) Flat	0.005 in/0.01 mm
547-520S*	0.0005 in/0.01 mm	0 - 0.47	4.72 in (120 mm)	ø0.39 in (ø10 mm) Flat	0.005 in/0.01 mm

Order No.	Accuracy	Measuring force (N)	Mass (g)	Remarks
547-526S*	±0.0002 in/±5 µm	1.5 or less	225	Standard, ceramic point/anvil
547-300A	±0.001 in/±20 µm	1.5 or less	245	Standard, ceramic point/anvil
547-500S*	±0.001 in/±20 µm	1.5 or less	225	Standard, ceramic point/anvil
547-320A	±0.001 in/±20 µm	1.5 or less	385	Deep throat, ceramic point/anvil
547-520S*	±0.001 in/±20 µm	1.5 or less	380	Deep throat, ceramic point/anvil

* Using **ID-SX** Digimatic indicator.

Metric

Order No.	Resolution (mm)	Range (mm)	Measuring depth (mm)	Contact point, Anvil (mm)	Parallelism of Contact point, Anvil (µm)
547-301A	0.01	0 - 10	30	ø10 Flat	10
547-321A	0.01	0 - 10	120	ø10 Flat	10

Order No.	Accuracy (µm)	Measuring force (N)	Mass (g)	Remarks
547-301A	±20	1.5 or less	245	Standard, ceramic point/anvil
547-321A	±20	1.5 or less	385	Deep throat, ceramic point/anvil

DIMENSIONS

547-301A, 547-526S, 547-300A, 547-500S

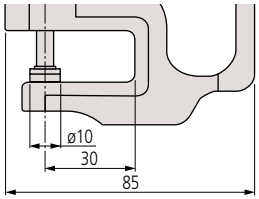

547-321A, 547-320A, 547-520S

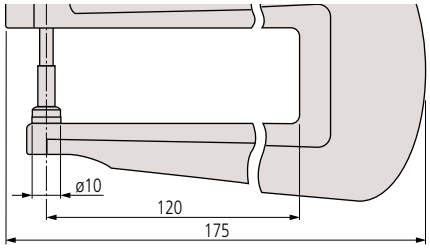

Unit: mm

Optional Output Devices (ID-C Type)

Order No.	Description
Wired	
264-020	USB Input tool (**IT-020U**)
- 06AGL011	Connecting Cable (**1m**)
- 06AGL021	Connecting Cable (**2m**)
06AGQ001F	USB Input Tool Direct (**2m**)
Wireless	
264-622	Transmitter (**IP67**)
264-626	Transmitter (**IP67, Bluetooth**)
264-623	Transmitter (**Buzzer**)
264-627	Transmitter (**Buzzer, Bluetooth**)
- 02AZF700	Connecting Unit (**Adapter**)
- 02AZG021	Connecting Cable (**foot switch compatible**)

Note: Model uses connector type "SF"

Optional Output Devices (ID-SX Type)

Order No.	Description
Wired	
264-020	USB Input tool (**IT-020U**)
- 905338	Connecting Cable (**1m**)
- 905409	Connecting Cable (**2m**)
06AFM380F	USB Input Tool Direct (**2m**)
Wireless	
264-622	Transmitter (**IP67**)
264-626	Transmitter (**IP67, Bluetooth**)
264-623	Transmitter (**Buzzer**)
264-627	Transmitter (**Buzzer, Bluetooth**)
- 02AZF670	Transmitter Mounting Bracket
- 02AZD790F	Connecting Cable
- 02AZE140F	Connecting Cable (**foot switch compatible**)

Note: Model uses connector type "F"

- Measurement Data Management **USB-ITPAK V3.0**: **06AGR543** (Refer to Section A)

Got Questions?

F

Digital Indicator Applications

Optional Output Devices

Order No.	Description
Wired	
264-020	USB Input tool (**IT-020U**)
- 06AGL011	Connecting Cable (**1m**)
- 06AGL021	Connecting Cable (**2m**)
06AGQ001F	USB Input Tool Direct (**2m**)
Wireless	
264-622	Transmitter (**IP67**)
264-626	Transmitter (**IP67, Bluetooth**)
264-623	Transmitter (**Buzzer**)
264-627	Transmitter (**Buzzer, Bluetooth**)
- 02AZF700	Connecting Unit (**Adapter**)
- 02AZG021	Connecting Cable (**foot switch compatible**)

Note: Model uses connector type "SF"

High Accuracy Type (Resolution: 0.00002 in)

547-401A

SPECIFICATIONS

Inch / Metric

Order No.	Resolution	Range (in)	Measuring depth	Contact point, Anvil	Parallelism of Contact point, Anvil
547-400A	0.00002/0.00005/ 0.0001/0.0005 in 0.0005/0.001/ 0.01 mm (selectable)	0 - 0.47	0.83 in (21 mm)	ø0.25 in (ø6.3 mm) Flat	0.0001 in/0.003 mm

Order No.	Accuracy	Measuring force (N)	Mass (g)	Remarks
547-400A	±0.00012 in/±3 µm	3.5 or less	275	High accuracy, carbide point anvil

Metric

Order No.	Resolution (mm)	Range (mm)	Measuring depth (mm)	Contact point, Anvil (mm)	Parallelism of Contact point, Anvil (µm)
547-401A	0.0005 (0.001/0.01 selectable)	0 - 12	21	ø6.3 Flat (Carbide)	3

Order No.	Accuracy (µm)	Measuring force (N)	Mass (g)	Remarks
547-401A	±3	3.5 or less	275	High accuracy, carbide point anvil

DIMENSIONS

547-401A, 547-400A

Unit: mm

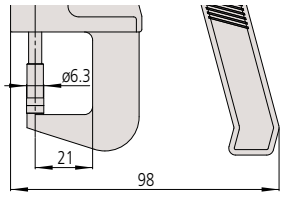

F

Dial Indicator Applications

Thickness Gages
SERIES 7

Standard Type (Graduation: 0.0005 in)

- Integrated moulding of the bezel and crystal ensures protection against water and oil penetration via the front face.

7301A

7321A

SPECIFICATIONS

Inch

Order No.	Graduation (in)	Range (in)	Measuring depth (in)	Contact point, Anvil (in)	Parallelism of Contact point, Anvil (in)
7326A	0.0001	0 - 0.05	1.18	ø0.39 Flat	0.0002
7300A	0.001	0 - 0.5	1.18	ø0.39 Flat	0.0005
7304A	0.001	0 - 1	1.18	ø0.39 Flat	0.0005
7322A	0.001	0 - 1	4.72	ø0.39 Flat	0.0005

Order No.	Accuracy (in)	Measuring force (N)	Mass (g)	Remarks
7326A	±0.0002	2.0 or less	205	Fine dial reading, ceramic point/anvil
7300A	±0.001	1.8 or less	205	Standard, ceramic point/anvil
7304A	±0.002	1.8 or less	220	Standard, ceramic point/anvil
7322A	±0.002	1.8 or less	370	Deep throat, ceramic point/anvil

Metric

Order No.	Graduation (mm)	Range (mm)	Measuring depth (mm)	Contact point, Anvil (mm)	Parallelism of Contact point, Anvil (µm)
7327A	0.001	0 - 1	30	ø10 Flat	5
7301A	0.01	0 - 10	30	ø10 Flat	5
7305A	0.01	0 - 20	30	ø10 Flat	5
7321A	0.01	0 - 10	120	ø10 Flat	5
7323A	0.01	0 - 20	120	ø10 Flat	5

Order No.	Accuracy (µm)	Measuring force (N)	Mass (g)	Remarks
7327A	±5	1.5 or less	225	Fine dial reading, ceramic point/anvil
7301A	±15	1.4 or less	205	Standard, ceramic point/anvil
7305A	±20	2.0 or less	220	Standard, ceramic point/anvil
7321A	±15	1.4 or less	370	Deep throat, ceramic point/anvil
7323A	±22	2.0 or less	370	Deep throat, ceramic point/anvil

Note: The dial indicator needs to be reset when a contact point is replaced.

DIMENSIONS

7301A, 7305A, 7327A

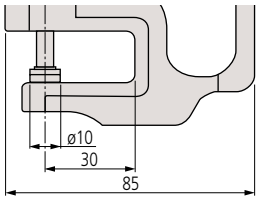

7321A, 7322A, 7323A

Unit: mm

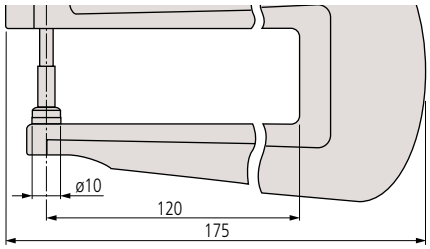

Talk to Sales

Dial/Digital Indicator Applications

Typical Applications

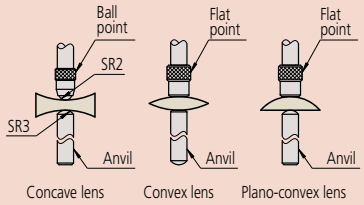

- Display: 6-digit display, sign
- Power source: CR2032 battery (1 pc.), **64PTS301** included as standard (for operational checks)
- Zero-setting (INC system)
- Presetting (ABS system)
- Measuring direction switching
- Tolerance judgment
- Function Lock
- Calibration schedule warning function
- Data output
- Display value holding (when no external device is connected)
- 330° rotary display
- Low battery voltage alarm display
- Error alarm display

Optional Output Devices (ID-C Type)

Order No.	Description
Wired	
264-020	USB Input tool (**IT-020U**)
- 06AGL011	Connecting Cable (**1m**)
- 06AGL021	Connecting Cable (**2m**)
06AGQ001F	USB Input Tool Direct (**2m**)
Wireless	
264-622	Transmitter (**IP67**)
264-626	Transmitter (**IP67, Bluetooth**)
264-623	Transmitter (**Buzzer**)
264-627	Transmitter (**Buzzer, Bluetooth**)
- 02AZF700	Connecting Unit (**Adapter**)
- 02AZG021	Connecting Cable (**foot switch compatible**)

Note: Model uses connector type "SF"

Optional Output Devices (ID-SX Type)

Order No.	Description
Wired	
264-020	USB Input tool (**IT-020U**)
- 905338	Connecting Cable (**1m**)
- 905409	Connecting Cable (**2m**)
06AFM380F	USB Input Tool Direct (**2m**)
Wireless	
264-622	Transmitter (**IP67**)
264-626	Transmitter (**IP67, Bluetooth**)
264-623	Transmitter (**Buzzer**)
264-627	Transmitter (**Buzzer, Bluetooth**)
- 02AZF670	Transmitter Mounting Bracket
- 02AZD790F	Connecting Cable
- 02AZE140F	Connecting Cable (**foot switch compatible**)

Note: Model uses connector type "F"

- Measurement Data Management **USB-ITPAK V3.0**: **06AGR543** (Refer to Section A)

Lens Thickness Measurement

- Thickness of concave-convex lenses and surfaces can be measured. (Contact point, Anvil: hardened steel)
- Anvils and contact points are interchangeable to enable concave surfaces to be measured.
- Provided with a ball point as standard.

547-313A **7313A**

SPECIFICATIONS

Inch / Metric

Order No.	Resolution	Range (in)	Measuring depth	Contact point, Anvil	Parallelism of Contact point, Anvil
547-312A	0.0005 in/0.01 mm	0 - 0.4	1.18 in (30 mm)	ø6 mm (ø0.24 in) Flat (Contact point) ø4.8 mm (ø0.19 in) Flat(Anvil)	0.005 in/0.01 mm
547-512A*	0.0005 in/0.01 mm	0 - 0.47	1.18 in (30 mm)	ø6 mm (ø0.24 in) Flat (Contact point) ø4.8 mm (ø0.19 in) Flat (Anvil)	0.005 in/0.01 mm

Order No.	Accuracy	Measuring force (N)	Mass (g)	Remarks
547-312A	±0.001 in/±20 µm	1.5 or less	265	Lens thickness
547-512A*	±0.001 in/±20 µm	1.5 or less	240	Lens thickness

* Using **ID-SX** Digimatic indicator.

Metric

Order No.	Resolution (mm)	Range (mm)	Measuring depth (mm)	Contact point, Anvil (mm)	Parallelism of Contact point, Anvil (µm)
547-313A	0.01	0 - 10	30	ø6 Flat (Contact point) ø4.8 Flat (Anvil)	12

Order No.	Accuracy (µm)	Measuring force (N)	Mass (g)	Remarks
547-313A	±20	1.5 or less	265	Lens thickness

Inch

Order No.	Graduation (in)	Range (in)	Measuring depth (in)	Contact point, Anvil (in)	Parallelism of Contact point, Anvil (in)
7312A	0.001	0 - 0.5	1.18	ø0.24 Flat (Contact point) ø0.19 Flat (Anvil)	0.0005

Order No.	Accuracy (in)	Measuring force (N)	Mass (g)	Remarks
7312A	±0.001	1.8 or less	215	Lens thickness

Metric

Order No.	Graduation (mm)	Range (mm)	Measuring depth (mm)	Contact point, Anvil (mm)	Parallelism of Contact point, Anvil (µm)
7313A	0.01	0 - 10	30	ø6 Flat (Contact point) ø4.8 Flat (Anvil)	5

Order No.	Accuracy (µm)	Measuring force (N)	Mass (g)	Remarks
7313A	±15	1.4 or less	215	Lens thickness

Note: The dial indicator needs to be reset when a contact point is replaced.

DIMENSIONS

Unit: mm

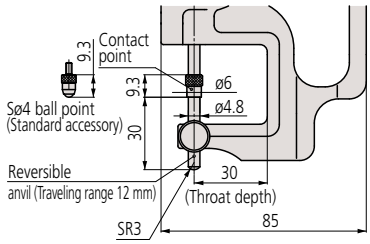

Dial/Digital Indicator Applications

MeasurLink ENABLED
Data Management Software by Mitutoyo

Thickness Gages
SERIES 547, 7

Pipe Gage Measurement

- Pipe wall thickness, thickness of curved boards can be measured. (Contact point, Anvil: hardened steel)

547-360A

7360A

- Display: 6-digit display, sign
- Power source: CR2032 battery (1 pc.), **64PTS301** included as standard (for operational checks)
- Zero-setting (INC system)
- Presetting (ABS system)
- Measuring direction switching
- Tolerance judgment
- Function Lock
- Calibration schedule warning function
- Data output
- Display value holding (when no external device is connected)
- 330° rotary display
- Low battery voltage alarm display
- Error alarm display

SPECIFICATIONS

Inch / Metric

Order No.	Resolution	Range (in)	Measuring depth	Contact point, Anvil
547-361A	0.0005 in/0.01 mm	0 - 0.4	0.79 in (20 mm)	ø3 mm (ø0.12 in) Flat (Contact point) ø3.5 mm (ø0.14 in) Ball (Anvil)
547-561S*	0.0005 in/0.01 mm	0 - 0.47	0.79 in (20 mm)	ø3 mm (ø0.12 in) Flat (Contact point) ø3.5 mm (ø0.14 in) Ball (Anvil)

Order No.	Accuracy	Measuring force (N)	Mass (g)	Remarks
547-361A	±0.001 in/±20 µm	1.5 or less	230	Pipe gage
547-561S*	±0.001 in/±20 µm	1.5 or less	215	Pipe gage

* Using **ID-SX** Digimatic indicator.

Metric

Order No.	Resolution (mm)	Range (mm)	Measuring depth (mm)	Contact point, Anvil (mm)
547-360A	0.01	0 - 10	20	ø3 Flat (Contact point) ø3.5 Ball (Anvil)

Order No.	Accuracy (µm)	Measuring force (N)	Mass (g)	Remarks
547-360A	±20	1.5 or less	230	Pipe gage

Inch

Order No.	Graduation (in)	Range (in)	Measuring depth (in)	Contact point, Anvil (in)
7361A	0.001	0 - 0.5	0.8	ø0.12 Flat (Contact point) ø0.14 Ball (Anvil)

Order No.	Accuracy (in)	Measuring force (N)	Mass (g)	Remarks
7361A	±0.001	1.8 or less	200	Pipe gage

Metric

Order No.	Graduation (mm)	Range (mm)	Measuring depth (mm)	Contact point, Anvil (mm)
7360A	0.01	0 - 10	20	ø3 Flat (Contact point) ø3.5 Ball (Anvil)

Order No.	Accuracy (µm)	Measuring force (N)	Mass (g)	Remarks
7360A	±15	1.4 or less	200	Pipe gage

Note: The dial indicator needs to be reset when a contact point is replaced.

DIMENSIONS

Unit: mm

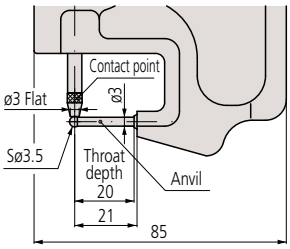

Optional Output Devices (ID-C Type)

Order No.	Description
Wired	
264-020	USB Input tool (**IT-020U**)
- 06AGL011	Connecting Cable (**1m**)
- 06AGL021	Connecting Cable (**2m**)
06AGQ001F	USB Input Tool Direct (**2m**)
Wireless	
264-622	Transmitter (**IP67**)
264-626	Transmitter (**IP67, Bluetooth**)
264-623	Transmitter (**Buzzer**)
264-627	Transmitter (**Buzzer, Bluetooth**)
- 02AZF700	Connecting Unit (**Adapter**)
- 02AZG021	Connecting Cable (**foot switch compatible**)

Note: Model uses connector type "SF"

Optional Output Devices (ID-SX Type)

Order No.	Description
Wired	
264-020	USB Input tool (**IT-020U**)
- 905338	Connecting Cable (**1m**)
- 905409	Connecting Cable (**2m**)
06AFM380F	USB Input Tool Direct (**2m**)
Wireless	
264-622	Transmitter (**IP67**)
264-626	Transmitter (**IP67, Bluetooth**)
264-623	Transmitter (**Buzzer**)
264-627	Transmitter (**Buzzer, Bluetooth**)
- 02AZF670	Transmitter Mounting Bracket
- 02AZD790F	Connecting Cable
- 02AZE140F	Connecting Cable (**foot switch compatible**)

Note: Model uses connector type "F"

- Measurement Data Management **USB-ITPAK V3.0**: **06AGR543** (Refer to Section A)

Need Repair?

F

Dial/Digital Indicator Applications

- Display: 6-digit display, sign
- Power source: CR2032 battery (1 pc.), included as standard (for operational checks)
- Zero-setting (INC system)
- Presetting (ABS system)
- Measuring direction switching
- Tolerance judgment
- Function Lock
- Calibration schedule warning function
- Data output
- Display value holding (when no external device is connected)
- 330° rotary display
- Low battery voltage alarm display
- Error alarm display

Optional Output Devices (ID-C Type)

Order No.	Description
Wired	
264-020	USB Input tool (**IT-020U**)
- 06AGL011	Connecting Cable (**1m**)
- 06AGL021	Connecting Cable (**2m**)
06AGQ001F	USB Input Tool Direct (**2m**)
Wireless	
264-622	Transmitter (**IP67**)
264-626	Transmitter (**IP67, Bluetooth**)
264-623	Transmitter (**Buzzer**)
264-627	Transmitter (**Buzzer, Bluetooth**)
- 02AZF700	Connecting Unit (**Adapter**)
- 02AZG021	Connecting Cable (**foot switch compatible**)

Note: Model uses connector type "SF"

Optional Output Devices (ID-SX Type)

Order No.	Description
Wired	
264-020	USB Input tool (**IT-020U**)
- 905338	Connecting Cable (**1m**)
- 905409	Connecting Cable (**2m**)
06AFM380F	USB Input Tool Direct (**2m**)
Wireless	
264-622	Transmitter (**IP67**)
264-626	Transmitter (**IP67, Bluetooth**)
264-623	Transmitter (**Buzzer**)
264-627	Transmitter (**Buzzer, Bluetooth**)
- 02AZF670	Transmitter Mounting Bracket
- 02AZD790F	Connecting Cable
- 02AZE140F	Connecting Cable (**foot switch compatible**)

Note: Model uses connector type "F"

- Measurement Data Management **USB-ITPAK V3.0**: **06AGR543** (Refer to Section A)

Blade Thickness Measurement

- Measuring faces of the contact point and anvil are blade-shaped (thickness: 1 mm). Suitable for measuring narrow grooves.

547-315A **7315A**

SPECIFICATIONS

Inch / Metric

Order No.	Resolution	Range (in)	Measuring depth	Contact point, Anvil	Parallelism of Contact point, Anvil
547-316A	0.0005 in/0.01 mm	0 - 0.4	1.18 in (30 mm)	t=1 mm (0.04 in) Blade	0.005 in/0.01 mm
547-516A*	0.0005 in/0.01 mm	0 - 0.47	1.18 in (30 mm)	t=1 mm (0.04 in) Blade	0.005 in/0.01 mm

Order No.	Accuracy	Measuring force (N)	Mass (g)	Remarks
547-316A	±0.001 in/±20 µm	1.5 or less	260	Blade thickness
547-516A*	±0.001 in/±20 µm	1.5 or less	240	Blade thickness

* Using **ID-SX** Digimatic indicator.

Metric

Order No.	Resolution (mm)	Range (mm)	Measuring depth (mm)	Contact point, Anvil (mm)	Parallelism of Contact point, Anvil (µm)
547-315A	0.01	0 - 10	30	t=1 Blade	10

Order No.	Accuracy (µm)	Measuring force (N)	Mass (g)	Remarks
547-315A	±20	1.5 or less	260	Blade thickness

Inch

Order No.	Graduation (in)	Range (in)	Measuring depth (in)	Contact point, Anvil (in)	Parallelism of Contact point, Anvil (in)
7316A	0.001	0 - 0.5	1.18	t=0.04 Blade	0.0005

Order No.	Accuracy (in)	Measuring force (N)	Mass (g)	Remarks
7316A	±0.001	1.8 or less	220	Blade thickness

Metric

Order No.	Graduation (mm)	Range (mm)	Measuring depth (mm)	Contact point, Anvil (mm)	Parallelism of Contact point, Anvil (µm)
7315A	0.01	0 - 10	30	t=1 Blade	5

Order No.	Accuracy (µm)	Measuring force (N)	Mass (g)	Remarks
7315A	±15	1.4 or less	220	Blade thickness

Note: The dial indicator needs to be reset when a contact point is replaced.

DIMENSIONS

Unit: mm

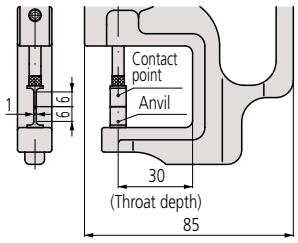

F

Digimatic Caliper Gages

Internal Tube Thickness Measurement SERIES 209

Versatile ID measuring gages for hole diameters, groove thickness, tube diameter and hard-to-reach dimensions. The Digimatic Caliper Gages provide error-free LCD readings, as well as data output for SPC analysis.

Internal measurement type

209-936

Technical Data

Display: LCD Analog / Digital
Power Supply: AAA Battery (2 pcs.)
Dust/Water protection level: IP67

Function

Zeroset, Preset, Auto power off, Inch/Metric, Conversion data hold, Max/Min value holding, Data output

Optional Output Devices

Order No.	Description
Wired	
KPL1961-09	Interface Adapter (**Required**)
264-020	USB Input tool (**IT-020U**)
- 937387	Connecting Cable (**1m**)
- 965013	Connecting Cable (**2m**)
06AFM380E	USB Input Tool Direct (**2m**)
Wireless	
KPL1961-09	Interface Adapter (**Required**)
264-626	Transmitter (**IP67**)
264-623	Transmitter (**Buzzer**)
- 02AZD790E	Connecting Cable
- 02AZE140E	Connecting Cable (**foot switch compatible**)
KPL1961-13	Interface Adapter (**Bluetooth**)

Note: Model uses connector type "E"

SPECIFICATIONS

Inch / Metric

F

Order No.	Range	Resolution	Accuracy	Measuring Depth (L)	Groove Depth (A)	Groove Width (B)	Measuring Contacts	Measuring Force (N)	Fig. Reference
209-934	0.09-0.49" / 2.5-12.5mm	10 Steps (switchable)*1	0.0008" / 0.015mm	0.47" / 12mm	.27" / 0.7mm	.02" / 0.4mm	Chisel R .0039"/ 0.1mm	0.8-1.2	A
209-935	0.19-0.59" / 5-15mm		0.0008" / 0.015mm	1.37" / 35mm	.09" / 2.3mm	.03" / 0.8mm	Ball .024"/ 0.6mm dia.	0.8-1.2	B
209-936	0.39-1.18" / 10-30mm		0.0015" / 0.03mm	3.34" / 85mm	.19" / 5.2mm	.05" / 1.2mm	Ball .04"/ 1mm dia.	1.1-1.6	B
209-937	0.78-1.57" / 20-40mm		0.0015" / 0.03mm	3.34" / 85mm	.26" / 7.0mm	.05" / 1.2mm	Ball .04"/ 1mm dia.	1.1-1.6	C
209-938	1.18-1.96" / 30-50mm		0.0015" / 0.03mm	3.34" / 85mm	.26" / 7.0mm	.05" / 1.2mm	Ball .04"/ 1mm dia.	1.1-1.6	C
209-939	1.57-2.36" / 40-60mm		0.0015" / 0.03mm	3.34" / 85mm	.31" / 8.3mm	.05" / 1.2mm	Ball .04"/ 1mm dia.	1.1-1.6	D
209-940	1.96-2.75" / 50-70mm		0.0015" / 0.03mm	3.34" / 85mm	.31" / 8.3mm	.05" / 1.2mm	Ball .04"/ 1mm dia.	1.1-1.6	D
209-941	2.36-3.14" / 60-80mm		0.0015" / 0.03mm	3.34" / 85mm	.31" / 8.3mm	.05" / 1.2mm	Ball .04"/ 1mm dia.	1.1-1.6	D
209-942	2.75-3.54" / 70-90mm		0.0015" / 0.03mm	3.34" / 85mm	.31" / 8.3mm	.05" / 1.2mm	Ball .04"/ 1mm dia.	1.1-1.6	D
209-944	0.51-1.69" / 13-43mm		0.0015" / 0.04mm	5.00" / 127mm	.22" / 5.7mm	.06" / 1.5mm	Ball Ø.05"/1.3mm	1.2-1.7	B
209-945	0.59-2.55" / 15-65mm		0.0020" / 0.05mm	7.40" / 188mm	.21" / 5.5mm	.07" / 1.9mm	Ball Ø.06"/1.5mm	1.0-1.8	C
209-946	1.18-2.36" / 30-60mm		0.0015" / 0.04mm	5.19" / 132mm	.24" / 6.2mm	.07" / 1.8mm	Ball Ø.06"/1.5mm	1.2-1.7	D
209-947	1.96-3.14" / 50-80mm		0.0015" / 0.04mm	5.19" / 132mm	.33" / 8.3mm	.09" / 2.4mm	Ball Ø.08"/2mm	1.2-1.7	D
209-948	2.75-3.93" / 70-100mm		0.0015" / 0.04mm	5.19" / 132mm	.33" / 8.3mm	.09" / 2.4mm	Ball Ø.08"/2mm	1.2-1.7	D
209-949	3.54-4.72" / 70-100mm		0.0015" / 0.04mm	5.19" / 132mm	.33" / 8.3mm	.09" / 2.4mm	Ball Ø.08"/2mm	1.2-1.7	D
209-950	1.57-3.54" / 40-90mm		0.0020" / 0.05mm	7.55" / 192mm	.33" / 8.3mm	.09" / 2.4mm	Ball Ø.08"/2mm	1.0-1.8	D

• Power Source: AAA Batteries (2 pcs)
*1 See Resolution Table

• Resolution Switching*

Resolution (in)	
.0005	.0001
.00001	.001

Resolution (mm)	
0.001	0.01
0.002	0.02
0.005	0.05

A

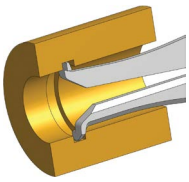

B

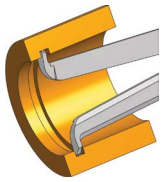

C

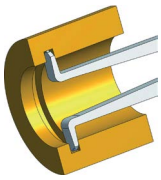

D

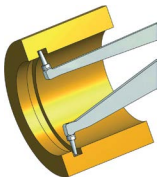

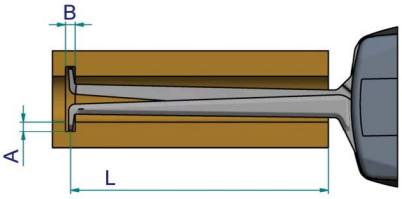

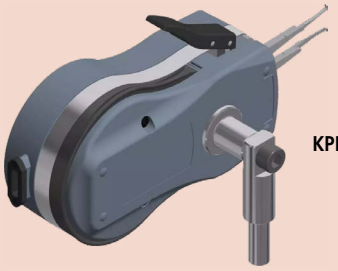

KPL8007-10

Digimatic Caliper Gages

External Tube Thickness Measurement SERIES 209

Versatile OD measuring gages for groove thickness, tube thickness and hard-to-reach dimensions. Digimatic Caliper Gages provide error-free LCD readings, as well as data output for SPC analysis.

Technical Data

Display: LCD Analog / Digital
Power Supply: AAA Battery (2 pcs.)
Dust/Water protection level: IP67

Function

Zeroset, Preset, Auto power off, Inch/Metric, Conversion data hold, Max/Min value holding, Data output

External measurement type

209-932

SPECIFICATIONS

Inch / Metric

Order No.	Range	Resolution	Accuracy	Measuring Depth (L)	Moveable (Hb)	Fixed (Hf)	Measuring Contacts	Measuring Force (N)	Fig. Reference
209-930	0-0.39" / 0-10mm	10 Steps (switchable)*1	0.0008" / 0.02mm	1.37" / 35mm	.75" / 19.1mm	.73" / 18.6mm	Ball .059"/1.5mm dia.	1.2-1.6	A
209-931	0-0.39" / 0-10mm		0.0010" / 0.02mm	1.37" / 35mm	.85" / 21.7mm	.58" / 14.8mm	Desc .24"/ 6mm dia.	0.8-1.2	C
209-932	0-0.78" / 0-20mm		0.0015" / 0.03mm	3.34" / 85mm	.97" / 24.7mm	.97" / 24.6mm	Ball .059"/1.5mm dia.	1.1-1.6	A
209-933	0-0.78" / 0-20mm		0.0015" / 0.03mm	3.34" / 85mm	.97" / 24.7mm	.10" / 2.5mm	Ball .059"/1.5mm dia.	1.1-1.6	B
209-951	0-1.18" / 0-30mm		0.0015" / 0.04mm	4.48" / 114mm	1.2" / 30mm	1.2" / 30mm	Ball Ø.12"/3mm	0.9-1.6	A
209-952	0-1.18" / 0-30mm		0.0015" / 0.04mm	4.48" / 114mm	1.2" / 30mm	.16" / 4mm	Ball Ø.12"/3mm	0.9-1.6	B
209-953	0-1.18" / 0-30mm		0.0025" / 0.05mm	4.48" / 114mm	1.4" / 36mm	.94" / 24mm	Disc Ø1.97"/50mm	0.9-1.6	D
209-954	0-1.96" / 0-50mm		0.0020" / 0.05mm	6.57" / 167mm	1.2" / 30mm	1.2" / 30mm	Ball Ø.12"/3mm	0.8-1.7	A
209-955	0-1.96" / 0-50mm		0.0020" / 0.05mm	6.65" / 169mm	1.2" / 30mm	.17" / 4.3mm	Ball Ø.12"/3mm	0.8-1.7	B
209-956	0-1.96" / 0-50mm		0.0025" / 0.05mm	6.57" / 167mm	1.4" / 36mm	.94" / 24mm	Disc Ø1.97"/50mm	0.8-1.7	D

• Power Source: AAA Batteries (2 pcs)
*1 See Resolution Table

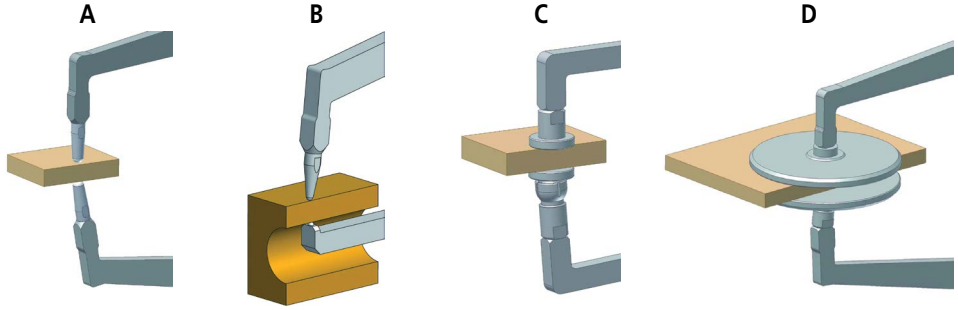

Optional Output Devices

Order No.	Description
Wired	
KPL1961-09	Interface Adapter (**Required**)
264-020	USB Input tool (**IT-020U**)
- 937387	Connecting Cable (**1m**)
- 965013	Connecting Cable (**2m**)
06AFM380E	USB Input Tool Direct (**2m**)
Wireless	
KPL1961-09	Interface Adapter (**Required**)
264-626	Transmitter (**IP67**)
264-623	Transmitter (**Buzzer**)
- 02AZD790E	Connecting Cable
- 02AZE140E	Connecting Cable (**foot switch compatible**)
KPL1961-13	Interface Adapter (**Bluetooth**)

Note: Model uses connector type "E"

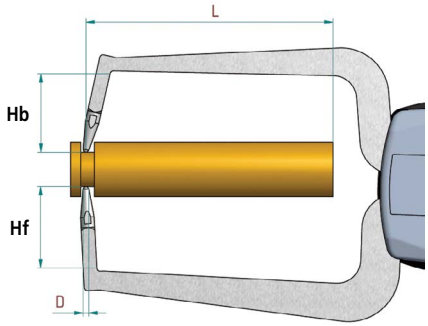

• Resolution Switching*

Resolution (in)	
.0005	.0001
.00001	.001

Resolution (mm)	
0.001	0.01
0.002	0.02
0.005	0.05

F

Dial Caliper Gages

Internal Measurement SERIES 209

The caliper is spring loaded and makes point contact at a constant measuring pressure.

209-300

209-303

DIMENSIONS

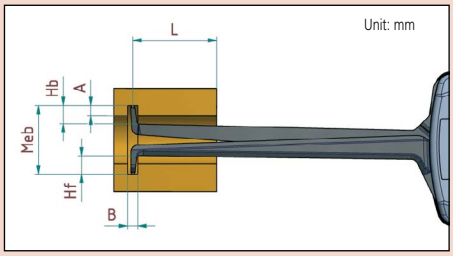

SPECIFICATIONS

Inch

Order No.	Measuring Range	Graduation	Accuracy	Max. Measuring Depth L	Max. Groove Depth A	Min. Groove Width B	Measuring Contact Type	Size (mm)	Mass (g)
209-350	.10 - .50"	.0002"	± .0008"	.47"	.027"	.023"	A	R0.1	200
209-351	.20 - .60"	.0002"	± .0008"	1.37"	.09"	.032"	A	ø0.6	200
209-352	.40 - 1.2"	.0005"	± .0015"	3.3"	.19"	.06"	A	ø1	200
209-354	.80 - 1.6"	.0005"	± .0015"	3.3"	.26"	.06"	A	ø1	200
209-355	1.2 - 2"	.0005"	± .0015"	3.3"	.26"	.06"	A	ø1	200
209-356	1.6 - 2.4"	.0005"	± .0015"	3.3"	.31"	.06"	B	ø1	200
209-357	2 - 2.8"	.0005"	± .0015"	3.3"	.31"	.06"	B	ø1	200
209-358	2.4 - 3.2"	.0005"	± .0015"	3.3"	.31"	.06"	B	ø1	250
209-359	2.8 - 3.6"	.0005"	± .0015"	3.3"	.31"	.06"	B	ø1	250
209-360	3.2 - 4"	.0005"	± .0015"	3.3"	.31"	.06"	B	ø1	250
209-361*	2 - 4"	.0005"	± .0015"	3.3"	.31"	.06"	C	ø1	250
209-362*	3.6 - 5.6"	.0005"	± .0015"	3.3"	.31"	.06"	C	ø1	250
209-363*	5.2 - 7.2"	.0005"	± .0015"	3.3"	.31"	.06"	C	ø1	250

*Interchangeable contact points (additional anvil 4 pcs.) with ball point .04" dia. These Dial Caliper Gages are used only as comparison gages and should be used along with a setting ring or a micrometer.

Metric

Order No.	Measuring Range	Graduation	Accuracy	Max. Measuring Depth L	Max. Groove Depth A	Min. Groove Width B	Measuring Contact Type	Size (mm)	Mass(g)
209-300	2.5 - 12.5mm	0.005mm	±0.015mm	12mm	0.7mm	0.5mm	A	R0.1	155
209-301	5 - 15mm	0.005mm	±0.015mm	35mm	2.3mm	0.8mm	B	ø0.6	160
209-302	10 - 30mm	0.01mm	±0.03mm	85mm	5.2mm	1.2mm	B	ø1	180
209-303	20 - 40mm	0.01mm	±0.03mm	85mm	7mm	1.2mm	B	ø1	180
209-304	30 - 50mm	0.01mm	±0.03mm	85mm	7mm	1.2mm	B	ø1	185
209-305	40 - 60mm	0.01mm	±0.03mm	85mm	8.3mm	1.2mm	B	ø1	195
209-306	50 - 70mm	0.01mm	±0.03mm	85mm	8.3mm	1.2mm	B	ø1	195
209-307	60 - 80mm	0.01mm	±0.03mm	85mm	8.3mm	1.2mm	B	ø1	200
209-308	70 - 90mm	0.01mm	±0.03mm	85mm	8.3mm	1.2mm	B	ø1	200
209-309	80 - 100mm	0.01mm	±0.03mm	85mm	8.3mm	1.2mm	B	ø1	200
209-310*	50 - 100mm	0.01mm	±0.03mm	85mm	8.3mm	1.2mm	C	ø1	220
209-311*	90 - 140mm	0.01mm	±0.03mm	85mm	8.3mm	1.2mm	C	ø1	230
209-312*	130 - 180mm	0.01mm	±0.03mm	85mm	8.3mm	1.2mm	C	ø1	240
209-901	15-65mm	0.05mm	±0.05	188	5	1.9	B	ø1.5mm	355
209-902	40-90mm	0.05mm	±0.05	192	8.5	2.4	B	ø2mm	370
209-903	70-120mm	0.05mm	±0.05	192	8.5	2.4	B	ø2mm	380

*Interchangeable contact point (additional anvil 5pcs.) with ball point 1mm dia These Dial Caliper Gages are used only as comparison gages and should be used along with a setting ring or a micrometer.

A

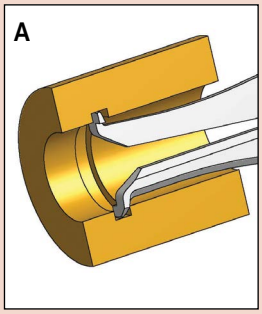

B

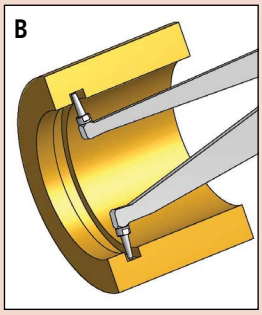

C

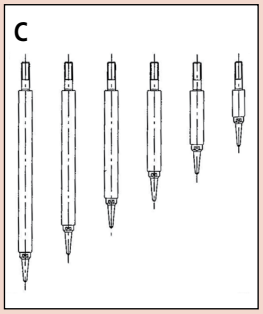

Dial Caliper Gages

External Measurement SERIES 209

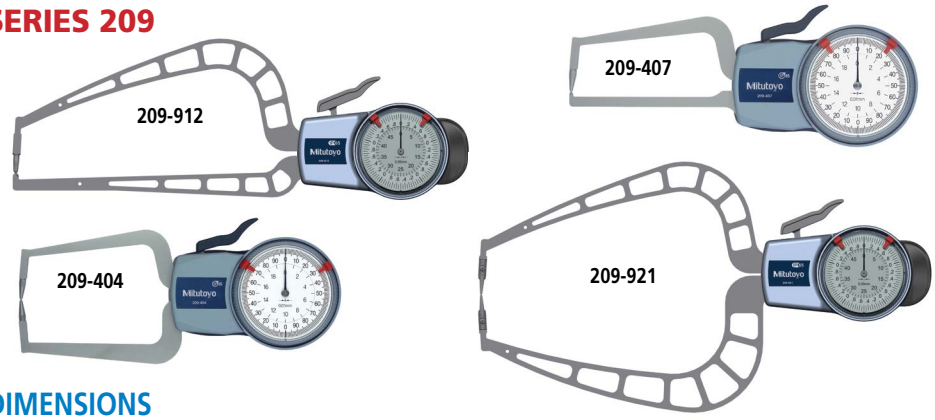

Type of Contact Points

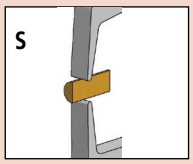

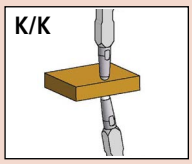

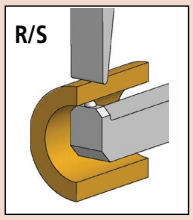

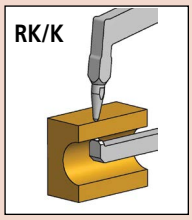

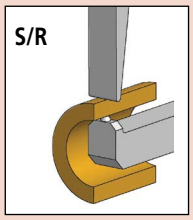

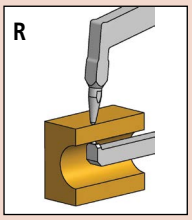

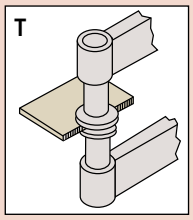

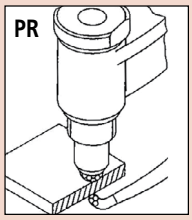

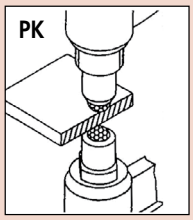

DIMENSIONS

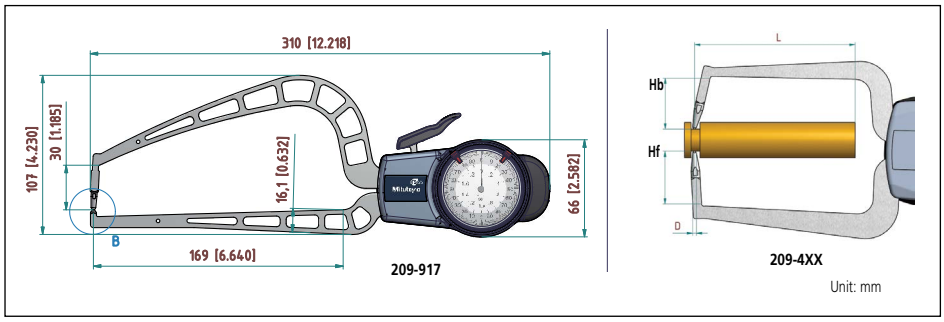

SPECIFICATIONS

Inch

Order No.	Measuring Range	Graduation	Accuracy	Max. Measuring Depth L	Length Hb	Length Hf	Measuring Contact Type	Size (mm)	Mass (g)
209-450	0 - .40"	.0002"	± .0008"	1.37"	.75"	.75"	K/K	ø1.5	170
209-451	0 - .40"	.0002"	±- .001"	1.37"	.85"	.58"	T	ø6	175
209-452	0 - .40"	.0002"	± .0008"	1.37"	.75"	.035"	RK/K	ø1.5	165
209-453	0 - .40"	.0002"	± .0008"	1.37"	.75"	.035"	R/S	Chisel R0.4, ø1.5	165
209-454	0 - .80"	.0005"	±- .0015"	3.2"	.97"	.97"	S	Chisel R0.4	210
209-455	0 - .80"	.0005"	± .0015"	3.2"	.97"	.97"	K/K	ø1.5	210
209-456	0 - .80"	.0005"	± .0015"	3.2"	.97"	.10"	RK/K	ø1.5	200
209-457	0 - .80"	.0005"	± .0015"	3.2"	.97"	.10"	R/S	Chisel R0.4, ø1.5	200
209-916	0 - 2.0"	.001"	± .002"	6.6"	1.2"	1.2"	K/K	ø3	430
209-917	0 - 2.0"	.001"	± .002"	6.6"	1.2"	.18"	RK/K	ø3	400

Metric

Order No.	Measuring Range	Graduation	Accuracy	Max. Measuring Depth L	Length Hb	Length Hf	Measuring Contact Type	Size (mm)	Mass (g)
209-402	0 - 10mm	0.005mm	±0.015mm	35mm	19.1mm	18.6mm	K/K	ø1.5	240
209-403	0 - 10mm	0.005mm	±0.02mm	35mm	21.7mm	14.8mm	T	ø6	175
209-404	0 - 20mm	0.01mm	±0.03mm	85mm	7mm	24.6mm	K/K	ø1.5	210
209-405	0 - 20mm	0.01mm	±0.03mm	85mm	7mm	24.6mm	S	R 0.4	210
209-406	0 - 20mm	0.01mm	±0.03mm	80mm	7mm	2.5mm	R/S	Chisel R0.4, ø1.5	200
209-407	0 - 20mm	0.01mm	±0.03mm	80mm	7mm	2.5mm	RK/K	ø1.5	200
209-603	0 - 10mm	0.1mm	±0.1mm	33mm	-	-	PR	ø2	40
209-911	0 - 50mm	0.05mm	±0.05mm	167mm	30mm	30mm	KK	Ball Ø3mm	430
209-912	0 - 50mm	0.05mm	±0.05mm	169mm	30mm	4.5mm	RK/K	Ball Ø3mm	400
209-921	0 - 50mm	0.05mm	±0.05mm	167mm	30mm	30mm	S	Chisel R0.75	490
209-922	0 - 50mm	0.05mm	±0.05mm	169mm	30mm	4.5mm	R/S	ø3, Chisel R0.75	400

Get a Quote

Dial Tension Gages

Contact Force Gage SERIES 546

- Contact Force Gages are widely used to determine the measuring force applied by an instrument to a workpiece, as well as contact forces of electrical relays, micro-switches, valves and precision springs.
- Thanks to the miniature anti-friction bearing in the fulcrum, stable measurement is guaranteed.
- 2 types are available: Standard and peak hold.

Standard type
546-112

Peak hold type
546-137

Measurement Example of Contact Force on a Relay

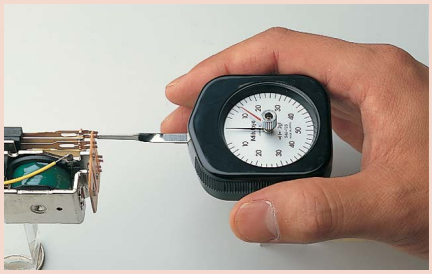

F

SPECIFICATIONS

mN-scale models

Standard

Order No.	Graduation (mN)	Range (mN)	Accuracy (graduation)
546-112	2	6 - 50	±0.5
546-113	5	10 - 100	
546-114	10	30 - 300	

Peak hold

Order No.	Graduation (mN)	Range (mN)	Accuracy (graduation)
—	—	—	—
546-133	5	10 - 100	±0.5
546-134	10	30 - 300	

Note: Please note that these products are only available in their standard forms; they cannot be customized for special sizes or specifications.

N-scale models

Standard

Order No.	Graduation (N)	Range (N)	Accuracy (graduation)
546-115	0.02	0.06 - 0.5	±0.5
546-116	0.05	0.1 - 1	
546-117	0.05	0.15 - 1.5	
546-118	0.1	0.3 - 3	
546-119	0.2	0.6 - 5	

Peak hold

Order No.	Graduation (N)	Range (N)	Accuracy (graduation)
546-135	0.02	0.06 - 0.5	±0.5
546-136	0.05	0.1 - 1	
546-137	0.05	0.15 - 1.5	
546-138	0.1	0.3 - 3	
546-139	0.2	0.6 - 5	

Note: Please note that these products are only available in their standard forms; they cannot be customized for special sizes or specifications.

DIMENSIONS

Unit: mm

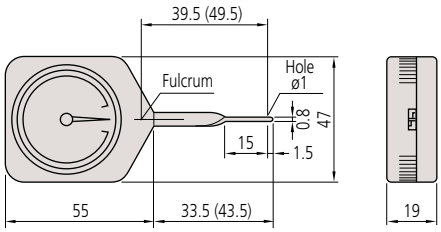

( ): **546-112**, **546-113**, **546-133**

Need Support?

Digital/Dial Snap Gages

Digital/Dial Snap Gage SERIES 201

- Designed for quick Go/±No-go judgment of diameters of cylinders and shafts in machining processes.
- Enables single-handed comparative measurements of a cylinder diameter, etc. while workpiece processing is taking place.
- The dial indicator and protection cover are optional.
- Some digimatic/dial indicators cannot be used with the dial snap gage. Consult Mitutoyo before using dial indicators which are not recommended.
- Measuring faces: Carbide.
- Anvil positioning range: 1 in / 25 mm. Adjustment nut: adjusts the setting anvil to the nominal size required within the measuring range.
- Clamp: clamps the setting anvil at the required position.
- Parallelism: 0.00025 in / 5 µm
- Measuring force (N): 15±3*

201-101

Note: The dial indicator and dial protection cover are optional.

Optional Accessories

Dial protection cover: **29AAA149**

Recommended Dial Indicators/ Digimatic Indicators (Optional)

- Metric models:
  2046AB: Dial indicator (Graduation: 0.01 mm)
  2109AB-10: Dial indicator (Graduation: 0.001 mm)
  543-700B: Digimatic Indicator (Resolution: 0.0005/0.001/0.01 mm)
- Inch models:
  2414AB: Dial indicator (Graduation: 0.001 in)
  2805AB-10: Dial indicator (Graduation: 0.0001 in)
  543-702B: Digimatic Indicator (Resolution: 0.00002/0.00005/0.0001/0.0005 in (0.0005/0.001/0.01 mm))

SPECIFICATIONS

Inch Gage stem diameter 3/8"

Order No.	Range (in)	Throat Depth
201-151	0 - 1	0.5"
201-152	1 - 2	1.0"
201-153	2 - 3	1.5"
201-154	3 - 4	2.0"
201-155	4 - 5	2.5"
201-156	5 - 6	3.0"
201-157	6 - 7	3.5"
201-158	7 - 8	4.0"
201-159	8 - 9	4.5"
201-160	9 - 10	5.0"
201-161	10 - 11	5.5"
201-162	11 - 12	6.0"

Metric Gage stem diameter 8mm

Order No.	Range (mm)	Throat Depth
201-101	0 - 25	12.5mm
201-102	25 - 50	25mm
201-103	50 - 75	37.5mm
201-104	75 - 100	50mm
201-105	100 - 125	62.5mm
201-106	125 - 150	75mm
201-107	150 - 175	87.5mm
201-108	175 - 200	100mm
201-109	200 - 225	112.5mm
201-110	225 - 250	125mm
201-111	250 - 275	137.5mm
201-112	275 - 300	150mm

* Measuring force is that force present before an indicator is installed and is determined at the point where the spindle is retracted 1 mm from the rest position.

DIMENSIONS

Unit: mm

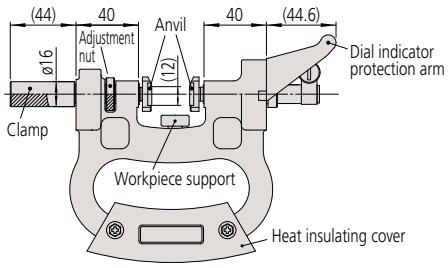

F

Mitutoyo

Stands

Magnetic Stands

- Mitutoyo magnetic stands clamp to iron or steel surfaces with a strong force and are indispensable for temporarily mounting a dial test indicator (or dial indicator) onto a machine tool or fixture for general alignment applications.
- Heavy Duty construction with high-force magnetic bases.
- All include a dovetail groove in the swivel holder for attaching dial test indicators that are equipped with a dovetail.
- With fine adjustment.

64PMT189

SPECIFICATIONS

Order No.	Description	Applicable holding stem sizes	Reach	Magnetic force
64PMT185	Universal magnetic stand	3/8" hole w/8mm sleeve	165mm	Approx. 300 N
64PMT186		3/8" hole w/8mm sleeve	230mm	Approx. 800 N
64PMT187		3/8" hole w/8mm sleeve	310mm	Approx. 800 N
64PMT188		3/8" hole w/8mm sleeve	430mm	Approx. 1000 N
64PMT189	Magnetic stand	3/8" hole w/8mm sleeve	300mm	Approx. 750 N

64PMT188

64PMT185

64PMT186

64PMT187

DIMENSIONS

Unit: mm

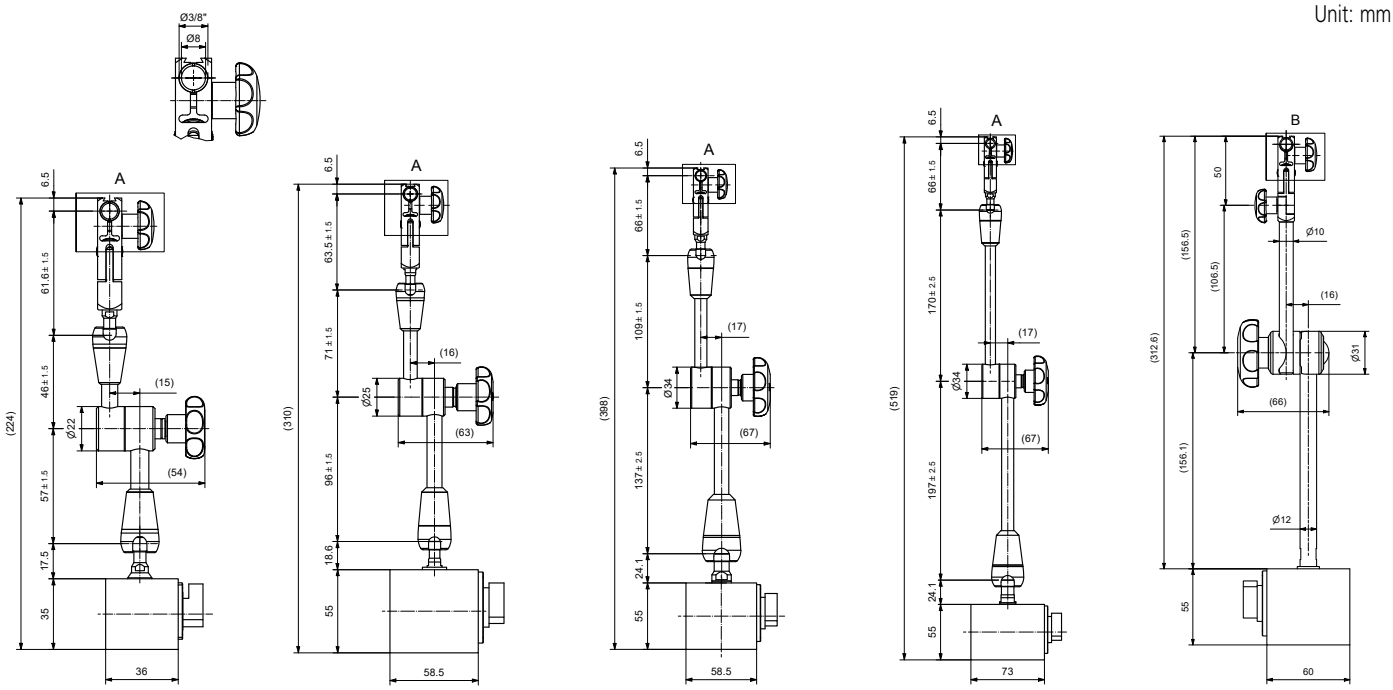

64PMT185 64PMT186 64PMT187 64PMT188 64PMT189

SERIES 7 — Magnetic Stands

- Mitutoyo magnetic stands clamp to iron or steel surfaces with a strong force and are indispensable for temporarily mounting a dial test indicator (or dial indicator) onto a machine tool or fixture for general alignment applications.
- Vertical/horizontal mounting holes and bushes are available for attaching dial test indicators and dial indicators.
- Models **7014-10**, **7014E-10**, **7015-10**, **7031-10**, **7032-10** and **7033-10** have a dovetail groove in the swivel holder for attaching dial test indicators that are equipped with a dovetail.

7010-10

7011-10

7012-10

7014-10
(magnetic clamping is non-switchable)

7033-10

7031-10

7032-10

Need Service?

F

SPECIFICATIONS

Order No.	Description	Applicable holding stem sizes	Magnetic force*1	Remarks
7010-10*2*3	Magnetic stand	ø6 mm, ø8 mm	Approx. 600 N	—
7010S-10*2*3	Magnetic stand	ø4 mm, ø8 mm, ø0.375 in	Approx. 600 N	—
7011-10*2*3	Magnetic stand	ø6 mm, ø8 mm	Approx. 600 N	With fine adjustment
7011S-10*2*3	Magnetic stand	ø4 mm, ø8 mm, ø0.375 in	Approx. 600 N	With fine adjustment
7012-10*4	Magnetic stand	ø6 mm, ø8 mm, ø0.375 in	Approx. 600 N	—
7013-10	Magnetic stand base	—	Approx. 600 N	—
7014-10*4	Mini magnetic stand	ø6 mm, ø8 mm, with dovetail	Approx. 150 N	Without magnet ON/OFF
7014E-10*2*3	Mini magnetic stand	ø4 mm, ø0.375 in	Approx. 150 N	Without magnet ON/OFF
7015-10	Magnetic stand	ø6 mm, ø8 mm, ø0.375 in with dovetail	Approx. 600 N	With magnetic ON/OFF
7031-10	Universal magnetic stand	ø6 mm, ø8 mm, ø0.375 in with dovetail	Approx. 300 N	With magnetic ON/OFF
7032-10	Universal magnetic stand	ø6 mm, ø8 mm, ø0.375 in with dovetail	Approx. 600 N	With magnetic ON/OFF
7033-10	Universal magnetic stand	ø6 mm, ø8 mm, ø0.375 in with dovetail	Approx. 600 N	With magnetic ON/OFF

*1 The magnetic holding force applies to that needed for vertical separation from a thick and flat steel object.
*2 Back plunger type (**1160A**, etc.) cannot be attached.
*3 When attaching a compact dial indicator (outer frame diameter 31, 36 or 40 mm), select a back cover type with a lug.
*4 Use with a dial test indicator or SERIES **1** dial indicator (compact or lightweight type) is recommended.

DIMENSIONS

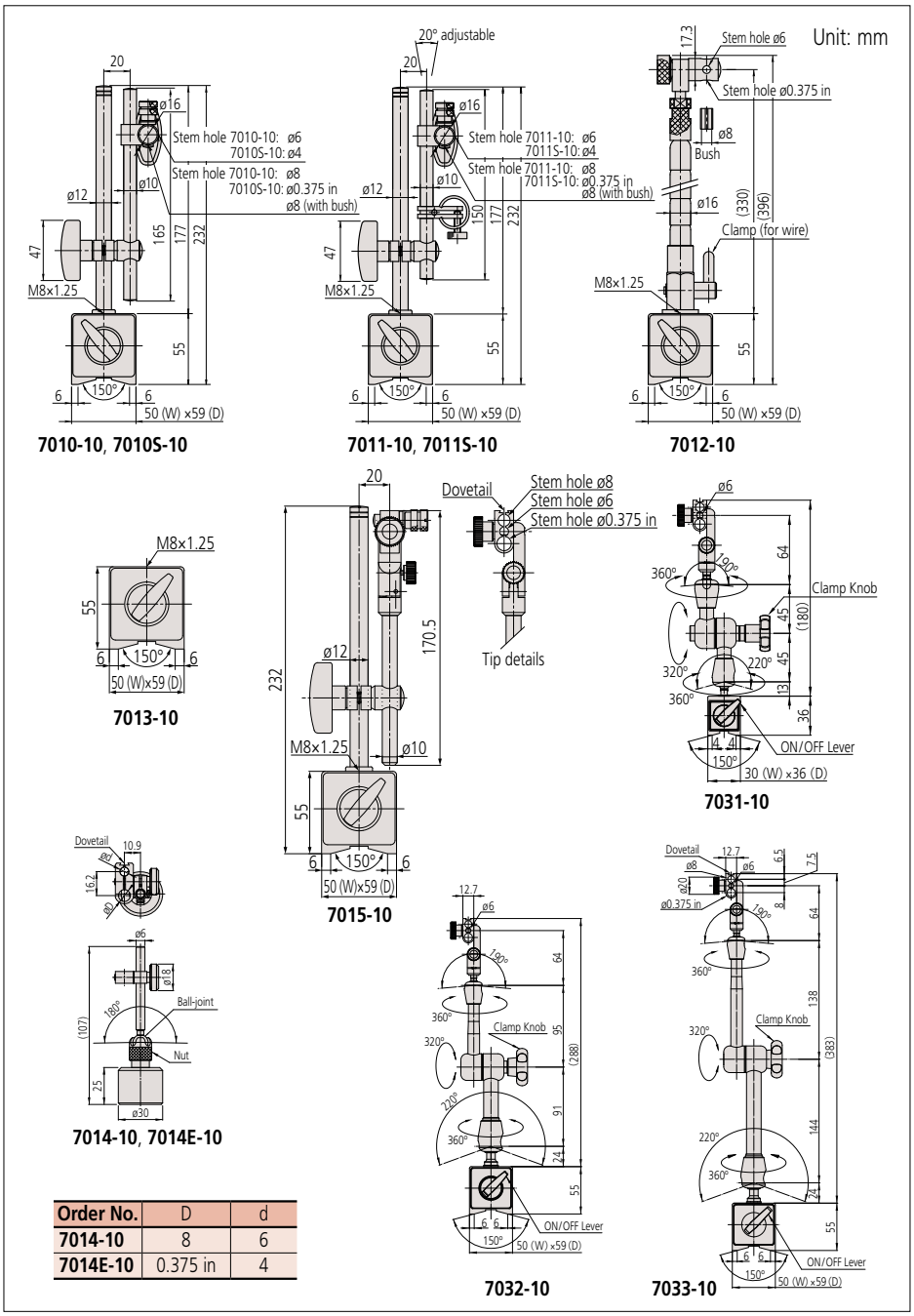

Order No.	D	d
7014-10	8	6
7014E-10	0.375 in	4

SPECIFICATIONS

Set No.	Included in set
64PKA078*	2804A-10, 7010S-10
64PKA079*	2416A, 7010S-10

*Supplied with collar **02AZC291**

Find Training

Optional Accessories

101462: Hardened steel serrated anvil (standard accessory for **7001-10**)

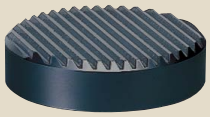

Unit: mm

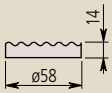

101461: Hardened steel Flat anvil (standard accessory for **7002-10**)

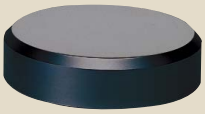

Unit: mm

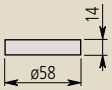

101463: Hardened steel domed anvil* (optional)
* Not available for **7007-10**.

Unit: mm

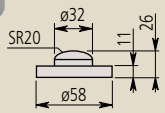

Dial Gage Stands SERIES 7

- Dial Gage Stands are designed for comparison measurements of size using a dial indicator or Digimatic Indicator. An anvil is provided as standard.
- Anvil: ø58 mm serrated anvil, ø58 mm flat anvil, 90 mm square anvil and domed anvil (optional)
- Vertical fine adjustment is available with one-touch control thanks to the parallel spring suspension.

7002-10
(with ø58 mm non-serrated anvil)

SPECIFICATIONS

Inch / Metric

Order No.	Clamping range on column (mm)	Stem hole	Remarks
7001-10	0 to 95	ø8 mm, ø0.375 in	With serrated anvil
7002-10			With flat anvil

Note 1: Perpendicularity of the stem hole to the anvil is better than 0.4 mm/100 mm
Note 2: Take note that when mounting high-accuracy Linear Gages (with resolution of 0.1 µm or better) to these stands, accuracy may be affected depending on the perpendicularity of the mounting hole to the top surface of the anvil (cosine effect).
Note 3: Compact dial indicators (bezel ø31, ø36) are not suitable for use with these stands.

DIMENSIONS

Unit: mm

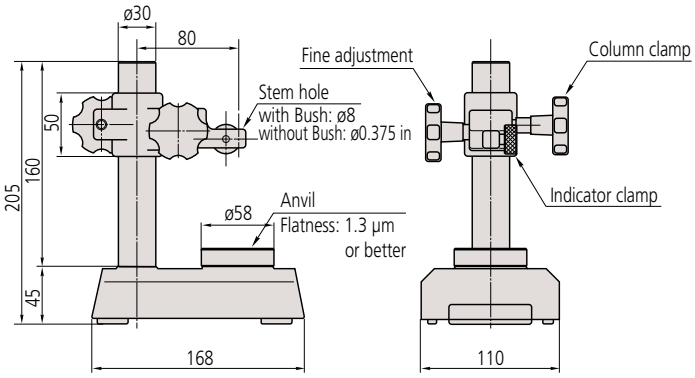

7001-10, 7002-10
- Clamping range on column: 0 to 95 mm
- Flatness of reference surface: 1.3 µm

F

Stands

Dial Gage Stands
SERIES 7

- Dial Gage Stands are designed for comparison measurements of size using a dial indicator or Digimatic Indicator. An anvil is provided as standard.
- Anvil: 90 mm semi-serratd flat anvil.
- Vertical fine adjustment is available with one-touch control thanks to the parallel spring suspension.

7007-10

SPECIFICATIONS

Inch / Metric

Order No.	Clamping range on column (mm)	Stem hole	Remarks
7007-10	0 to 90	ø8 mm, ø0.375 in	With square anvil

Note 1: Perpendicularity of the stem hole to the anvil is better than 0.4 mm/100 mm
Note 2: Take note that when mounting high-accuracy Linear Gages (with resolution of 0.1 µm or better) to these stands, accuracy may be affected depending on the perpendicularity of the mounting hole to the top surface of the anvil (cosine effect).
Note 3: Compact dial indicators (bezel ø31, ø36) are not suitable for use with these stands.

DIMENSIONS

Unit: mm

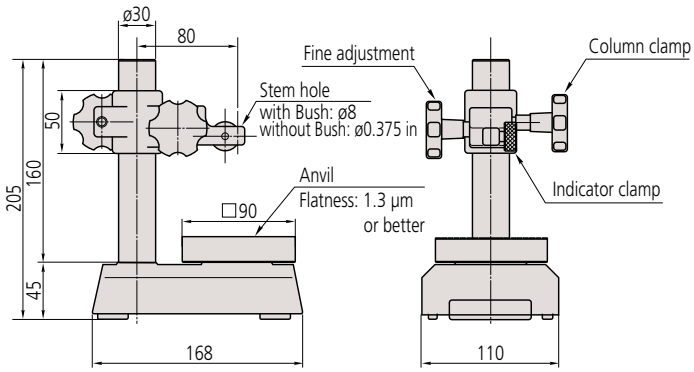

7007-10
- Clamping range on column: 0 to 90 mm
- Flatness of reference surface: 1.3 µm

SERIES 913

- Simple standard version.
- Serrated flat anvil.
- For ø8 mm stems only.
- ø22 mm Column diameter.
- Optional holder for cylindrical parts.

913-102

SPECIFICATIONS

Metric

Order No.	Effective table dimensions (mm)	Stem hole	Clamping range on column (mm)
913-102	60 X 70	ø8 mm	0 to 100

Optional Accessories

913-201 Horizontal holder

913-201

Optional Accessories

101462: Hardened steel serrated anvil (standard accessory)

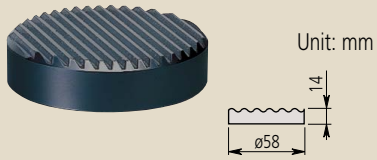

101461: Hardened steel flat anvil (optional)

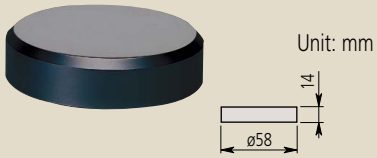

101463: Hardened steel domed anvil (optional)

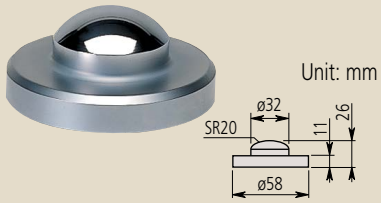

SERIES 519 — Transfer Stands

- Transfer Stands are designed for comparison measurements of size using a dial indicator or Digimatic Indicator.

519-109-10
(with a serrated anvil)

SPECIFICATIONS

Order No.	Anvil	Clamping range on column (mm)	Micromotion adjustment range (mm)	Stem hole
519-109-10	With a serrated anvil (ø58 mm)	0 to 320	1	ø0.375 in, ø8mm with Bushing

Note 1: Perpendicularity of the stem hole to the anvil is better than 0.4 mm/100 mm.
Note 2: Take note that when mounting high-accuracy Linear Gages (with resolution of 0.1 µm or better) to these stands, accuracy may be affected depending on the perpendicularity of the mounting hole to the top surface of the anvil (cosine effect).
Note 3: Compact dial indicators (bezel ø31, ø36) are not suitable for use with these stands.

DIMENSIONS

Unit: mm

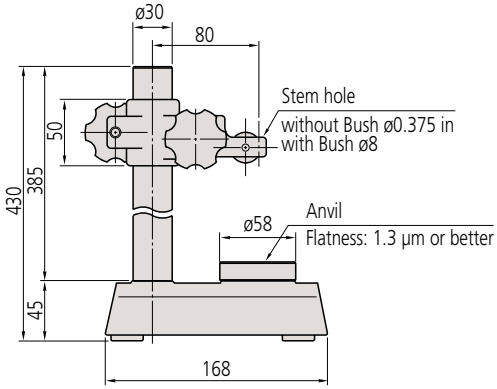

- Clamping range on column: 0 to 320 mm
- Flatness of the bottom surface: 0.003 mm

Find a Distributor

F

Stands

SERIES 215 — Cast Iron Base Comparator Stands

- Comparator Stands are designed for comparison measurements of size using a dial indicator or Digimatic Indicator.
- The semi-serrated anvil prevents very flat workpieces from wringing to it.

215-405-10

Example of Attaching the Digimatic Indicator

Digimatic Indicator **ID-H**.

Optional Accessories

ø15 mm bushing (for **215-156-10**, **215-505-10**): **21JAA331**

SPECIFICATIONS

Order No.	Anvil	Clamping range on column (mm)	Micromotion mechanism (Adjustment range)	Stem hole
215-405-10	Square semi-serrated anvil (110×110 mm)	0 to 235	Vertical fine adjustment (1 mm)	ø0.375 in, ø8 mm with Bushing
215-505-10	Square semi-serrated anvil (150×150 mm)	0 to 275	Micromotion screw	ø20 mm, ø0.375 in with Bushing, ø8 mm with Bushing

Note 1: Perpendicularity of the stem hole to the anvil is better than 0.4 mm/100 mm.
Note 2: Take note that when mounting high-accuracy Linear Gages (with resolution of 0.1 µm or better) to these stands, accuracy may be affected depending on the perpendicularity of the mounting hole to the top surface of the anvil (cosine effect).
Note 3: Compact dial indicators (bezel ø31, ø36) are not suitable for use with these stands.

DIMENSIONS

Unit: mm

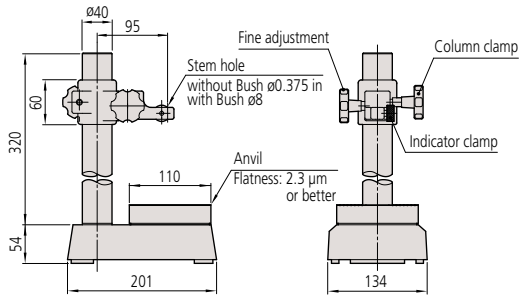

215-405-10
- Clamping range on column: 0 to 235 mm

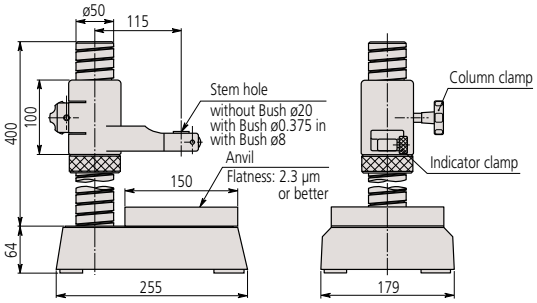

215-505-10
- Clamping range on column: 0 to 275 mm

Got Questions?

SERIES 215 — Granite Base Comparator Stands

- The plates are made of natural stone and deteriorate very little over time.
- The rigid granite base is free from burrs and pileups due to its fine-grain composition and less viscousness compared with casting iron. The flatness is always accurate.

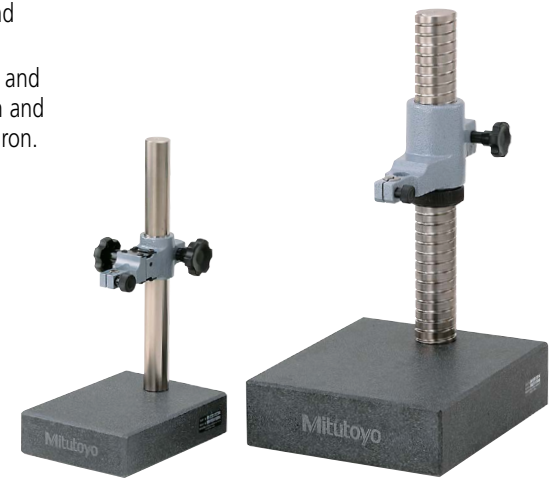

215-151-10 215-156-10

SPECIFICATIONS

Order No.	Granite base size (W×D×H) (mm)	Clamping range on column (mm)	Stem hole	Remarks
215-150-10	120×180×50	0 to 110	ø8 mm, ø0.375 in	With fine adjustment of 1 mm range
215-151-10	150×200×50	0 to 250		
215-153-10	200×250×80	0 to 260		
215-156-10	300×250×80	0 to 275	ø8 mm, ø0.375 in, ø20 mm	With fine adjustment over entire travel

Note 1: Perpendicularity of the stem hole to the anvil is better than 0.2 mm/100 mm.
Note 2: Take note that when mounting high-accuracy Linear Gages (with resolution of 0.1 µm or better) to these stands, accuracy may be affected depending on the perpendicularity of the mounting hole to the top surface of the anvil (cosine effect).
Note 3: Compact dial indicators (bezel ø31, ø36) are not suitable for use with these stands.

DIMENSIONS

Unit: mm

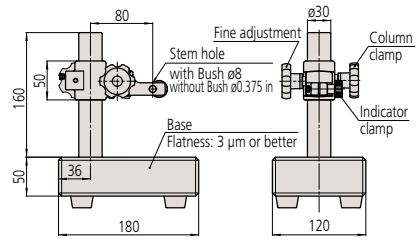

215-150-10
- Clamping range on column: 0 to 110 mm

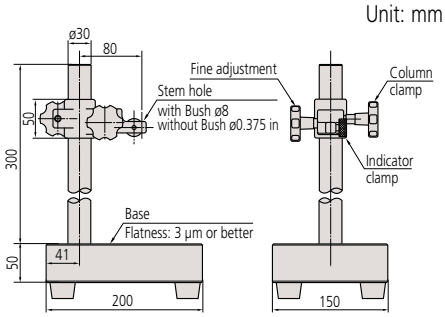

215-151-10
- Clamping range on column: 0 to 250 mm

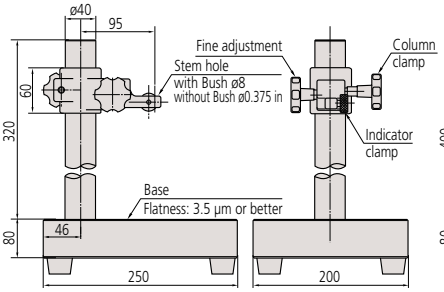

215-153-10
- Clamping range on column: 0 to 260 mm

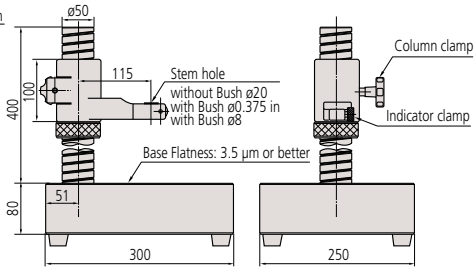

215-156-10
- Clamping range on column: 0 to 275 mm

F

Mitutoyo

Stands

Precision Granite Stands (with black granite bases)
SERIES 517

Mitutoyo Granite Comparator Stands are basic building blocks for the assembly of special purpose, precision measuring equipment. By mounting precision measuring instruments such as Digimatic indicators, Mu-Checker Cartridge Heads and Linear Gages on the stands, it is possible to satisfy all manners of measuring assignment. The rigid granite base is free from burrs, pileups and rust, thereby preventing deterioration over time.

517-891

517-892

Optional Accessories

012580: Holder for Lug-Back indicator

F

SPECIFICATIONS

Order No.	Base	Column Diameter	Column Height	Throat Clearance	Table Flatness	Table Thickness	Weight
517-890	6 x 8″	1.181″	6″	4.375″	.0001″	2″	18 lbs
517-891			8″				19 lbs
517-892			12″				20 lbs
517-893			18″				21 lbs
517-895	8 x 12″		6″	5.8″			29 lbs
517-896			8″				30 lbs
517-897			12″				31 lbs
517-898			18″				32 lbs
517-899			24″				35 lbs

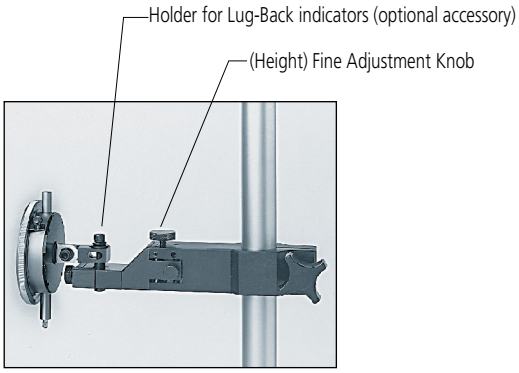

Talk to Sales

Mounting Fixtures

- Mitutoyo offers various types of brackets to meets a range of applications
- Made from durable, nickel-plated cast iron

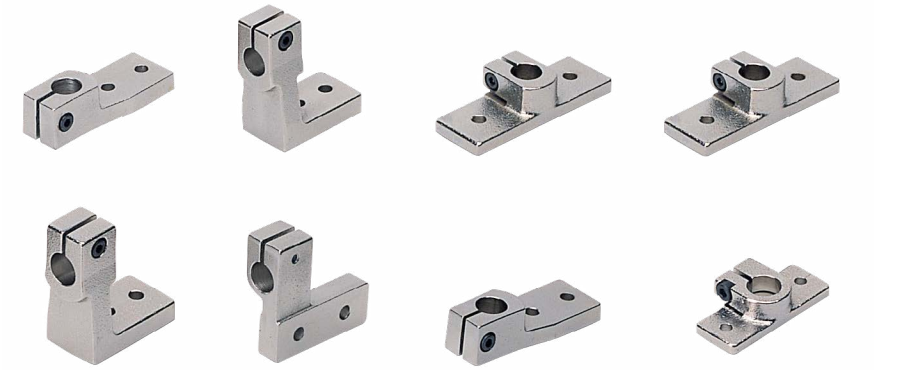

DIMENSIONS

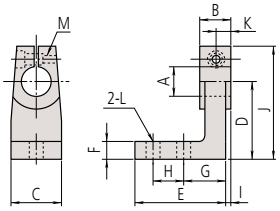

(Unit: mm)

Order No.	A	B	C	D	E	F	G	H	I	J	K	L	M
303560	ø9.5	9	15	20	23	5	11	8	1.5	3.25	4.5	ø3.4	M3x 0.5
303569		14.5	20	30	35	7	16	12	3.25	4.25	7.25	ø4.5	
303579	ø10												

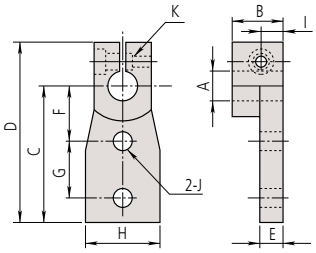

(Unit: mm)

Order No.	A	B	C	D	E	F	G	H	I	J	K
303564	ø9.5	9	30	42.5	4	15	10	15	4.5	ø3.4	M3x 0.5
303573		14.5	40	52.5	6	18	15	20	7.25	ø4.5	
303583	ø10										

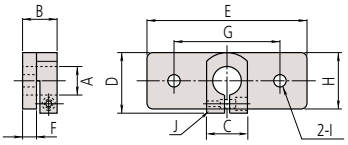

(Unit: mm)

Order No.	A	B	C	D	E	F	G	H	I	J
303562	ø9.5	9	15	20	40	3	30	15	ø3.4	M3x 0.5
303571		14.5		22.5	60	5	40	20	ø4.5	
303581	ø10									

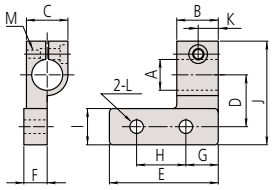

(Unit: mm)

Order No.	A	B	C	D	E	F	G	H	I	J	K	L	M
303566	ø9.5	9	15	15	25	8.5	7.5	10	10	32.5	4.5	ø3.4	M3x 0.5
303575		14.5		20	40		10	20	15	40	7.25	ø4.5	
303585	ø10												

F

Mitutoyo

Featured Products

Linear Gages (Environment-Resistant)

LG100 Series

Refer to pages G-5 to G-6 for details.

Linear Gages (Environment-Resistant and Slim Type)

LG200 Series

Refer to page G-7 for details.

Industrial Interface-mounted Compact Counter

EJ-102N/NE Counter, Interface Unit

Refer to page G-13 for details.

High Accuracy Non-contact Measuring System/ Laser Scanning Micrometer

Refer to pages G-30 for details.

In-line, Non-contact Measuring System / Laser Scanning Micrometer

Refer to pages G-31 for details.

Measuring Instruments Shipped with Inspection Certificate

Mitutoyo guarantees product quality as a leading precision measuring instrument manufacturer and ships measuring instruments with an inspection certificate that includes inspection data so that customers can use them with confidence.

ABSOLUTE™

ABSOLUTE Linear Encoder

Mitutoyo developed the unique absolute method to retain position information after the power is turned off. The origin is set once - thereafter the live position is displayed when the power is turned on.

MiCAT

Mitutoyo Intelligent Computer Aided Technology

the standard in world metrology software

SENSOR

Measurement Program

Free downloadable software available. **LSMPak** and **QuickTool**.

MeasurLink® ENABLED

Data Management Software by Mitutoyo

Measurement Data Network System

MeasurLink® is a measurement data management system based on databases (SQL Server). You can build a network to manage the measurement results and measuring machines by simply combining the functions necessary for your purpose.

MeasurLink® is a registered trademark of Mitutoyo Corporation in Japan and Mitutoyo America Corporation in the United States.

IP67 G IP66

IP Codes

These are codes that indicate the degree of protection provided (by an enclosure) for the electrical function of a product against the ingress of foreign bodies, dust and water as defined in IEC standards (IEC 60529: 2001) and JIS C 0920: 2003.
(Refer to page IX)

INDEX

Linear Gages

Selection Guide	G-3,4
Gage Heads/Display Units LG100	G-5,6
Gage Heads/Display Units LG200	G-7
Low-cost Linear Gage LGS-1012P	G-8
High-accuracy/resolution Type LGH	G-9,10
Linear Gage Counter EC	G-11
Linear Gage Counter EH	G-12
Linear Gage Counter EJ-102N/NE	G-13,14
Linear Gage Counter LG QuickSetupTool	G-15
Linear Gage Counter SENSORPAK	G-16
Measurement Examples	G-17
Quick Guide to Precision Measuring Instruments	G-18,19

Litematic

VL-50-B/50S-B	G-20

Mu-Checker

Analog or digital amplifier/display	G-21
Lever/Cartridge Probe Heads	G-22
EV-16A Counter	G-23
D-EV	G-24
Quick Guide to Precision Measuring Instruments	G-25

Non-contact Sensors

Surface Measure-S Series	G-26,27,28,29

Laser Scan Micrometers-Inline/PLC

LSM-02-A	G-31
LSM-30-A	G-31
LSM-CU-A	G-31
Optional Accessories	G-32
LSM I/F Module	G-33

Laser Scan Micrometers-General Use

Laser Scan Micrometer Selection Guide	G-34
Laser Scan Micrometer LSM-503S	G-35
Laser Scan Micrometer LSM-506S	G-35
Laser Scan Micrometer LSM-512S	G-36
Laser Scan Micrometer LSM-6902H	G-37
LSM-6200 Display Unit	G-38
LSM-5200 Display Unit	G-38
Laser Scan Micrometer Optional Accessories	G-39,40,41
Interface for LSM6200, LSM 6900	G-41
Quick Guide to Precision Measuring Instruments-Laser Scan Micrometers	G-42

Gage Heads/Display Units

[Conversion plug]

[Gage Heads]

Environment-Resistant

LG100

IP67 G

Measuring range: 10 mm/25 mm/50 mm
Resolution: 1 µm/0.5 µm/0.1 µm

Refer to page G-5

Environment-Resistant and Slim Type

LG200*

IP67 G

Measuring range: 10 mm
Resolution: 1 µm/0.5 µm/0.1 µm

Refer to page G-7

* Function of reference point detection on counter is disabled.

Conversion Plug
21HZA196

Conversion Cable
21HZA261

Conversion Plug
21HZA195

Conversion Cable
21HZA260

Digimatic output Type

LGS

IP66

Measuring range: 12.7 mm
Resolution: 10 µm

Refer to page G-8

High-accuracy Type

LGH

Measuring range: 10 mm
Resolution: 0.01 µm/0.005 µm

Refer to page G-9

G

Gage Heads/Display Units

[Display Units]

DIN rail-mounted Type

EJ-102N/NE

2-axis input, subtraction calculations
8 units can be connected

Refer to page G-13

Panel mount

EH-102Z

2-axis input, subtraction calculations
Multi-function

Refer to page G-12

EH-101P (1 axis)
EH-102P (2 axes)

Multi-function

Refer to page G-12

EH-102D

2-axis input, subtraction calculations
Multi-function

Refer to page G-12

Compact display Unit

EC-101D

1-axis input

Refer to page G-11

[Interface Unit/Software]

Interface Unit

CC-Link
21HZA186

Refer to page G-13

PROFINET
21HZA187

Refer to page G-13

EtherNet/IP
21HZA188

Refer to page G-13

EtherCAT
21HZA264

Refer to page G-13

USB
21HZA149

Refer to page G-13

Setup tool for EJ counters

LG QuickSetupTool
(can be downloaded for free from the Mitutoyo website)

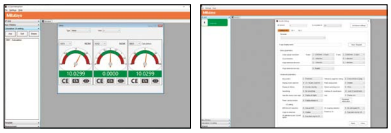

Refer to page G-15

Measurement data acquisition software

SENSORPAK

Refer to page G-16

Find a Distributor

G

Mitutoyo

Linear Gages

IP67 G

LG100 Standard Type Probe
SERIES 542 — Environment-Resistant type

- High-accuracy gage head suitable for in-line and general use.
- Guaranteed Accuracy and Repeatability.
- Sliding durability of 50 million+ cycles*1.
- Can be connected to various counters such as:
  - EJ series - built-in display, modular, compact, with PLC interfaces, as well as USB
  - EH series - high-visibility display, serial and I/O communication (adapter required)
  - or direct to machines via TTL output from the Linear Gage
- **IP67G** protection rating with superior oil-resistance compared to standard gages.
- All models have the origin point signal output function to restore the origin point position after recovery from problems such as overspeed.
- When using any EJ+interface, a free setup and viewing software is available: LG Quicksetuptool (refer to page G-15)

*1 10 mm range models (Actual value from in-house tests)

Enables real-time measurement and data management

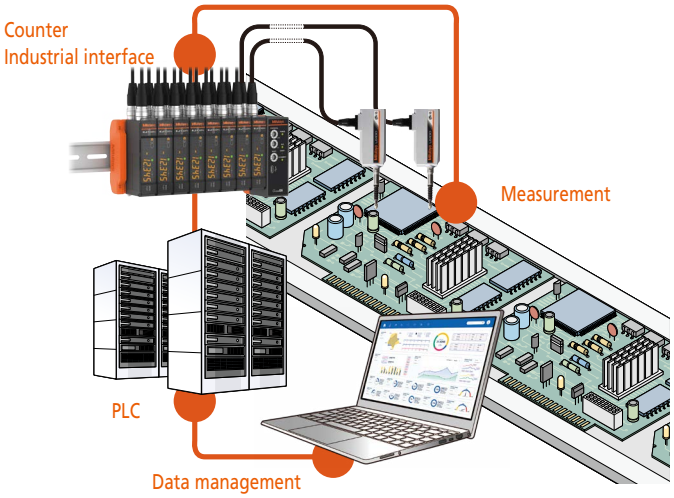

System Configuration

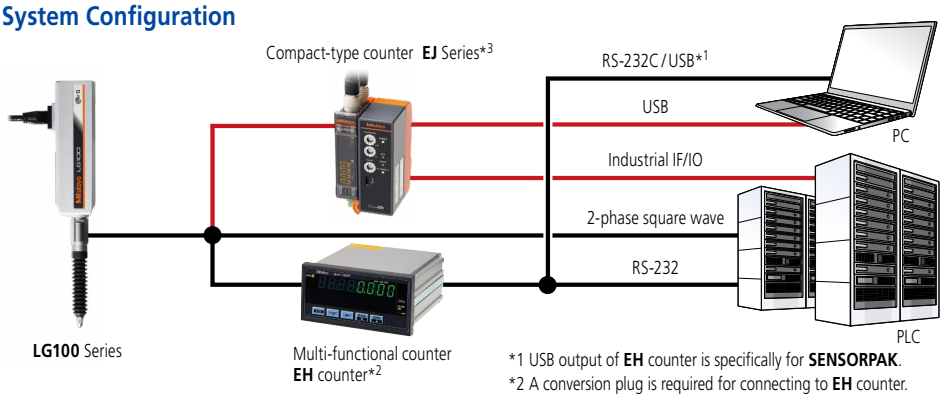

*1 USB output of **EH** counter is specifically for **SENSORPAK**.
*2 A conversion plug is required for connecting to **EH** counter.
*3 Conventional gages can be connected using conversion connectors. (Please contact us for details of connectable gages.)

Connector

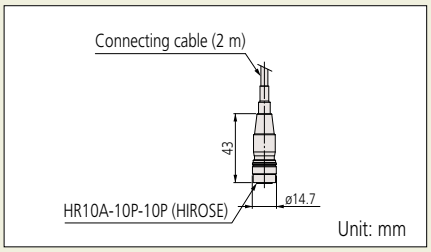

Optional Accessories

- Air lifter
  For 10 mm range models: **02ADE230**
  For 25 mm range models: **02ADE250**
  For 50 mm range models: **02ADE270**
  Note 1: Required air pressure: 0.2 to 0.4 MPa
  (With a 0.1 µm resolution type: 0.2 MPa)
  Note 2: Spindle extends when air is supplied.

- Rubber boot (spare)
  For 10 mm range models: **21HAA331**
  For 25 mm range models: **21HZA176**
  For 50 mm range models: **21HZA184**
  Note 3: Dimensions are shown in the external dimensions drawing of the product.
- Thrust stem set:
  For 10 mm range models: **02ADB680**
  (Thrust stem: **02ADB681**, Clamp nut: **02ADB682**)
  For 25/50 mm range models: **02ADN370**
  (Thrust stem: **02ADN371**, Clamp nut: **02ADB692**)
  This is a combination of thrust stem and a clamp nut.
- Spanner wrench:
  For 10 mm range models: **02ADB683**
  For 25/50 mm range models: **02ADB693**
  If required spanner wrench is required for tightening.
  If using multiple gages, a thrust stem set is required for each gage and one spanner wrench.
- Extension cable
  5 m: **21HZA197**
  10 m: **21HZA198**
  20 m: **21HZA199**
  Note 4: Connectable up to 3 pieces, 20 m at maximum.
- Conversion Plugs / Cables
  Plug connection to EH-101P/102P: **21HZA195**
  Plug connection to EH-102Z: **21HZA196**
  Cable connection to EH-101P/102P: **21HZA260**
  Cable connection to EH-102Z: **21HZA261**

Note: Connectable to EH-102Z but the function of reference point detection is disabled.

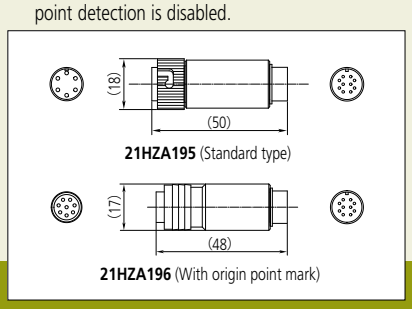

G

SPECIFICATIONS

Order No.		542-190	542-191	542-192	542-193	542-194	542-195	542-196	542-197
Measuring range		10 mm / .4"			25 mm / 1"			50 mm / 2"	
Resolution		1 µm	0.5 µm	0.1 µm	1 µm	0.5 µm	0.1 µm	1 µm	0.5 µm
		.00005"	.000020"	5 uinch	.00005"	.000020"	5 uinch	.00005"	.000020"
Measuring accuracy (20 °C) L=arbitrary measuring length (mm)		1.5 + L/50 µm		0.8 + L/50 µm	1.5 + L/50 µm		0.8 + L/50 µm	1.5 + L/50 µm	
Small range accuracy (20 °C)		0.5 µm (Arbitrary 20 µm range)							
Repeatability: 2σ (20 °C)		0.3 µm							
Reference mark repeatability: σ (20 °C)		σ≤0.5 µm (at a constant reference point passing speed less than 300 mm/s in the same direction)							
Measuring force	Contact point downwards	1.4 N or less			4.6 N or less			5.7 N or less	
	Contact point horizontal	1.3 N or less			4.3 N or less			5.3 N or less	
	Contact point upwards	1.2 N or less			4.0 N or less			4.9 N or less	
Position detection method		Optical transmission-type Linear encoder							
Maximum response speed		1,500 mm/s		400 mm/s	1,500 mm/s		400 mm/s	1,500 mm/s	
Output signal		90° phase difference, differential square wave (RS-422A equivalent)							
Minimum edge intervals		500 ns (2 MHz)	250 ns (4 MHz)		500 ns (2 MHz)	250 ns (4 MHz)		500 ns (2 MHz)	250 ns (4 MHz)
Output signal pitch		4 µm	2 µm	0.4 µm	4 µm	2 µm	0.4 µm	4 µm	2 µm
Reference mark position (Phase-Z)		Approx. 3 mm from contact point tip (lowest rest point)			Approx. 5 mm from contact point tip (lowest rest point)				
Mass		Approx. 260 g			Approx. 300 g			Approx. 400 g	
Contact point		ø3 mm carbide tipped (fixing screw: (M2.5x0.45), standard contact point: **901312**							
Stem		ø8 mm			ø15 mm				
Bearing		Linear ball type							
Output cable length		2 m (directly from casing)							
Connector		Plug: HR10A-10P-10P (HIROSE), Compatible receptacle: HR10A-10R-10S (HIROSE), Compatible connector: HR10A-10J-10S (HIROSE)							
Operating temperature (humidity) ranges		0 to 50 °C (RH 20 to 80%, non-condensing)							
Storage temperature (humidity) ranges		-10 to 60 °C (RH 20 to 80%, non-condensing)							
Standard accessories		Wrench for contact point: **538610**			Wrench for contact point: **210187**				

G

DIMENSIONS

Unit: mm

542-190 / 542-191 / 542-192

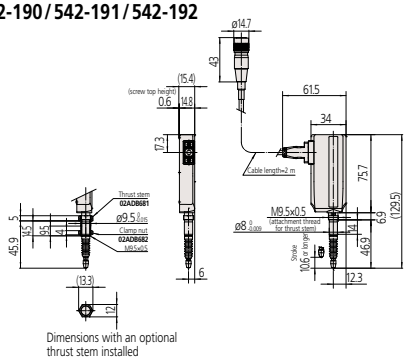

Dimensions with an optional thrust stem installed

542-193 / 542-194 / 542-195

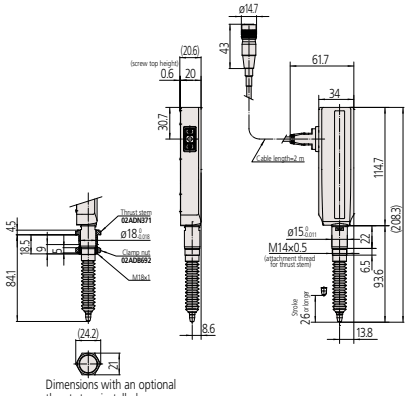

Dimensions with an optional thrust stem installed

542-196 / 542-197

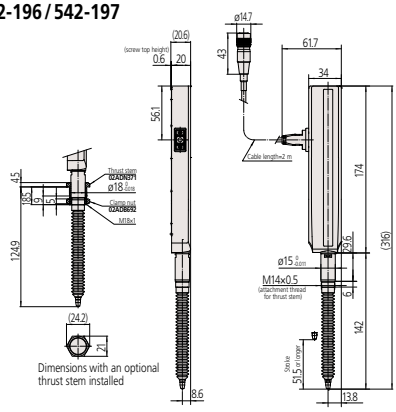

Dimensions with an optional thrust stem installed

Mitutoyo

Got Questions?

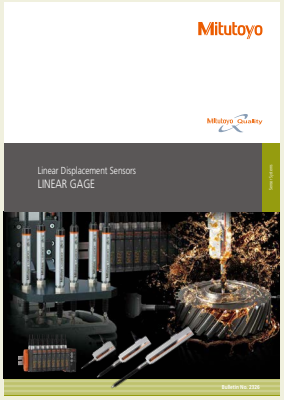

Refer to the Linear Gage Brochure (**2326**) for more details.

Mitutoyo

Linear Gages

IP67 G

LG200 Pencil Probe Style
SERIES 542 — Environment-Resistant and Slim Type

- High-accuracy gage head suitable for in-line and general use.
- Guaranteed Accuracy and Repeatability.
- Sliding durability of 100 million+ cycles*1.
- Can be connected to various counters such as:
  - EJ series - built-in display, modular, compact, with PLC interfaces, as well as USB
  - EH series - high-visibility display, serial and I/O communication (adapter required)
  - Direct to machines via TTL output from the Linear Gage
- **IP67G** protection rating with superior oil-resistance compared to standard gages.
- When using any EJ+interface, a free setup and viewing software is available: LG Quicksetuptool (refer to page G-15)

*1 10 mm range models (Actual value from in-house tests)

542-187

SPECIFICATIONS

Order No.		542-186	542-187	542-188
Measuring range		10 mm / .4"		
Resolution		1 µm / .000050"	0.5 µm / .000020"	0.1 µm / 5 µinch
Measuring accuracy (20 °C)		(1.5 + L/50) µm L=arbitrary measuring length (mm)		(0.8 + L/50) µm L=arbitrary measuring length (mm)
Small range accuracy		0.5 µm (Arbitrary 20 µm range)		
Repeatability: 2 σ (20 °C)		0.3 µm		
Measuring force	Contact point downwards	0.8 N or less		
	Contact point horizontal	0.75 N or less		
	Contact point upwards	0.7 N or less		
Position detection method		Optical transmission-type Linear encoder		
Maximum response speed		1500 mm/s		400 mm/s
Output signal		90° phase difference, differential square wave (RS-422A equivalent)		
Minimum edge intervals		500 ns (2 MHz)	250 ns (4 MHz)	
Output signal pitch		4 µm	2 µm	0.4 µm
Mass		Approx. 210 g		
Contact point		ø3 mm carbide tipped (fixing screw: (M2.5x0.45), standard contact point: **901312**		
Stem		ø8 mm		
Bearing		Linear ball type		
Output cable length		Approx. 2.5 m (directly from casing)		
Connector		Plug: HR10A-10P-10P (HIROSE), Compatible receptacle: HR10A-10R-10S (HIROSE), Compatible connector: HR10A-10J-10S (HIROSE)		
Operating temperature (humidity) ranges		0 to 50 °C (RH 20 to 80%, non-condensing)		
Storage temperature (humidity) ranges		–10 to 60 °C (RH 20 to 80%, non-condensing)		
Standard Accessories		Wrench for contact point: **538610**		

DIMENSIONS

Unit: mm

542-186 / 542-187 / 542-188

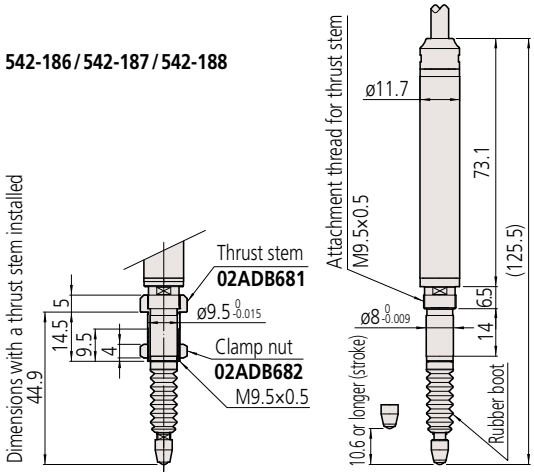

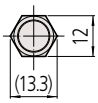

Dimensions with an optional thrust stem installed

Connector

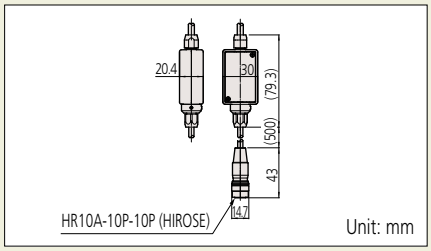

Optional Accessories

- Air lifter: **02ADE230**
  Note 1: Required air pressure: 0.2 to 0.4 MPa
  (With a 0.1 µm resolution type: 0.2 MPa)
  Note 2: Spindle extends when air is supplied.

- Rubber boot: **21HAA331** (spare)
- Thrust stem set: **02ADB680**
  (Thrust stem: **02ADB681**, Clamp nut: **02ADB682**)
  This is a combination of thrust stem and a clamp nut.
- Spanner wrench: **02ADB683**
  If required spanner wrench is required for tightening.
  If using multiple gages, one spanner wrench and a thrust stem set is required for each gage.

Thrust stem set / Spanner Wrench

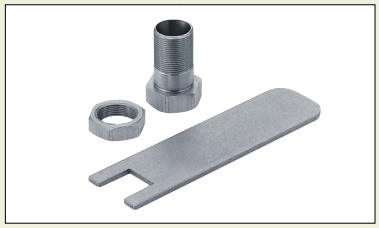

- Extension cable
  5 m: **21HZA197**
  10 m: **21HZA198**
  20 m: **21HZA199**
  Note 1: Connectable up to 3 pieces, 20 m at maximum.
- Conversion Plugs / Cables
  Plug connection to EH-101P/102P: **21HZA195**
  Plug connection to EH-102Z: **21HZA196**
  Cable connection to EH-101P/102P: **21HZA260**
  Cable connection to EH-102Z: **21HZA261**

Note: Connectable to EH-102Z but the function of reference point detection is disabled.

Custom order example
- Measuring force change
- Cable length change (less than 2 m)
- Connector change

G

Linear Gages

LGS-1012P
SERIES 575 — Digimatic output Type

- ABSOLUTE electrostatic capacitance type encoder makes it possible to maintain the reference point even when the power is switched off.
- Excellent protection against dust and splashing water (IP66) on the factory floor.

575-303

Connector

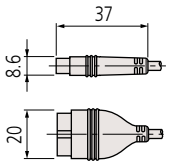

Unit: mm

Optional Accessories

- EC Counter: **542-007A**
- EH Counter: **542-072A**
- Air lifter (metric): **903594**
- Air lifter (inch): **903598**
- SPC cable extension adapter: **02ADF640**
- Extension cable for Digimatic gages (0.5 m): **02ADD950**
- Extension cable for Digimatic gages (1 m): **936937**
- Extension cable for Digimatic gages (2 m): **965014**
- Rubber boot: **238774** (spare)

Note: When connecting an extension cable, an SPC cable extension adapter is required.

542-007A

542-072A

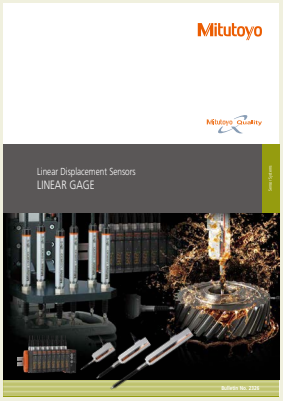

Refer to the Linear Gage Brochure (**2326**) for more details.

SPECIFICATIONS

Inch

Order No.		575-313
Measuring range		0.5 in
Resolution		0.0005 in
Measuring accuracy (20 °C)		0.0008 in
Measuring force	Contact point downwards	2 N or less
	Contact point horizontal	1.8 N or less
	Contact point upwards	1.6 N or less
Position detection method		ABSOLUTE electrostatic capacitance type linear encoder
Response speed		Unlimited (not applicable to scanning measurement)
Output		Digimatic code
Mass		Approx. 190 g
Contact point		ø3 mm carbide tipped (fixing screw: 4-48 UNF), standard contact point: **21BZB005**
Stem		ø9.52=3/8 in DIA
Bearing		Plain type
Output cable length		2 m (directly extended from the main unit)
Operating temperature (humidity) ranges		0 to 40 °C (RH 20 to 80%, non-condensing)
Storage temperature (humidity) ranges		–10 to 60 °C (RH 20 to 80%, non-condensing)

Metric

Order No.		575-303
Measuring range		12.7 mm
Resolution		10 µm
Measuring accuracy (20 °C)		15 µm
Measuring force	Contact point downwards	2 N or less
	Contact point horizontal	1.8 N or less
	Contact point upwards	1.6 N or less
Position detection method		ABSOLUTE electrostatic capacitance type linear encoder
Response speed		Unlimited (not applicable to scanning measurement)
Output		Digimatic code
Mass		Approx. 190 g
Contact point		ø3 mm carbide tipped (fixing screw: (M2.5 x 0.45), standard contact point: **901312**
Stem		ø8 mm
Bearing		Plain type
Output cable length		2 m (directly extended from the main unit)
Operating temperature (humidity) ranges		0 to 40 °C (RH 20 to 80%, non-condensing)
Storage temperature (humidity) ranges		–10 to 60 °C (RH 20 to 80%, non-condensing)

DIMENSIONS

575-313 Unit: ina

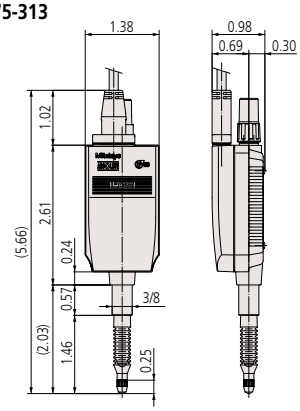

575-303 Unit: mm

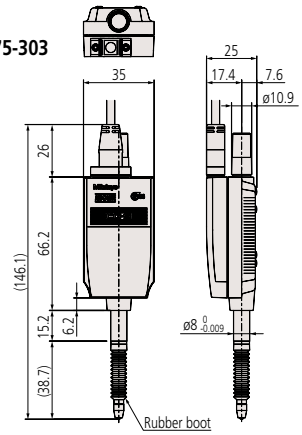

G

Linear Gages

LGH (0.01/0.005 µm resolution)
SERIES 542 — High-accuracy/resolution Type

- This series has achieved very high accuracy combined with a resolution of 0.01/0.005 µm (according to model), practically equivalent to that of a laser interferometer, and a wide measuring range of 10 mm.
- A compact body design makes a significant contribution to a downsizing of this gage itself, which is best suited for calibration/evaluation of master gages as well as measurement of high-precision parts and as a length measuring sensor incorporated into high-precision positioning/control units.
- A low measuring force model is available for those applications where measurement of easily deformed or damaged workpieces is required.
- Every LGH Series gage is bundled with a dedicated counter.

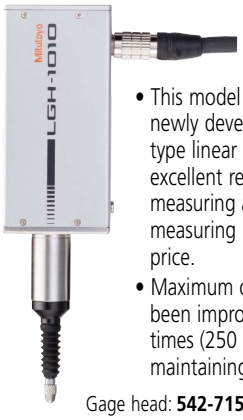

- This model is equipped with a newly developed optical reflection-type linear encoder, achieving an excellent resolution of 0.01 µm, a measuring accuracy of 0.2 µm and a measuring range of 10 mm at a low price.
- Maximum operating speed has been improved by a factor of 2.8 times (250 mm/s → 700 mm/s) while maintaining very high accuracy.

Gage head: **542-715A**

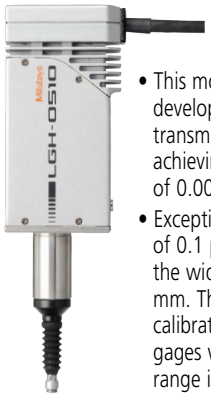

- This model is equipped with a newly developed ultra-high precision transmission type linear encoder, achieving the outstanding resolution of 0.005 µm (5 nm).
- Exceptional measuring accuracy of 0.1 µm has been attained over the wide measuring range of 10 mm. This series is most suited for calibration/evaluation of master gages where its wide measuring range is a great advantage.

Gage head: **542-720A**

Dedicated counter

TYPICAL APPLICATIONS

Master gage calibration/evaluation

Inspection of high-precision parts

Needle contact-point mounting example

DIMENSIONS

Unit: mm

542-716A

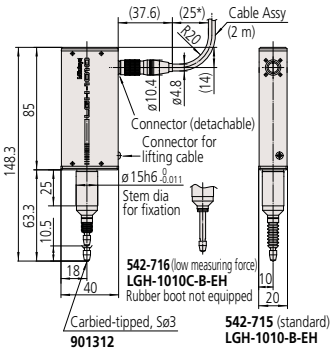

542-721A

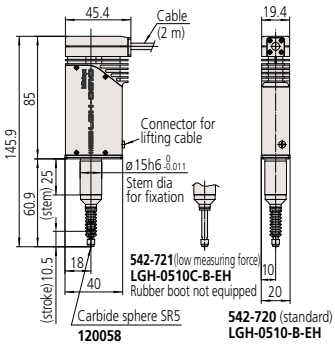

Dedicated counter (set)

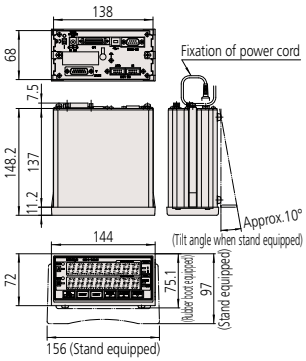

* Minimum bending radius or minimum dressed dimension

Optional Accessories

- Measuring stand: **971750**

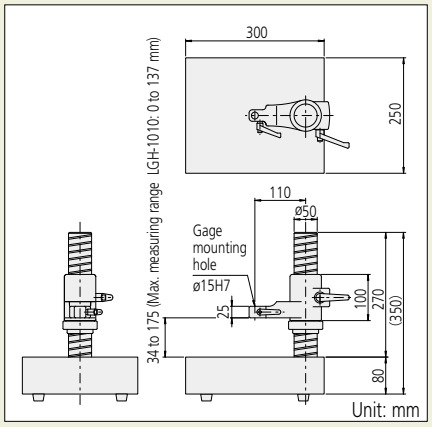

- Spindle lifting cable: **971753**

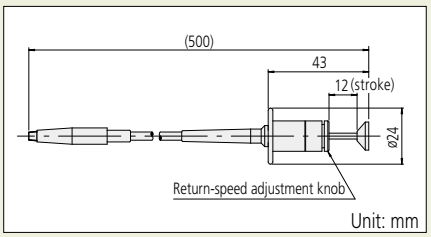

- I/O connector: **02ADB440**

- **SENSORPAK**

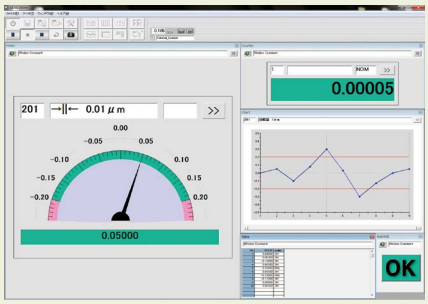

Note: Refer to page G-16 for more details.

- Rubber boot: **238772**
  (Spare for **542-715A** and **542-720A**)

Refer to the Linear Gage Brochure (**2326**) for more details.

SPECIFICATIONS

		Resolution 0.01 µm / Accuracy 0.2 µm model	
Order No.		**542-715A** (Standard)	**542-716A** (Low measuring force)
Measuring range		10 mm	
Resolution		0.01 µm (0.05 µm, 0.1 µm, 0.5 µm, 1 µm can be selected from the counter)	
Measuring accuracy (20 °C)*1		0.2 µm	
Repeatability (20 °C)*1		0.1 µm (2σ)	
Retrace error (20 °C)*1		0.1 µm	
Measuring force	Contact point downwards	0.65 N or less	Approx. 0.12 N
	Contact point horizontal	0.55 N or less	Not applicable
	Contact point upwards	0.45 N or less	Not applicable
Position detection method		Optical reflection type linear encoder	
Detectable operation speed		In normal measurement: 700 mm/sec; for peak detection: 120 mm/sec	
Mass of gage head		Approx. 370 g	
Contact point		Carbide tipped, Sø3 mm (M2.5x0.45), standard contact point: **901312**	
Stem		ø15 mm	
Bearing		Linear ball type	
Output cable length		Approx. 2 m	
Operating temperature (humidity) ranges		0 to 40 °C (Reference temperature 20 °C)/20 to 80% RH (non-condensing)	
Storage temperature (humidity) ranges		–10 to 60 °C/20 to 80% RH (non-condensing)	
Counter Specifications			
Display range		±999.99999 mm	
Functions		Zero-setting, presetting, direction changeover, tolerance judgment (3 steps/5 steps), RS-LINK	
Peak hold function		Yes	
Interface		RS-232C, USB (only for **SENSORPAK**), Digimatic (Printer: **DP-1VA LOGGER**)*3, I/O Connector	
External output		• RS-232C: counting data • Digimatic output: counting data*3 • I/O connector: counting data (simplified BCD), tolerance judgment result, simplified analog output	
External control		Zero-setting, presetting, data hold, peak measurement mode selection, peak clear	
Power supply		Suppplied AC Adapter, or 12 to 24 V DC, max. 700 mA	
Power consumption		8.4 W (max. 700 mA), ensure at least 1 A power supply per unit.	
Mass of counter		Approx. 900 g (AC Adapter excluded)	
Standard accessories		Wrench for contact point, rubber boot, stand, washer (for counter), AC Adapter, AC cord, DC plug, user's manual, inspection certificate	

		Resolution 0.005 µm / Accuracy 0.1 µm model	
Order No.		**542-720A** (Standard)	**542-721A** (Low measuring force)
Measuring range		10 mm	
Resolution		0.005 µm (0.01 µm, 0.05 µm, 0.1 µm can be selected from the counter)	
Measuring accuracy (20 °C)*1		0.1 µm	
Repeatability (20 °C)*1		0.02 µm (2σ)	
Retrace error (20 °C)*1		0.05 µm	
Measuring force	Contact point downwards	0.65 N or less	Approx. 0.1 N
	Contact point horizontal	0.55 N or less	Not applicable
	Contact point upwards	0.45 N or less	Not applicable
Position detection method		Ultra-high accuracy transmission type linear encoder	
Detectable operation speed		In normal measurement: 250 mm/sec	
Mass of gage head		Approx. 370 g	
Contact point		Carbide sphere SR5 (M2.5x0.45), standard contact point: **120058**	
Stem		ø15 mm	
Bearing		Linear ball type	
Output cable length		Approx. 2 m	
Operating temperature (humidity) ranges		15 to 25 °C (Reference temperature 20 °C)/30 to 60% RH (non-condensing)	
Storage temperature (humidity) ranges		–10 to 60 °C/20 to 80% (non-condensing)*2	
Counter Specifications			
Display range		±99.999995 mm	
Functions		Zero-setting, presetting, direction changeover, tolerance judgment (3 steps/5 steps), RS-LINK	
Peak hold function		No	
Interface		RS-232C, USB (only for **SENSORPAK**), Digimatic (Printer: **DP-1VA LOGGER**)*3, I/O Connector	
External output		• RS-232C: counting data • Digimatic output: counting data*3 • I/O connector: counting data (simplified BCD), tolerance judgment result, simplified analog output	
External control		Zero-setting, presetting, data hold	
Power supply		Suppplied AC Adapter, or +12 to 24 V DC, max. 700 mA	
Power consumption		8.4 W (max. 700 mA), ensure at least 1 A power supply per unit.	
Mass of counter		Approx. 900 g (AC Adapter excluded)	
Standard accessories		Wrench for contact point, rubber boot, stand, washer (for counter), AC Adapter, AC cord, DC plug, user's manual, inspection certificate	

*1 Applies when used with counter.
*2 The storage temperature/humidity ranges after unpacking are the same as the operating temperature/humidity ranges.
*3 When using Digimatic output, the format is d1 and is limited to 5 decimal places

Talk to Sales

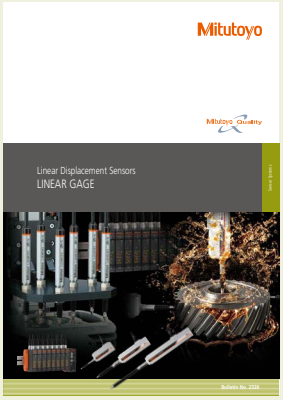

Refer to the Linear Gage Brochure (**2326**) for more details.

Linear Gages

EC Counter
SERIES 542 — For Gages with Digimatic output

- This Digimatic display can be connected to Linear gages with Digimatic output (**LGS**).
- Employs DIN size (96×48 mm) and mount-on-panel configuration to facilitate system integration.
- It has a data output and tolerance evaluation function.

542-007A

Function
- Preset
- Tolerance judgment (3 steps)
- Digimatic output

Optional Accessories
- Connecting cable for digimatic mini-processor: **936937** (1 m), **965014** (2 m)
- DC plug: **214938**
- I/O cable (2 m): **21HZA222**

SPECIFICATIONS

Model		EC-101D
Order No.		**542-007A**
Resolution ( ) indicates maximum display range		0.0005 in (±99.9995 in) 0.001 in (±999.999 in) 0.00005 in (±9.99995 in) 0.0001 in (±99.999 in) 0.01 mm (±9999.99) 0.001 mm (±999.999) [Automatic setting by gage]
Display		Sign plus 6 digits (Green LED)
Tolerance judgment display		LED display (3 steps: Amber, Green, Red)
External output (switching type)	Tolerance judgment output	–NG, OK, +NG (open-collector)
	Data output	Digimatic output
Control input		External PRESET, external HOLD
Power supply	Voltage	Supplied AC adapter, or 9 to 12 V DC
	Consumption	4.8 W (max. 400 mA) Ensure at least 1 A is available per unit.
Operating temperature (humidity) ranges		0 to 40 °C (RH 20 to 80%, non-condensing)
External dimensions		96 (W) ×48 (H) ×84.6 (D) mm
Standard Accessories		AC adapter: **12BAR954** AC cable: **12BAK730**
Applicable gage head		**LGS**, **Digimatic Indicators**
Mass		500 g

G

DIMENSIONS

Unit: mm

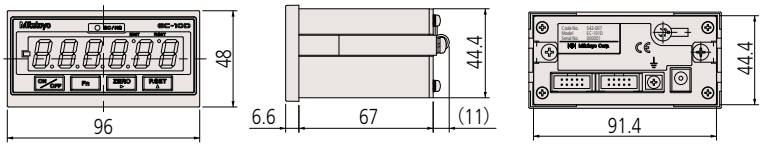

Need Repair?

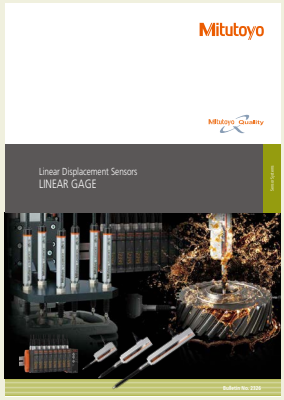

Refer to the Linear Gage Brochure (**2326**) for more details.

Optional Accessories

- I/O output connector (with cover): **02ADB440**
- SPC cable (0.5 m): **02ADD950**
- SPC cable (1 m): **936937**
- SPC cable (2 m): **965014**
- Measurement data loading software: **SENSORPAK** (refer to page G-16)

Note: The Digimatic connecting cable doubles as a RS Link cable.

- Conversion Plugs / Cables
  Plug connection to EH-101P/102P: **21HZA195**
  Plug connection to EH-102Z: **21HZA196**
  Cable connection to EH-101P/102P: **21HZA260**
  Cable connection to EH-102Z: **21HZA261**

Note: Connectable to EH-102Z but the function of reference point detection is disabled.

Refer to the Linear Gage Brochure (**2326**) for more details.

EH Counter
SERIES 542 — Panel Mount, Multi-function Type with RS-232C and I/O Communication Functions

- Two types are available for this model: a 1-axis display and a 2-axis display, both of which enable addition or subtraction calculations between two gages.
- Multifunctional counter equipped with zero-setting, presetting, tolerance judgment.
- RS-232C and USB are equipped as standard. Data transfer to a PC is possible. (USB is supported only by Mitutoyo **SENSORPAK**.)
- A multi-point measuring system (max. 20 points and max. 10 units) can easily be configured with the built-in RS Link networking function. Refer to "Quick Guide to Precision Measuring Instruments" on page G-18 for details of the RS link.
- Employs DIN size (144×72 mm) and mount-on-panel configuration to facilitate system integration.

542-075A

542-071A

542-073A

542-072A

SPECIFICATIONS

Model		EH-101P	EH-102P	EH-102Z	EH-102D
Order No.		**542-075A**	**542-071A**	**542-073A**	**542-072A**
Number of axes to be displayed		1 axis	2 axes		
Origin point detection function		—	—	✔	—
Maximum input frequency		2.5 MHz (2-phase square wave)			—
Resolution ( ) indicates maximum display range		0.0005 in (±99.9995 in)/0.01 mm (±9999.99 mm) 0.00005 in (±9.99995 in)/0.005 mm (±999.995 mm) 0.00005 in (±9.99995 in)/0.001 mm (±999.999 mm) 0.000005 in (±0.999995 in)/0.0005 mm (±99.9995 mm) 0.000005 in (±0.999995 in)/0.0001 mm (±99.9999 mm) [Parameter set]			Automatic setting by gage
Tolerance judgment display		LED display (3 steps: Amber, Green, Red/5 steps: Amber, Amber flashing, Green, Red flashing, Red)			
Interface		RS-232C/USB/parameter selection via digimatic (only **DP-1VA LOGGER**, Digimatic Mini-Processor can be connected) (USB used only with **SENSORPAK**.) Selection by parameter from 3-step, 5-step, or simple BCD Total tolerance judgment output (when tolerance function is enabled) Analog output (1 V to 4 V)			
Input/output	Control output	Open-collector			
	Control input	Display BANK switching, peak mode, presetting, display hold, hold per axis: open-collector or no-voltage contact signal (with/without contact point)			
Power supply	Voltage	Supplied AC adapter, or 12 to 24 V DC			
	Consumption	8.4 W (max. 700 mA) Ensure at least 1 A is available per unit.			
Operating temperature (humidity) ranges		0 to 40 °C (RH 20 to 80%, non-condensing)			
Storage temperature (humidity) ranges		–10 to 50 °C (RH 20 to 80%, non-condensing)			
Standard Accessories		AC adapter: **357651**/ AC cable: **02ZAA010**			
Applicable gage head		**LG100/LG200** A conversion plug **21HZA195** is required (The origin point detection function is disabled)		**LG100/LG200** A conversion plug **21HZA196** is required (The origin point detection function is disabled when connected to **LG200**)	Any gage with Digimatic output: **LGS**, **Digimatic Indicators**, **Digimatic Scale Units**, etc.
Mass		Approx. 760 g	Approx. 800 g	Approx. 800 g	Approx. 800 g

DIMENSIONS

Unit: mm

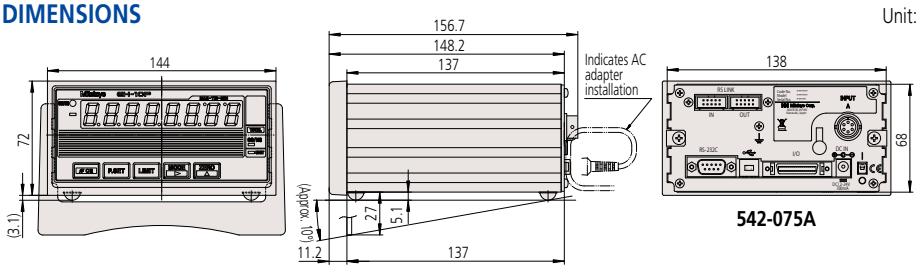

542-075A

Linear Gages

EJ-102N/NE Counter, Interface Unit: CC-Link, PROFINET, EtherNet/IP, EtherCAT, USB
SERIES 542 — Linear Gage Counter

- A modular, high-speed, space-saving counter for linear gage suitable for in-line and general use.
- Up to 8 counters can be linked providing the capacity to connect up to 16 gages.
- DIN rail mountable.
- All linked units can be driven by a single power source.
- Data can be output through an industrial interface by linking a counter with an interface unit.
- Enables sum/difference operations between 2 gages connected to the same counter.

Counter unit

EJ-102N/NE

Interface unit

CC-Link **PROFINET** **EtherNet/IP** **EtherCAT** **USB**

Optional Accessories

- USB Cable - 2m w/ferrite: **64PMI269**
- AC adapter: **357651**
- AC cable*: **02ZAA010**
- DC connector with bar terminal: **21HZA209***

* Required when using AC adapter.

Connectable linear gage Series	Conversion cable (optional)
LGF-Z	Necessary (**21HZA194**)
LGF*/LGK*/LGB*/LG*	Necessary (**21HZA193**)

* The origin point detection function is disabled.

Image of mounting

SPECIFICATIONS

Model		EJ-102N	
Order No.		**542-081A** Includes AC components	**542-081**
Unit		inch/mm	
Resolution		0.0002, 0.00005, 0.00002, 0.000005 (inch)/ 0.005, 0.001, 0.0005, 0.0001 (mm)	
Number of linear gage connection ports		2	
Supported gage signal		Differential square wave, differential square wave with reference point mark	
Maximum input frequency		5 MHz	
User Interface	Display	Negative sign + 8 digits and indicator (1 gage value displayed, manually switchable)	
External I/O	Number of I/O ports	Input: 4 ports (Ch switch, peak clear, data hold, preset) Output: 4 ports (Err/ALLGO, Tolerance judgment)	
	Compatible communication standards	CC-Link, USB (Supported with optional interface units)	
Max. number of linked units		EJ Counter 8 units + 1 (optional) interface unit (Max. number of linear gage connections: 16)	
Power supply	Input voltage	10 V to 27 V DC	
	Power consumption	1 unit only: 3 W or less (Includes 2 linear gages) Max. number of links: 30 W or less (Interface unit and 16 linear gages included)	
Operating temperature (humidity) ranges		0 to 50 °C (RH 20 to 80%, non-condensing)	
Storage temperature (humidity) ranges		-10 to 60 °C (RH 20 to 80%, non-condensing)	
Mass		Approx. 120 g	

Model	Interface unit USB
Order No.	**21HZA149**
Applicable interface	USB 2.0 Full Speed
User Interface	POWER (green)
Functions	Readout of current value, Current value hold (software hold), Parameter setting on **EJ** counter, Tolerance judgment value settings, Preset value settings, preset/zero-set clear, peak clear, error clear
Power supply	Power is supplied from **EJ Counter** (Cannot be charged via USB)
Operating temperature (humidity) ranges	0 to 50 °C (RH 20 to 80%, non-condensing)
Storage temperature (humidity) ranges	-10 to 60 °C (RH 20 to 80%, non-condensing)

Model	Interface unit EtherNet/IP
Order No.	**21HZA188**
Applicable interface	EtherNet/IP
User Interface	POWER (green), NETWORK (green/red), MODULE (green/red), LINK PORT1 (green/amber), LINK PORT2 (green/amber), EJ-CONNECT (green)
Functions	Common protocols for USB and EtherNet/IP Readout of current value, Current value hold (software hold), Parameter setting on **EJ** counter, Tolerance judgment value settings, Preset valuesettings, preset/ zero-set clear, peak clear, error clear
Power supply	Power is supplied from **EJ Counter** (Cannot be charged via USB)
Operating temperature (humidity) ranges	0 to 50 °C (RH 20 to 80%, non-condensing)
Storage temperature (humidity) ranges	-10 to 60 °C (RH 20 to 80%, non-condensing)

SPECIFICATIONS

Model	Interface unit EtherCAT
Order No.	**21HZA264**
Applicable interface	EtherCAT
User Interface	POWER (green), RUN (green), ERROR (red), L/A IN (green), L/A OUT (red), EJ-CONNECT (green)
Functions	Common protocols for USB and EtherCAT Readout of current value, Current value hold (software hold), Parameter setting on **EJ** counter, Tolerance judgment value settings, Preset valuesettings, preset/zero-set clear, peak clear, error clear
Power supply	Power is supplied from **EJ Counter** (Cannot be charged via USB)
Operating temperature (humidity) ranges	0 to 50 °C (RH 20 to 80%, non-condensing)
Storage temperature (humidity) ranges	-10 to 60 °C (RH 20 to 80%, non-condensing)

Model	Interface unit PROFINET
Order No.	**21HZA187**
Applicable interface	PROFINET RT (RT Class1)/USB 2.0 Full Speed
User Interface	POWER (green), NETWORK (green/red), MODULE (green/red), LINK PORT1 (green), LINK PORT2 (green), EJ-CONNECT (green)
Functions	Common protocols for USB and PROFINET, Readout of current value, Current value hold (software hold), Parameter setting on **EJ** counter, Tolerance judgment value settings, Preset value settings, preset/zero-set clear, peak clear, error clear
Power supply	Power is supplied from **EJ Counter** (Cannot be charged via USB)
Operating temperature (humidity) ranges	0 to 50 °C (RH 20 to 80%, non-condensing)
Storage temperature (humidity) ranges	-10 to 60 °C (RH 20 to 80%, non-condensing)

Model		Interface unit CC-Link
Order No.		**21HZA186**
Applicable interface		USB 2.0 Full Speed
		CC-Link Ver. 1.10
		CC-Link Ver. 2.00
User Interface	Display	POWER (green), RUN (green), ERROR (red), EJ-CONNECT (green)
	Switch	Rotary switch×3 (Exchange number settings×2, communication speed settings×1)
Functions		Common protocols for USB and CC-Link, Readout of current value*, Current value hold (software hold), Parameter setting on **EJ** counter, Tolerance judgment value settings, Preset value settings, preset/zero-set clear, peak clear, error clear * For CC-Link, Ver. 1.10 allows for transition only while Ver. 2.00 allows for both cyclic communication and transition.
Power supply		Power is supplied from **EJ Counter** (Cannot be charged via USB)
Operating temperature (humidity) ranges		0 to 50 °C (RH 20 to 80%, non-condensing)
Storage temperature (humidity) ranges		-10 to 60 °C (RH 20 to 80%, non-condensing)

G

DIMENSIONS

EJ-102N/NE

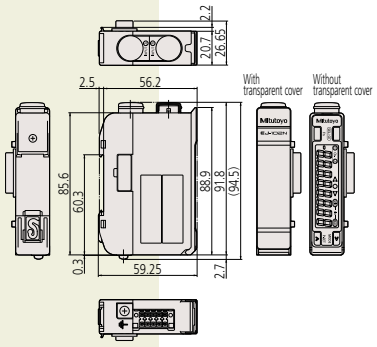

Interface unit CC-Link

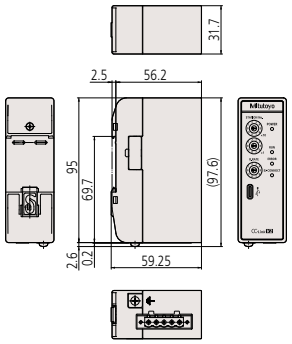

Interface unit PROFINET

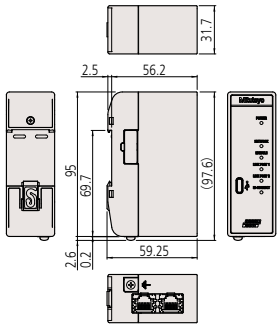

Interface unit EtherNet/IP

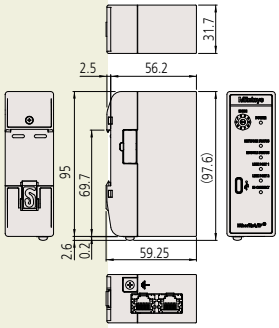

Interface unit EtherCAT

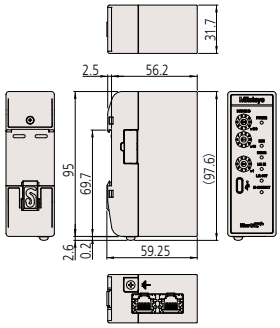

Interface unit USB

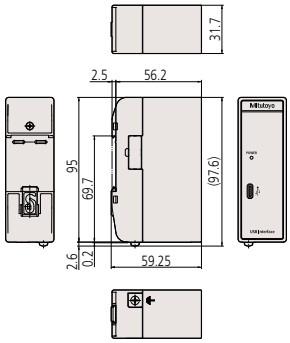

Note: Can be mounted on DIN rail. Case material: PC, POM

Where to Buy

Linear Gages

LG QuickSetupTool Application Software

- For use with EJ Counters when connected to the USB port of any optional interface.
- Intuitive software for setting up the counters and viewing measurement data.
- Data can be saved in CSV format.

Note: This software can be used free of charge and downloaded from the Mitutoyo website. https://www.mitutoyo.co.jp/eng/contact/products/lg/

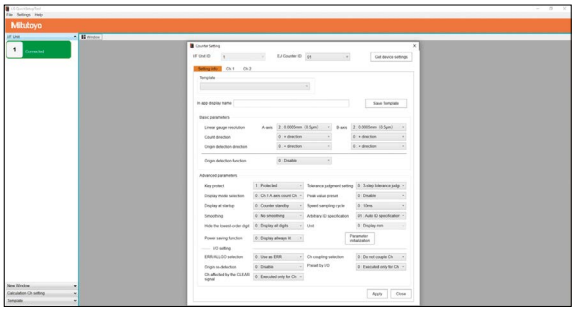

Parameter setting

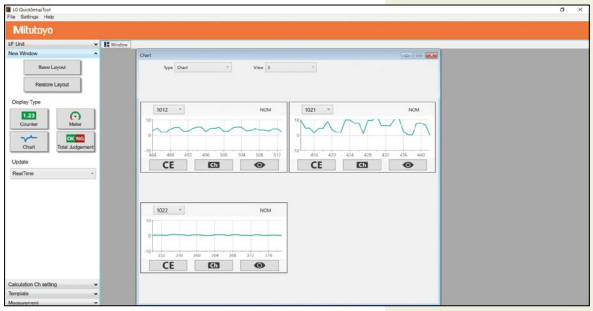

Chart

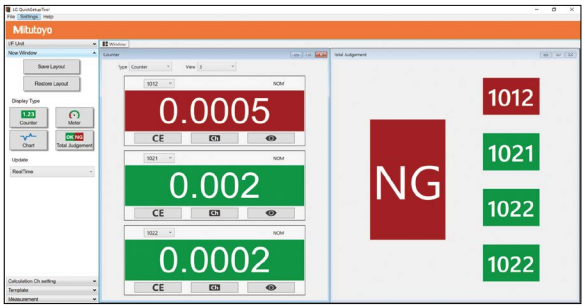

General settings

Recommended system environment

OS: Windows10 Pro 32 bit/64 bit
Display: 1600×1200 or more
Memory: 1024 MB or more
Communication method: USB2.0 (Full speed)
USB connector: Type C connector
Note: USB device drivers are standard Windows drivers.

Refer to the Linear Gage Brochure (**2326**) for more details.

Linear Gages

SENSORPAK
Measurement Data Loading Software

- This software facilitates loading measurement data onto a personal computer with RS-232C output (**EH**, **EV, Litematic**), with USB output (**EH**).
- 60 channels (max.) of measurement data can be processed.
- Arithmetical calculations and maximum width calculations can be performed using the measurement data.
- Exporting measurement data into MS-Excel format is supported (CSV format).
- Real-time graphical display by means of bar-graph or meter is provided.

Measurement screen

Meter screen

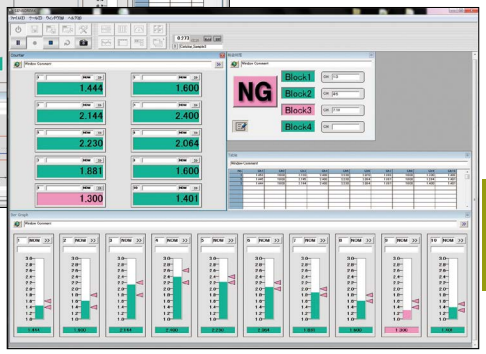
Chart screen

License key

Standard Accessory
- I/O cable: **21HZA137**

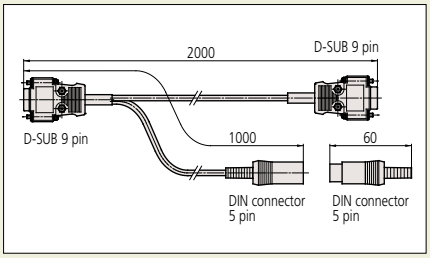

SPECIFICATIONS

Order No.		28AAA506
Product Configuration		Program disk (CD), license key, operation manual
Compatible devices (Connection method)		Mitutoyo RS_LINK compatible devices • **LGH** Series (USB, RS-232C) • **EH** counter (USB, RS-232C) • **EV** counter (RS-232C) • **VL** Litematic (RS-232C)
Connecting cable		• RS-232C connection: I/O cable (**21HZA137**)*1 standard accessory • USB connection: USB cable (type A to type B) • RS-232C connection: RS-232C cross cable*1
Number of connectable gages		Max. 60 units (when 10 units of **EV** counter for linear gage are connected via RS-Link)
Functions	Display*2	Display format: counting, bar graph, indicator, chart, and table Display cycle: 1s (when 60 gage units are connected, 1-window display, and no Excel output)
	Calculation	Calculation (up to 30 items) between designated gages is available. Calculation items: Sum, difference, total, average, maximum, minimum, range (maximum–minimum), calculation with a constant
	Tolerance judgment	Per item: Displays the result in colors (3-step tolerance: red/green/red; 5-step tolerance: red/yellow/green/yellow/red) Total judgment: Displays in colors (red/green) by monitoring the multiple gages and calculation result
	Recording*2	Items: channel values, calculation result, tolerance judgment, total tolerance judgment, timestamp Max. number of records: 60000 for software recording (with 6 gages connected); up to 9000 (with 60 gages connected) Output function: Direct output to Excel, CSV file output (compatible with MeasurLink®) Recording trigger: key, timer, external TRG
	Input/ output*3	Input: TRG for recording (HOLD) Output: Total tolerance judgment result
System Environment		DOS/V compatible PC environment CPU: Pentium4 2 GHz or more, Memory: 2 GB or more, Hard disk: 2 GB or more free space OS: Windows 7 (32 bit/64 bit), Windows 8.1 (32 bit/64 bit), Windows 10, 11 (64 bit)

*1 If the PC is not equipped with an RS-232C port, please contact your nearest M³ Solution Center.
*2 Display cycle and the maximum number of records differ depending on the environment (specification of PC, number of connected gages, display format and communication setting).
*3 With use of the I/O cable (accessory). When an I/O cable is not used, the I/O connector of the counter alternatively functions. (Refer to the user's manual of the counter in use.)

Mitutoyo
Get a Quote

Refer to the Linear Gage Brochure (**2326**) for more details.

Linear Gages

Measurement Examples

Roll gap measurement

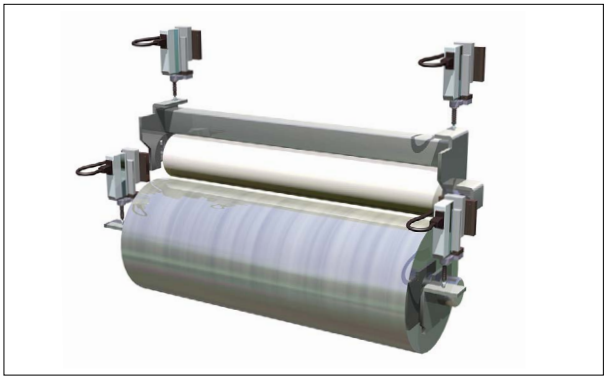

Chip parallelism measurement

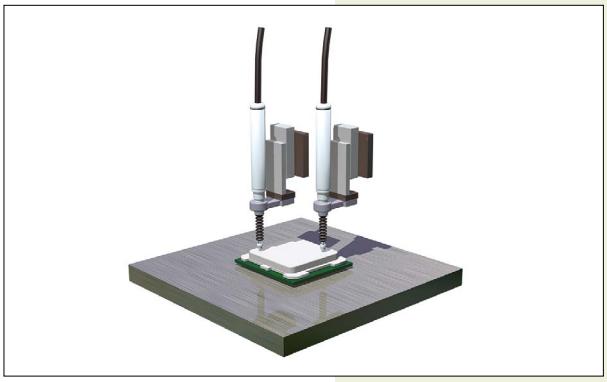

FPD board multipoint measurement

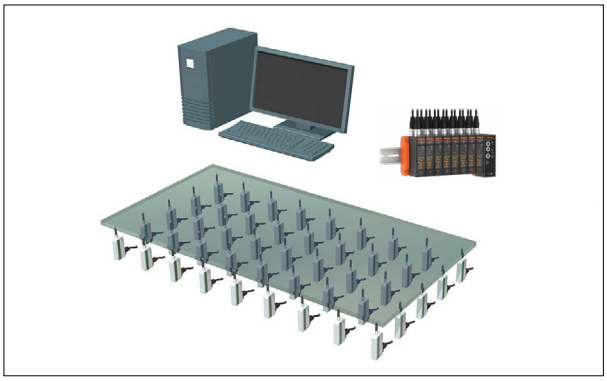

Cam-lift measurement

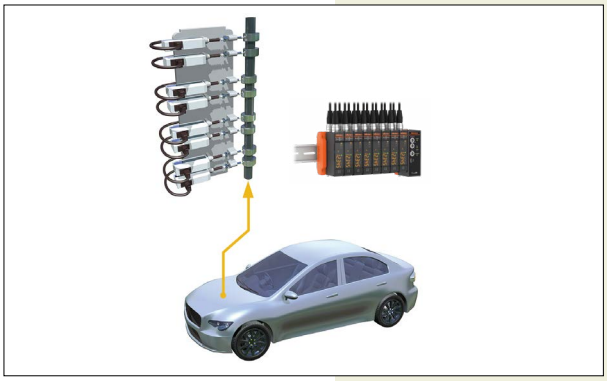

Brake disk multipoint measurement

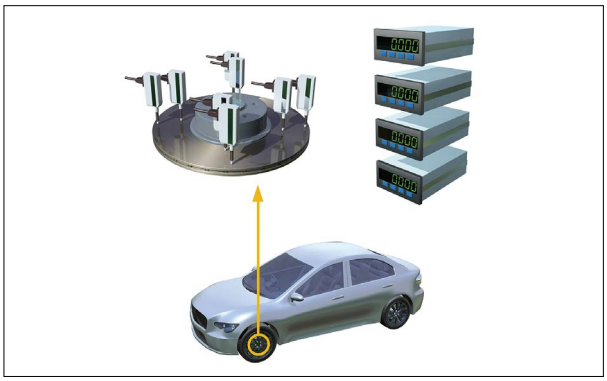

Machine device tool length measurement

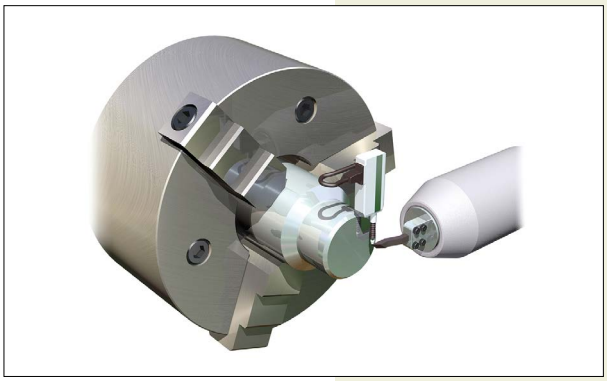

Workpiece discrimination

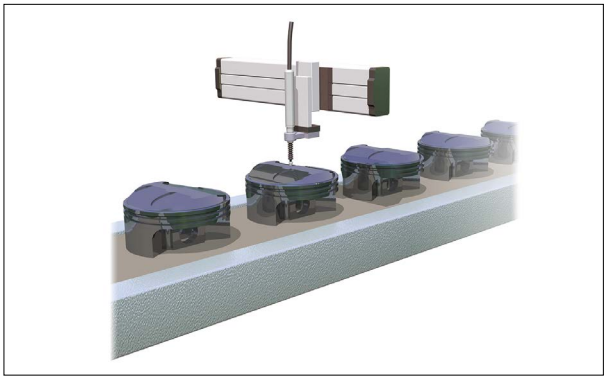

Inspection fixture

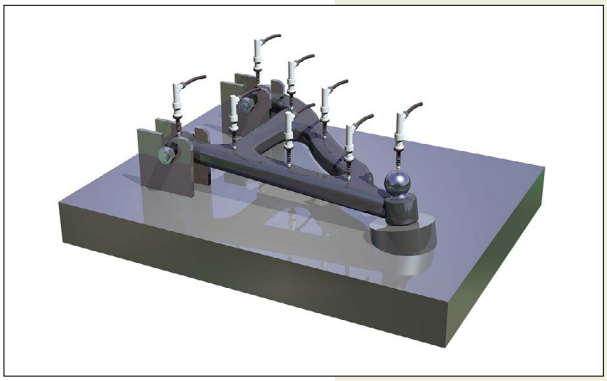

Gage Head

Plain Stem

The plain stem has the advantage of wider application and slight positional adjustment in the axial direction on final installation, although it does requires a split-fixture clamping arrangement or adhesive fixing. However, take care so as not to exert excessive force on the stem.

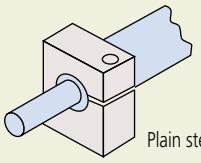

Measuring Force

This is the force exerted on a workpiece during measurement by the contact point of a linear gage head, at its stroke end, expressed in newtons.

Comparative Measurement

A measurement method where a workpiece dimension is found by measuring the difference in size between the workpiece and a master gage representing the nominal workpiece dimension.

Ingress Protection Code

Protection code	Type	Level	Description
IP66	Protection against contact with the human body and foreign objects	6: Dust tight	Protection from dust ingress Complete protection against contact
	Protection against exposure to water	6: Water-resistant type	Water jets directed against the enclosure from any direction shall have no harmful effects.
IP67	Protection against contact with the human body and foreign objects	6: Dust tight	Protection from dust ingress Complete protection against contact
	Protection against exposure to water	7: Immersion-protection	Protection against the effects of immersion in water between 1 cm and 1 m for 30 minutes
IP□□G	Protection against entry of oil	—	Protection against entry of oil droplets or splashes from all directions

Precautions in Mounting a Gage Head

- Insert the stem of the gage into the mounting clamp of a measuring unit or a stand and tighten the clamp screw.
- Notice that excessively tightening the stem can cause problems with spindle operation.
- Never use a mounting method in which the stem is clamped by direct contact with a screw.
- Never mount a linear gage by any part other than the stem.
- Mount the gage head so that it is in line with the intended direction of measurement. Mounting the head at an angle to this direction will cause an error in measurement.
- Exercise care so as not to exert a force on the gage through the cable.

Precautions in Mounting LGH Series

To fix the **LGH** Series, insert the stem into the dedicated stand or fixture.

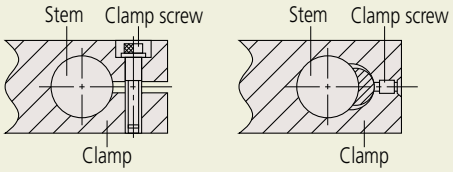

Recommended hole diameter on the fixing side: 15 mm +0.034/+0.014

- Machine the clamping hole so that its axis is parallel with the measuring direction. Mounting the gage at an angle will cause a measuring error.
- When fixing the **LGH** Series, do not clamp the stem too tightly. Over-tightening the stem may impair the sliding ability of the spindle.
- If measurement is performed while moving the **LGH** Series, mount it so that the cable will not be strained and no undue force will be exerted on the gage head.

G

Need Support?

Display Unit

Zero-setting

The display value can be set to 0 (zero) at any position of the spindle.

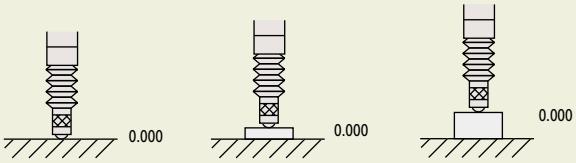

Note: Perform the zero-setting beyond 0.2 mm stroke from the rest position.
This puts the spindle in the guaranteed accuracy region.

Presetting

Any numeric value can be set on the display unit for starting the count from this value.

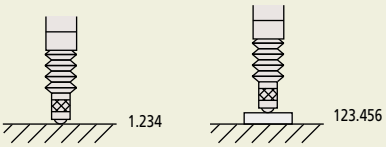

Note: Perform the zero-setting beyond 0.2 mm stroke from the rest position.
This puts the spindle in the guaranteed accuracy region.

Direction Changeover

The measuring direction of the gage spindle can be set to either plus (+) or minus (-) of count.

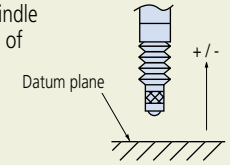

MAX, MIN, TIR Settings

The display unit can hold the maximum (MAX) and minimum (MIN) values, and the run out value (TIR) during measurement.

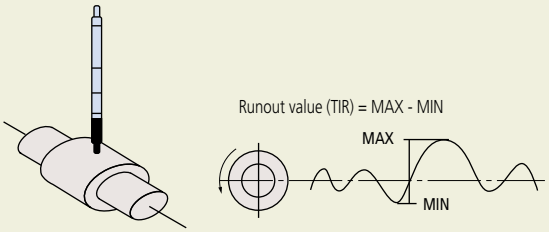

Tolerance Setting

Tolerance limits can be set in various display units for automatically indicating if a measurement falls within those limits.

Open-collector Output

An external load, such as a relay or a logic circuit, can be driven from the collector output of an internal transistor which is itself controlled by a Tolerance Judgment result, etc.

Digimatic Code

A communication protocol for connecting the output of measuring tools with various Mitutoyo data processing units. This allows output connection to a Digimatic Mini Processor **DP-1VA LOGGER** for performing various statistical calculations and creating histograms, etc.

BCD Output

A system for outputting data in binary-coded decimal notation.

RS-232C Output

A serial communication interface in which data can be transmitted bi-directionally under the EIA Standards. For the transmission procedure, refer to the specifications of each measuring instrument.

CC-Link

An abbreviation of Control & Communication Link, the new open field network developed by Mitsubishi Electric Corporation. It is a high-speed field network that allows for control and communication at the same time.

RS Link Function

Multi-point measurement can be performed by connecting multiple **EH** counters with RS Link cables.

RS Link for EH Counter

It is possible to connect a maximum of 10 counter units and handle up to 20 channels of multi-point measurement at a time.
For this connection use a dedicated RS Link cable **02ADD950** (0.5 m), **936937** (1 m) or **965014** (2 m).
(The overall length of RS Link cables permitted for the entire system is up to 10 m.)

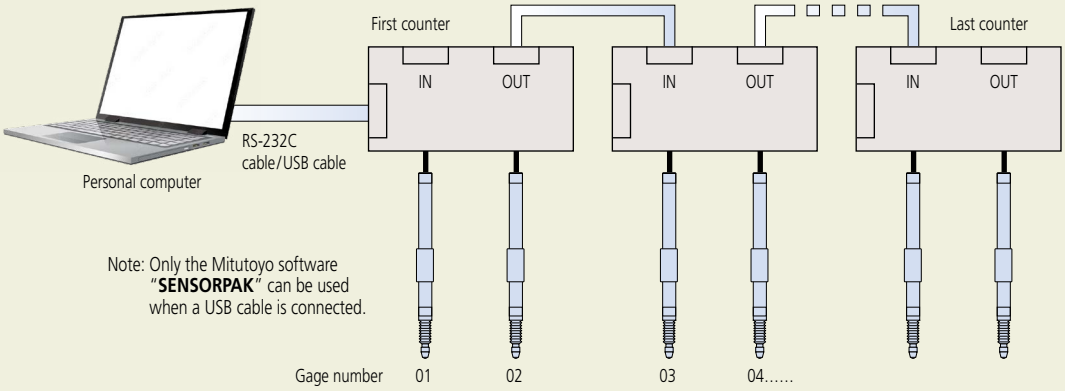

Note: Only the Mitutoyo software "**SENSORPAK**" can be used when a USB cable is connected.

Optional Stand for VL-50S-B

957460 Unit: mm

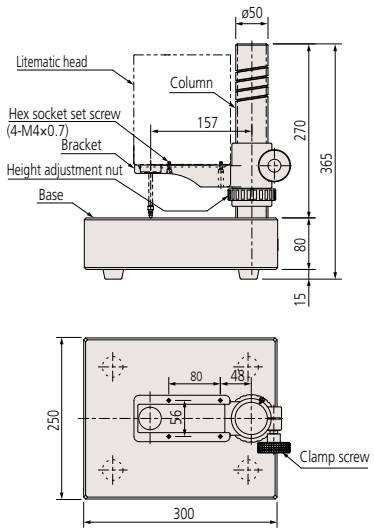

Optional Accessories

- Foot switch: **937179T**
- Dedicated stand: **957460***1
- SPC cable (1 m): **936937***2
- SPC cable (2 m): **965014***2
- VL weight part: **02AZE375***3
- Recommended contact points:
  Shell type: **101118** (Approx. 0.02 N)*4
  Carbide tipped spherical contact point, ø7.5:
  120059 (Approx. 0.03 N)*4
  Carbide tipped spherical contact point, ø10.5:
  120060 (Approx. 0.06 N)*4
  Carbide tipped needle contact point, ø0.45:
  120066 (Approx. 0.01 N)*4

*1 Only **VL-50S** is available.
*2 Refer to page G-18 for details of the RS link.
*3 Not applicable to **VL-50-100-B** and **VL-50S-100-B**
*4 Values in parentheses indicate the measuring force of a 0.01 N model fitted with the respective optional points

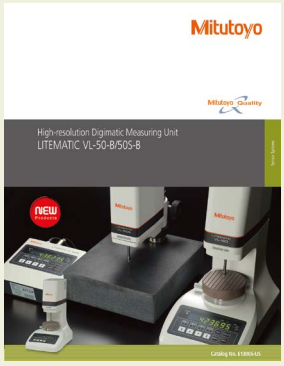

Refer to the Litematic Brochure (**E13006-US**) for more details.

VL-50-B/50S-B Litematic
SERIES 318 — High-accuracy/resolution Measuring Machine

- With a measuring force of only 0.01 N, the Litematic is ideal for measuring easily deformed workpieces or high-accuracy components.
- For workpieces for which 0.01 N is insufficient, either the 0.15 N or 1 N model is recommended.
- The motor-driven spindle moves up/down and stops when the contact point touches the workpiece. Then the maximum, minimum and runout values are measured under a constant force.
- High resolution of 0.01 µm, and wide measuring range of 50 mm.
- Measuring system **VL-50-B**, integrated display type, and **VL-50S-B**, a separate display type, are available.
- The measuring table supplied with **VL-50-B** is ceramic, which is corrosion free, for easier maintenance and storage.
- The spindle is made of low thermal expansion material.

318-221-10A

318-226-10A

Shown with optional granite base, **957460**

SPECIFICATIONS

Model		VL-50-B	VL-50-15-B	VL-50-100-B	VL-50S-B	VL-50S-15-B	VL-50S-100-B
Order No.		**318-221-23**	**318-222-23**	**318-223-23**	**318-226-23**	**318-227-23**	**318-228-23**
Measuring range		0 to 50 mm (0 to 2 in)					
Resolution		0.01/0.1/1.0 µm (0.0000005 in/0.000005 in/0.00005 in)					
Display unit		8 digits/14 mm (0.6 in) character height (without signs)					
Scale type		Reflection type linear encoder					
Stroke		51.5 mm (2 in) (when using a standard contact point)					
Measuring accuracy (20 °C)*1		(0.5 + L/100) µm L=arbitrary measuring length (mm)					
Accuracy guaranteed temperature*2		20±1 °C					
Repeatability*1		σ=0.05 µm					
Measuring force*1		0.01 N	0.15 N*3	1 N*3	0.01 N	0.15 N*3	1 N*3
Feed speed	Measurement	Approx. 2 mm/s (0.08 in/s) or 4 mm/s (0.16 in/s) (changeable by parameter)					
	Fast feed	Approx. 8 mm/s (0.3 in/s)					
Contact point		ø3 mm carbide tipped (fixing screw: (M2.5x0.45), standard contact point: **901312**					
Measuring table		ø100 (ceramic, grooved, removable)			—		
Input		Foot switch input (when optional foot switch is used) External Control					
Output		Digimatic output/RS-232C output (changeable by parameter)					
Rating	Power consumption	Max. 18W (12V, 1.5A)					
Standard Accessories		AC adapter: **357651**, Grounding wire: **09CAA985**, AC cable: **02ZAA010** Hex wrench (2 pcs. for fixing contact point and for removing fixing bracket)					

*1 Normal measurement using standard contact point.
*2 Under less temperature change, and hot or cold direct air flow should be avoided.
*3 0.15 N, 1 N types are factory-installed option.
Note: Motor life is approximately 100,000 operations, after which replacement is advisable.
This maintenance factor is particularly important to bear in mind when the machine is used frequently, such as on a production line.

DIMENSIONS

318-221-10A

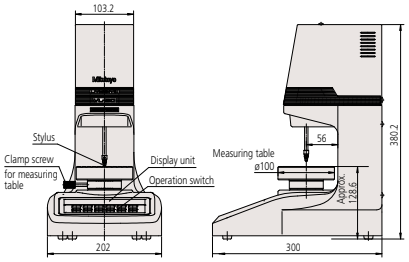

318-226-10A Unit: mm

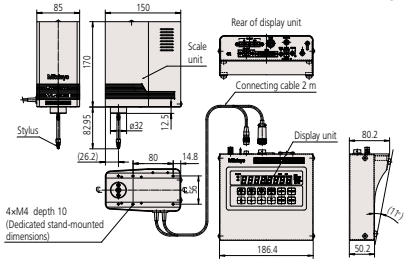

Mu-checker

Display Unit (analog/digital) SERIES 519

- Switchable measurement ranges make the Mu-checker suitable for a range of applications, especially those that involve moderately fast-changing measurement values which suit the use of analog readout.
- Single touch zero-set function is standard.
- Two types of analog display are available and one digital type.

Digital Mu-checker

Digital Mu-checker

SPECIFICATIONS

	Dual Input
Model	**M-562**
Order No.	**519-562A**
Type	Differential type digital Mu-Checker (2 connecting heads)
Display range	±2.000 mm/±0.2000 mm/±0.08 in/±0.008 in
Resolution	0.001 mm/0.0001 mm/0.00005 in/0.000005 in
Differential mode	±A, ±B, ±A±B
Measurement mode	ABS/CMP
Analog output	±1 V at full-scale reading
Digital output	Digimatic code out
External dimensions	134 (W) ×183 (D) ×208 (H) mm
Mass	Approx. 2.6 kg
Power input	AC adapter 100, 120, 220, 240 V AC 50/60 Hz
Probe	Various probes (refer to pages G-21 and G-22)

G

Standard type

Differential type

Analog Mu-checker

SPECIFICATIONS

	Dual Input	Single Input
Model	**M-554**	**M-553**
Order No.	**519-554A**	**519-552A**
Type	Differential type (one/two probes required)	Standard type (one probe required)
Display range	±5 µm/±15 µm/±50 µm/±150 µm/±500 µm/±1500 µm ±0.00015 in/±0.0005 in/±0.0015 in/±0.005 in/±0.015 in/±0.05 in	±5µm/±15µm/±50µm/±150µm/±500µm/±1500µm ±.00015"/±.0005"/±.0015"/±.005"/±.015"/±.05"
Graduation	0.1 µm/0.5 µm/1 µm/5 µm/10 µm/50 µm 0.000005 in/0.00001 in/0.00005 in/0.0001 in/0.0005 in/0.001 in	0.1µm/0.5µm/1µm/5µm/10µm/50µm .000005"/.00001"/.00005"/.0001"/.0005"/.001"
Differential mode	±A, ±B, ±A±B	±A
Display accuracy (linearity)	±1% of full-scale reading	
Analog output	±1.0 V at full-scale reading	
Analog output accuracy	Within ±0.1% of full-scale reading (excluding probe)	
Zero-setting adjustment range	±15%/FS (error: ±0.2%/FS)	
External dimensions	134 (W) ×183 (D) ×208 (H) mm	
Mass	2.4 kg	
Power input	AC adapter 100, 120, 220, 240 V AC 50/60 Hz	
Probe	Various probes (refer to pages G-21 and G-22)	

Optional Accessories

- SPC Cable for connecting digital Mu-checker (**936937**)
Used for connecting to the Digimatic mini-processor.
(Not suitable for analog Mu-checkers)
- Output cable A (**934795**)
Used for connecting to external devices, such as data recorders, etc.

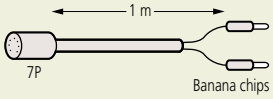

- Analog, limit out (7P) connector (**529035**)
Used for output to external data recorders, sequencers, etc.

Lever/Cartridge Probe Heads
SERIES 519 — Electronic Micrometer

Common specifications
- Connection: Half-bridge
- Cable length: 2 m
- Connector type: MAS-5100 (DIN5P) or equivalent

SPECIFICATIONS
Lever heads

Model	MLH-521	MLH-522	MLH-326	MLH-327
Order No.	**519-521**	**519-522**	**519-326**	**519-327**
Measuring range (mm)	±0.5			
Stroke (mm)	±0.6			±0.65
Measuring force (N)	Approx. 0.2	Approx. 0.02	Approx. 0.15	
Linearity (%)	±0.3			±0.5
Stylus support	Pivot bearing	Pivot bearing	Parallel-leaf spring	Pivot bearing

Note: A ø2 mm ball-ended stylus is supplied as standard with all probes.

519-521
MLH-521

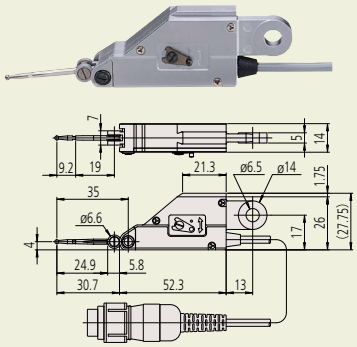

- Interchangeable styli:
  - ø1: **520940** (Standard accessory)
  - ø2: **520939** (Standard equipment)
  - ø3: **520938** (Standard accessory)

Unit: mm

519-522
MLH-522

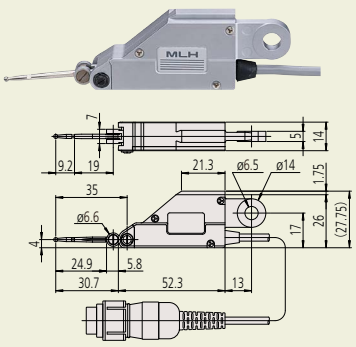

- Interchangeable styli:
  - ø1: **520940** (Standard accessory)
  - ø2: **520939** (Standard equipment)
  - ø3: **520938** (Standard accessory)

Unit: mm

519-326
MLH-326

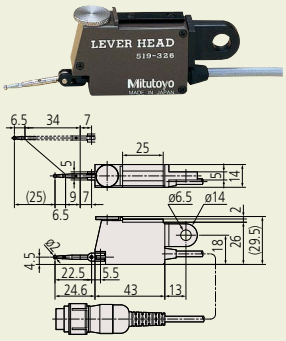

- Interchangeable styli:
  - ø1: **102824** (Optional)
  - ø2: **102825** (Standard equipment)
  - ø3: **102826** (Optional)
- Extension bar
  L=9 mm (Standard equipment)
  L=34 mm (When a bar for extending the distance to the stylus tip is supplied)

Unit: mm

519-327
MLH-327

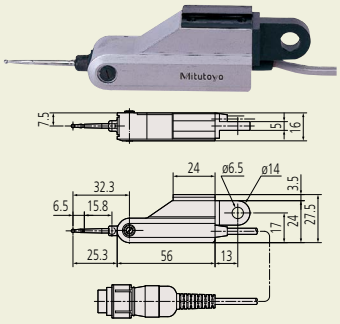

- Interchangeable styli:
  - ø1: **102824** (Optional)
  - ø2: **102825** (Standard equipment)
  - ø3: **102826** (Optional)

Unit: mm

Transfer Stand

519-109-10
(with a serrated plate)

Unit: mm

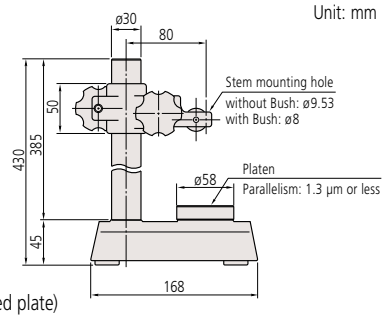

Main Specifications

Order No.	Effective transfer range (mm)	Fine adjustment range (mm)	Mounting hole (mm)
519-109-10	0 - 320	1	Without Bush: ø9.53 With Bush: ø8

Note on stylus angle

If the stylus of a pivot bearing type probe makes an angle with a workpiece surface, as in the figure, calibration should be performed for accurate measurement. Alternatively, the displayed value may be corrected by multiplying it by the appropriate correction factor as given in the table.

Model **519-326** does not need correction.

Angle (θ)	Correction factor
0°	1.00
10°	0.98
20°	0.94
30°	0.87
40°	0.77
50°	0.64
60°	0.50

Display value × Correction factor = Corrected value

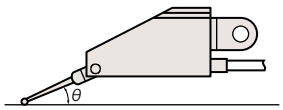

Dimensions of dovetail plate on probe body

Enables mounting on a lever head mounting bracket or stem.

Unit: mm

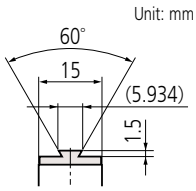

G

Mitutoyo

Mu-Checker

EV-16A Counter
SERIES 519 — 6-channel, No-display Type

- Up to six probes can be connected to one unit. Up to ten counters can be connected to one personal computer using the RS Link function to enable the configuration of a multi-point measurement system comprising a maximum of 60 gages.
- I/O outputs for RS-232C, BCD, tolerance judgment and segment output are available.
- Maximum, minimum and runout measurement between channels (in the same unit) is possible in addition to normal measurement on individual channels.

519-355
EV-16A

SYSTEM CONFIGURATION

Mitutoyo probes, **EV-16A** counters and **D-EV** display units combined with commercial controllers and personal computers enable construction of a powerful, multi-channel system that can be built to meet the needs of almost any measurement application.

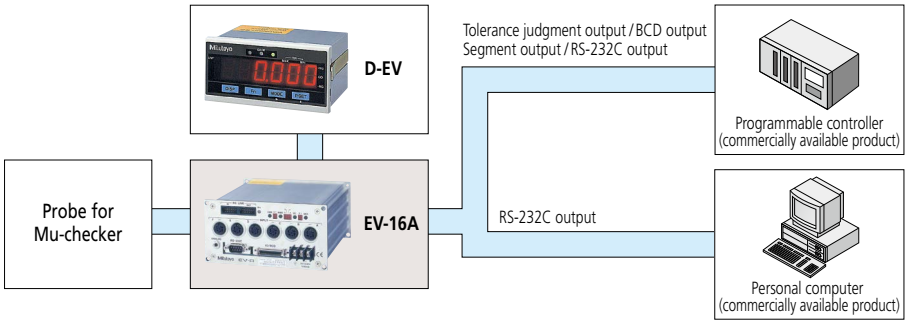

Unit: mm

Main features

- External control (Zero-set, Preset etc.)
- Direction switching
- Error messaging
- Tolerance judgment output
- Each data output (RS-232C, BCD, segment)
- Peak measurement (maximum value, minimum value, runout) and arithmetic operation (addition, average, maximum value, minimum value, maximum width) between axes

Optional Accessories

- Output connector: **02ADB440**
- D-EV External display unit*1: **02ADD400**
- SPC cable (0.5 m): **02ADD950**
- SPC cable (1 m): **936937**
- SPC cable (2 m): **965014**
- AC adapter: **357651**
- AC cable: **02ZAA010**
- Terminal connecting cable: **02ADD930**

*1 Refer to page G-25 for details of D-EV.

- **SENSORPAK**

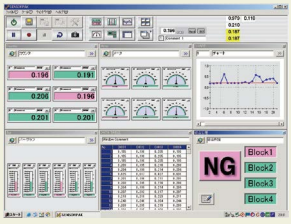

Note: Refer to page G-16 for more details.

SPECIFICATIONS

Model		EV-16A
Order No.		**519-355**
Number of gage inputs		6
Display range (mm)		±2.000, ±0.200
Resolution (mm)		0.001, 0.0001
Display processing		8 digits for parameters (display setting), 1 for error display
Error messaging		Power supply voltage error, Gage error, etc.
External display		Dedicated external display unit **D-EV** (optional) can be connected
Number of input switches		4
Input switch function		Measurement mode switching, Parameter settings
I/O	Tolerance judgment output	1 to 6 gages (L1, L2, L3), open-collector
	BCD output	Parallel BCD output (positive/negative-true logic), open-collector
	Segment output	A function to enable only output from the terminal corresponding to the counting values, open-collector
	Control output	Normal operation signal (NOM), open-collector
	Control input	Output channel designation (segment, in BCD mode), presetting, peak value clear, range changeover (at segment output), holding counting value, open-collector or no-voltage contact signal (with/without contact point)
Interface	RS-232C	Measurement data output and control input, EIA RS-232C-compatible Use cross cables for home position DTE (terminal definition)
	RS link	Max. connected units: 10 Connecting cable length: Max. 10 m (sum of link cable length) Data transfer time: 1.1 sec./60 ch (when transmission rate is 19200 bps)
Power supply	Voltage	12 to 24 V DC (Terminal block: M3)
	Consumption	1 A
Operating temperature (humidity) ranges		0 to 40 °C (RH 20 to 80%, non-condensing)
Storage temperature (humidity) ranges		-10 to 50 °C (RH 20 to 80%, non-condensing)
External dimensions		144 (W) ×72 (H) ×139 (D) mm
Mass		Approx. 1000 g
Standard accessories		Fixing foot (4), connecting bracket (4), fixing screw M4×8 (8)
Applicable probes		For probes, refer to pages G-21 and G-22.

DIMENSIONS

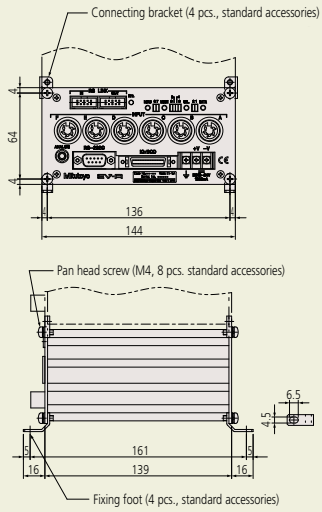

D-EV
Display Unit for the EV Counter

- Display unit for the **EV** counter.
- Connecting this display unit helps configuration of the **EV** counter.
- Able to display each gage measurement value and Go/No-go judgment result, total Go/No-go judgment result for all gages, setting details and errors.

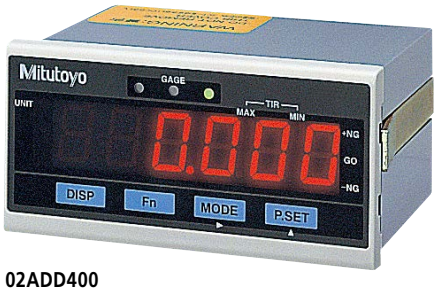

02ADD400

Optional Accessories
- AC adapter: **357651**
- AC cable: **02ZAA010**
- Terminal connecting cable: **02ADD930**

SPECIFICATIONS

Model	**D-EV**
Order No.	**02ADD400**
Number of connections	1 **EV** counter per unit
Number of digits	Sign plus 6 digits (8 digits internal to **EV** counter)
LED display	Channel display (also for judgment result display): 3 (3-color LED) Measurement mode display (current data, maximum value, minimum value, runout): 2 Status display: 1 (2 colors)
Operation switches	4
Function of operation switch	Channel switching, measurement mode switching (current data, maximum value, minimum value, runout), parameter setting, presetting, tolerance setting
Input/output	RS Link connectors: 1 each for IN, OUT
Error message	Overspeed, gage error etc.
Power supply	12 to 24 V DC, 200 mA (Terminal block: M3)
Operating temperature (humidity) ranges	0 to 40 °C (RH 20 to 80%, non-condensing)
Storage temperature (humidity) ranges	–10 to 50 °C (RH 20 to 80%, non-condensing)
External dimensions	96 (W) ×48 (H) ×84.6 (D) mm
Mass	150 g

DIMENSIONS

Unit: mm

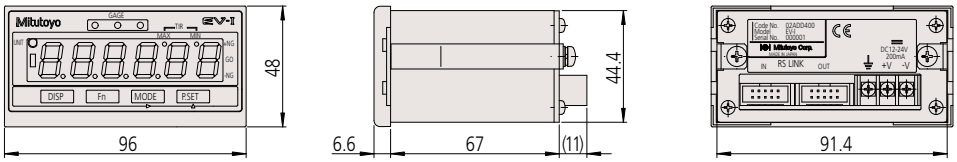

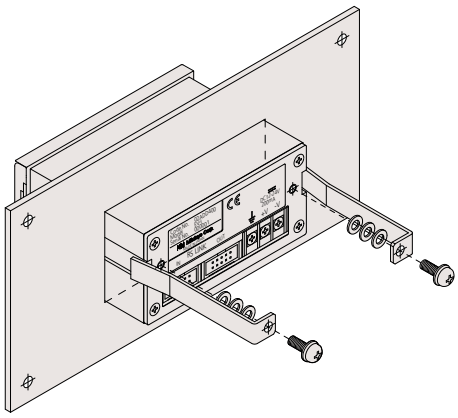

G

Need Service?

Probe
A sensor that converts movement of a contact point, on a stylus or plunger, into an electrical signal.

Lever probes
Lever probes are available in two types. The most common type uses a pivoted stylus so the contact point moves in a circular arc; this type is subject to cosine effect and, therefore, measurements may require linearity correction if the direction of measurement is much different to the direction of movement of the contact point. The less common type uses a parallel translation leaf-spring mechanism so contact point movement is linear; this type requires no correction.

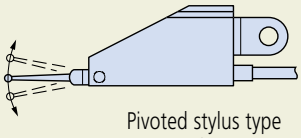

Pivoted stylus type
519-521 (measuring direction can be switched with the up/down lever)
519-522 (measuring direction is not switchable)

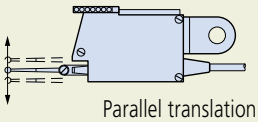

Parallel translation type
519-326 (measuring direction can be switched with the upper dial)

G

Pre-travel
The distance from first contact with a workpiece until the measurement indicator reads zero.

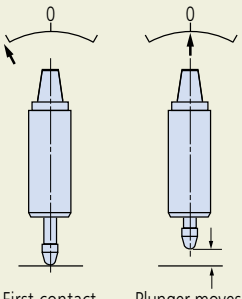

First contact. Plunger moves until the indicator reads zero.

Measuring force
The force applied to the workpiece by the probe when the indicator registers zero. It is indicated in newtons (N).

Digimatic code
A communication protocol for connecting the output of measuring tools with various Mitutoyo data processing units. This allows output connection to a Digimatic Mini Processor **DP-1VA LOGGER** for performing various statistical calculations and creating histograms, etc.

Open-collector output
A direct connection to the collector of a driving transistor.

Comparative measurement
A measurement method where a workpiece dimension is found by measuring the difference in size between the workpiece and a master gage that represents the nominal dimension.
This method is usually applied when the measurement to be made is greater than the measuring range of the instrument.

Linearity
The ratio of proportionality between measuring system output and measured distance.
If this is not constant within acceptable limits then correction is required.

0 (zero) point
A reference point on the master gage in a comparative measurement.

Sensitivity
The ratio of the electric micrometer output signal to the input signal to the amplifier. The sensitivity is normal if a value as expected from the given displacement is displayed.

Tolerance setting
Tolerance limits can be set on the electronic micrometer to provide an automatic judgment as to whether a measured value falls within the tolerance.

Lever-head angle
Before measurement, be sure to confirm that probe sensitivity adjustment has been completed.
Changing the probe angle will cause variation in the measured values.
Adjust the probe angle to obtain an optimum sensitivity before starting measurement. If it is difficult, adjust the sensitivity with the probe angle set to 0°, and after measurement, correct the measured values according to the actual probe angle (by multiplying the measured value by a correction factor).

Tips Correction using a correction factor may result in lower accuracy than when adjusting sensitivity with the actual probe angle.

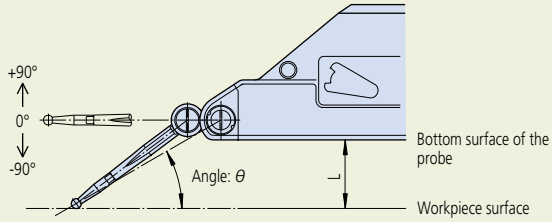

Angle: θ	Distance from the workpiece surface: L *	Correction factor
0°	—	1.00
10°	Approx. 3.1 mm	Approx. 0.98
20°	Approx. 8.8 mm	Approx. 0.94
30°	Approx. 13.9 mm	Approx. 0.87
40°	Approx. 18.3 mm	Approx. 0.77
50°	Approx. 21.6 mm	Approx. 0.64
60°	Approx. 23.8 mm	Approx. 0.50

* Value when using a carbide probe with spherical diameter of ø2 that is installed before shipment. When using a ø1 (or ø3) carbide probe, subtract (or add) 1/2 of the difference in spherical diameter.

SurfaceMeasure-S Series

- The sensor itself is guaranteed for accuracy and has a Z-axis repeatability of 0.5 µm or less. It has also achieved the IP67 protection level, providing stable measurements.
- The SurfaceMeasure-S Series can obtain the profiles and three-dimensional shapes of measurement workpieces at high speed (a maximum frame rate of 10 kHz) and make an automatic judgement inside the sensor.
- It is also equipped with a parts matching function that allows the measurement tool to be applied throughout, regardless of the orientations of the parts being measured. Measurements can be taken without performing alignment.
- The software supports intuitive operation and is built into the sensor (software installation is not required), so you can use it immediately after mounting.

APPLICATIONS

Automobile industry
Panel gap inspection

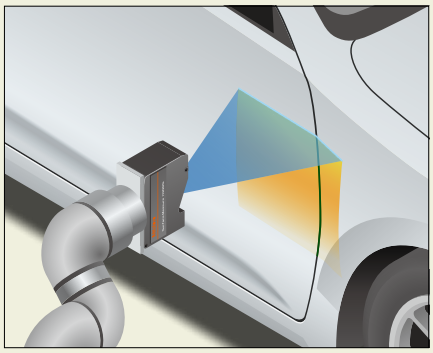

Electric vehicle battery industry:
Cell assembly inspection

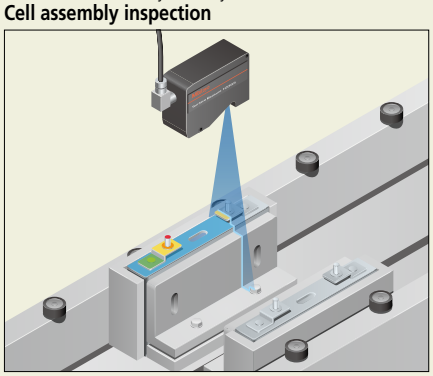

Electrical and electronic industries
Connector pin inspection

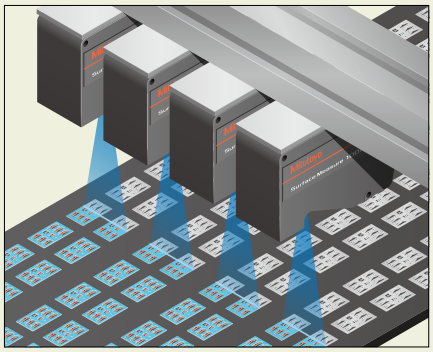

Electrical and electronic industries
Adhesive inspection

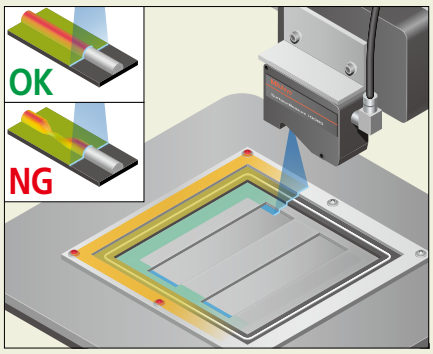

PRODUCT STRUCTURE

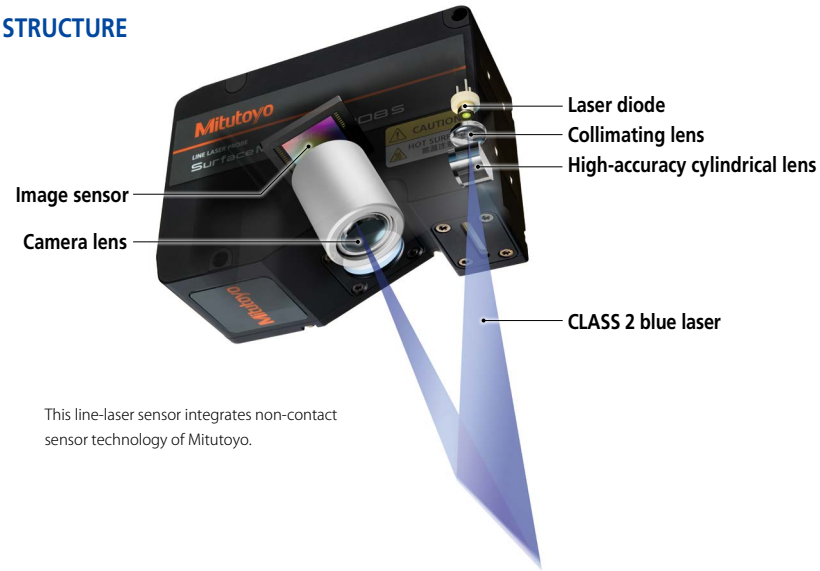

This line-laser sensor integrates non-contact sensor technology of Mitutoyo.

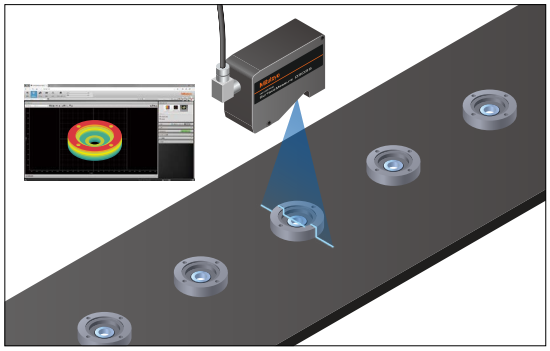

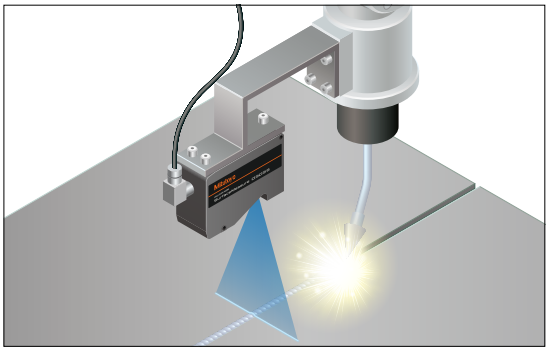

Non-contact Sensors

SOFTWARE

Powerful interface with excellent operability and functionality

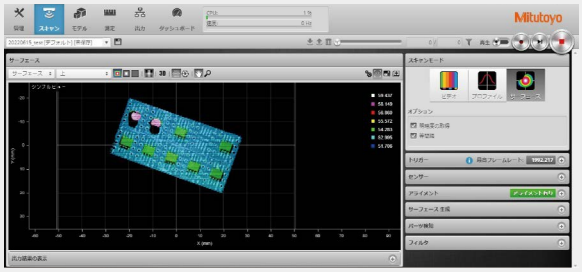

- Excellent operability simply by using a mouse
- Simple and intuitive interface
- Web browser-based, no need to install software
- Various built-in measurement tools
- 2D and 3D data can be obtained

↓

Easy-to-configure measuring system

Measurement tool

A variety of measurement tools are available.

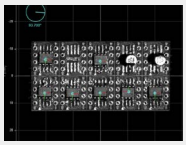
Pattern matching

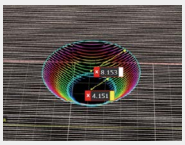
Countersink Hole

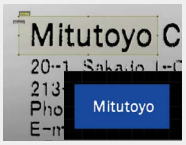

OCR

Gap & Flush

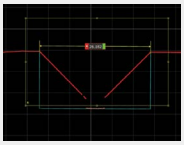
Groove

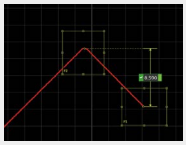
Size

Emulator

Using the emulator makes it possible to consider measurement conditions or make an analysis with obtained data even when offline.

SYSTEM

System configuration (example)

This is an example of the system configuration of the SurfaceMeasure-S Series. Various other system configurations are also available.

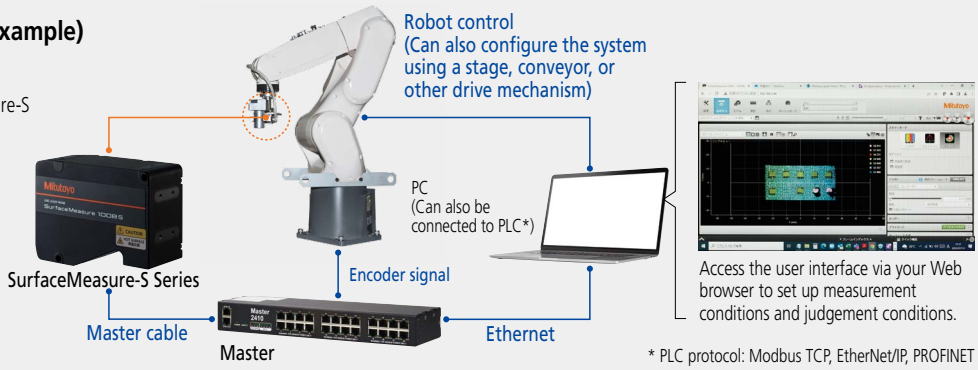

* PLC protocol: Modbus TCP, EtherNet/IP, PROFINET

Need Calibration?

Non-contact Sensors

SPECIFICATIONS

Model		1008S	0303S	2929S
Order No.		**553-100**	**553-110**	**553-120**
Maximum measuring width		100 mm	32.5 mm	292 mm
Measuring range		80 mm	25 mm	290 mm
Working distance		80 mm	60 mm	299.5 mm
Scanning error (1 σ) *1		20 µm	9 µm	65 µm
Z axis repeatability		0.5 µm	0.4 µm	1.2 µm
Frame rate		Max. 10 kHz		
Laser class	EN / IEC	CLASS 2		
		(IEC 60825-1:2014, EN 60825-1:2014+A11:2021)		
	JIS	CLASS 2 (JIS C 6802: 2014)		
Line laser	Laser medium	Semiconductor laser		
	Wavelength	405 nm (visible)		
	Max. output	2.2 mW		
Mass		650 g		1480 g
Operating environment	Temperature	0 °C to 40 °C		
	Humidity	RH 20 to 80%, non-condensing		
Storage environment	Temperature	-30 °C to 70 °C		
	Humidity	RH 20 to 95%, non-condensing		
IP code		IP 67 *2		
Power supply (power consumption)		24 to 48 VDC (15 W)		

*1 Accuracy inspection environment: Temperature 20 °C ± 1 °C, Humidity 50%RH ± 10%RH
Measurement workpieces: Specified reference ball for inspection (ϕ25 mm)
Inspection method: Determined by Mitutoyo-specified inspection method.
The operating environment and the storage environment are different from the guaranteed accuracy environment.
*2 Measuring accuracy may deteriorate if any water droplet or dust particle adheres to the optical path.

DIMENSIONS

Unit: mm

SurfaceMeasure1008S

Measuring range

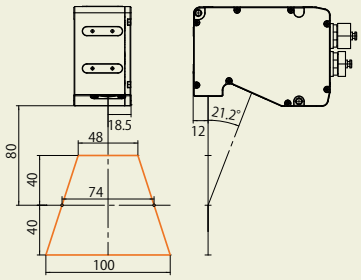

Mounting size

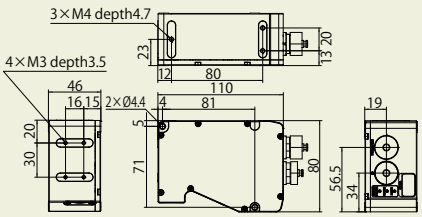

SurfaceMeasure0303S

Measuring range

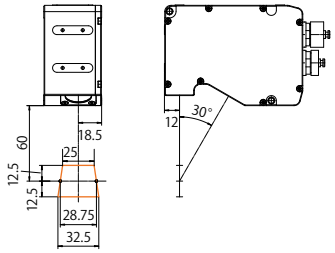

Mounting size

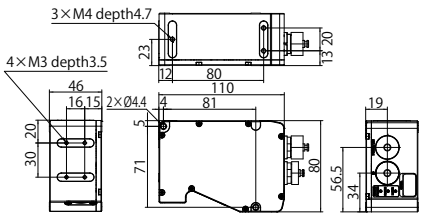

SurfaceMeasure2929S

Measuring range

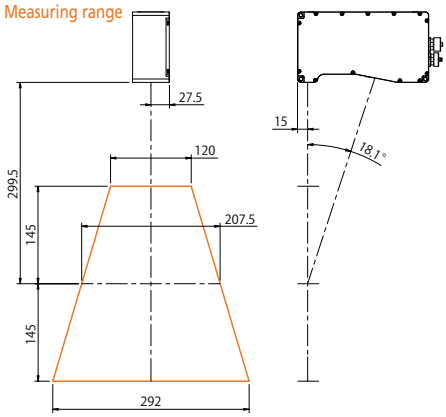

Mounting size

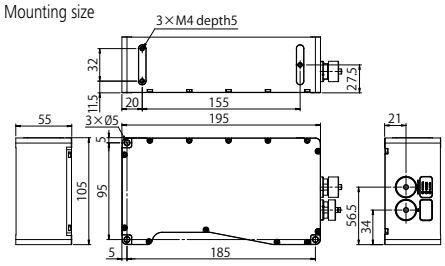

Non-contact Sensors

Master810

Master2410

Sensor networking hub Master

Device used for distributing power to sensors and synchronizing the sensors in the multi-sensor system
Input: Power supply 24 to 48 V, Laser Enable input, Encoder input, External input

Order No.	Product Name	Remarks
02AQL401	Master810	Accepting a maximum of 8 sensors
02AQL402	Master2410	Accepting a maximum of 24 sensors

Master cable

Cable for the connection between sensor and Master

Specifications	
Sensor side	M16 connector (Straight or 90° upward-pointing can be selected)
Power supply side	RJ45 (Connect to Master)
Communication side	RJ45 (Ethernet connection)

Order No.	Product Name	Remarks
02AQL373	2 m Power and Ethernet Master	2×RJ45 ends
02AQL374	5 m Power and Ethernet Master	2×RJ45 ends
02AQL375	10 m Power and Ethernet Master	2×RJ45 ends
02AQL376	15 m Power and Ethernet Master	2×RJ45 ends
02AQL377	20 m Power and Ethernet Master	2×RJ45 ends
02AQL378	25 m Power and Ethernet Master	2×RJ45 ends
02AQL391	2 m Power and Ethernet Master 90deg	2×RJ45 ends, 90° connector
02AQL392	5 m Power and Ethernet Master 90deg	2×RJ45 ends, 90° connector
02AQL393	10 m Power and Ethernet Master 90deg	2×RJ45 ends, 90° connector
02AQL394	15 m Power and Ethernet Master 90deg	2×RJ45 ends, 90° connector
02AQL395	20 m Power and Ethernet Master 90deg	2×RJ45 ends, 90° connector
02AQL396	25 m Power and Ethernet Master 90deg	2×RJ45 ends, 90° connector

Power and Ethernet cable

Cable to supply and control power without using the Master for the sensor

Specifications	
Sensor side	M16 connector (Straight or 90° upward-pointing can be selected)
Power supply side	Flying lead
Communication side	RJ45 (Ethernet connection)

Order No.	Product Name	Remarks
02AQL367	2 m Power and Ethernet	1×Open wire end, 1×RJ45 end
02AQL368	5 m Power and Ethernet	1×Open wire end, 1×RJ45 end
02AQL369	10 m Power and Ethernet	1×Open wire end, 1×RJ45 end
02AQL370	15 m Power and Ethernet	1×Open wire end, 1×RJ45 end
02AQL371	20 m Power and Ethernet	1×Open wire end, 1×RJ45 end
02AQL372	25 m Power and Ethernet	1×Open wire end, 1×RJ45 end
02AQL385	2 m Power and Ethernet 90deg	1×Open wire end, 1×RJ45 end, 90° connector
02AQL386	5 m Power and Ethernet 90deg	1×Open wire end, 1×RJ45 end, 90° connector
02AQL387	10 m Power and Ethernet 90deg	1×Open wire end, 1×RJ45 end, 90° connector
02AQL388	15 m Power and Ethernet 90deg	1×Open wire end, 1×RJ45 end, 90° connector
02AQL389	20 m Power and Ethernet 90deg	1×Open wire end, 1×RJ45 end, 90° connector
02AQL390	25 m Power and Ethernet 90deg	1×Open wire end, 1×RJ45 end, 90° connector

GoMax NX

Arithmetic unit to accelerate measurement processing without a PC

Specifications	
NVIDIA module	Jetson Xavier NX
CPU	6-core NVIDIA Carmel ARM v8.2
GPU	Volta GPU, 384 CUDA core, 48 Tensor core
Memory	Onboard 8 GB LPDDR4
Storage	Onboard 16 GB eMMc
I/O	2-port Ethernet
Power supply	12 to 24 V, Max. 15 W
Weight	2.1 kg
Operating temperature	-15 to 55°C
Mounting	DIN rail, wall mounting

Order No.	Product Name	Remarks
02AQL420	GoMax NX	Power plug type: B UL•CSA•PSE

I/O cable

Cable to connect the external I/O device to the sensor

Specifications	
Sensor side	M16 connector (Straight or 90° upward-pointing can be selected)
I/O device side	Flying lead
Encoder input (2-phase square-wave signals Phase A, Phase B, Phase Z), Trigger input, Digital output, RS-485 output	

Note: Sensors cannot be synchronized by the signals input to and output from each sensor through this cable.

Order No.	Product Name	Remarks
02AQL361	2 m I/O	Open wire end
02AQL362	5 m I/O	Open wire end
02AQL363	10 m I/O	Open wire end
02AQL364	15 m I/O	Open wire end
02AQL365	20 m I/O	Open wire end
02AQL366	25 m I/O	Open wire end
02AQL379	2 m I/O 90deg	Open wire end, 90° connector
02AQL380	5 m I/O 90deg	Open wire end, 90° connector
02AQL381	10 m I/O 90deg	Open wire end, 90° connector
02AQL382	15 m I/O 90deg	Open wire end, 90° connector
02AQL383	20 m I/O 90deg	Open wire end, 90° connector
02AQL384	25 m I/O 90deg	Open wire end, 90° connector

Laser Micrometers

In-line, Non-contact Measuring System / Laser Scanning Micrometer

APPLICATION

Catheter and magnetic wire measurements

Roller bearing measurements

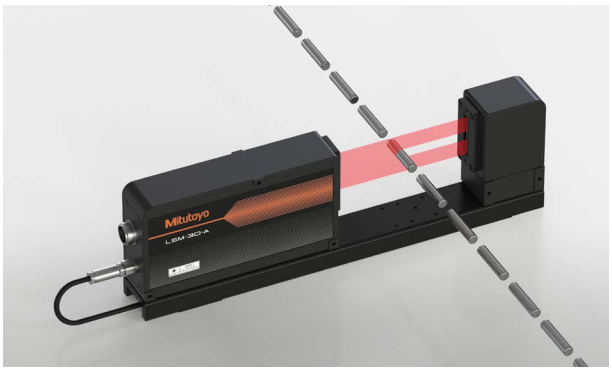

Simultaneous measurements of roller outer diameter and deflection

Film sheet thickness measurements

Note: The laser in the image is for illustrative purposes only.

SYSTEM CONFIGURATION

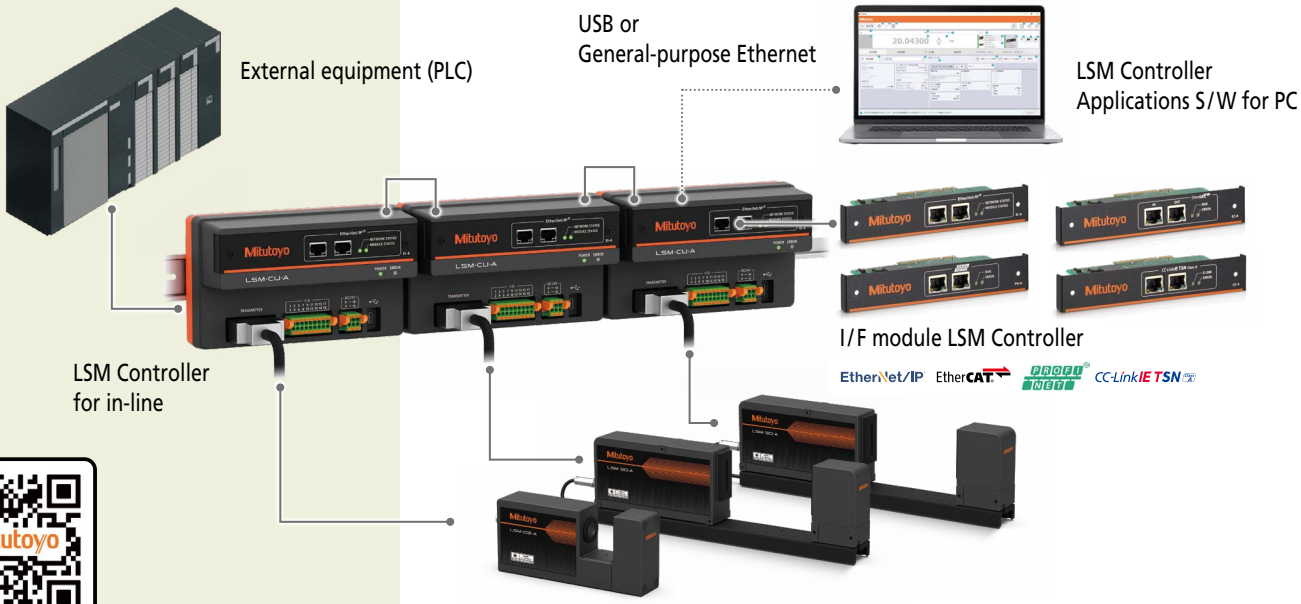

Schedule Service

G

Mitutoyo

Laser Micrometers

Laser Scanning Micrometer

LSM-30-A LSM-02-A

- Proven accuracy developed by one of the most reputable precision measurement instrument manufacturers.
  - Guaranteed repeatability of 2 σ
    LSM-02-A (ø1 mm): ±0.015 µm
    LSM-30-A (ø10 mm): ±0.06 µm
  - Guaranteed linearity:
    LSM-02-A: ±0.3 µm
    LSM-30-A: ±1.0 µm
- Compact body for **LSM-02-A,** ensuring versatile installation.
- **LSM-30-A** is a separable sensor with an emission/reception unit that can be used independently.
- Equipped with an ultra-fine wire measurement mode, capable of measuring outer diameters as small as 5 µm.
- **IP67** rated for durability.
- High-accuracy scanning facilitated by a precision motor.
- Scanning rate: **3,200** scans/s

LSM-CU-A

- Compact, thin design to fit seamlessly into distribution boards or equipment.
- Entire unit, including the cable, can be stored within a 100 mm deep distribution board.
- Tool-free mounting on a DIN rail.
- Equipped with USB Type-C, I/O ports, and optional industrial interfaces.
- Standard configuration software included for user-friendly setup.
- Unit can be rotated 90 degrees for flexible layout options.

I/F module

- Choose from four interface types to match your production line requirements.
- Controller design allows for module insertion without altering the layout.

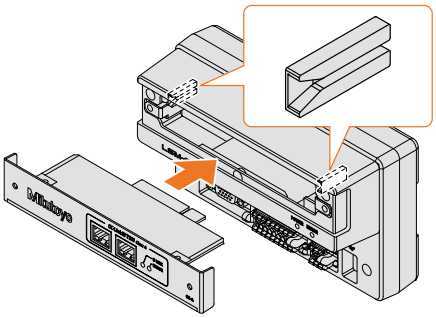

EtherNet/IP

PROFINET

EtherCAT

CC-Link IE TSN

Optional Packages

64PKA299	2 mm LSM basic package
64PKA300	2 mm LSM package with tablet
64PKA301	30 mm LSM basic package
64PKA302	30 mm LSM package with tablet
64PKA303	40-90 mm dual LSM kit with tablet
64PKA304	90-140 mm dual LSM kit with tablet
64PKA305	140-180 mm dual LSM kit with tablet
64PKA306	40-90 mm dual LSM kit with tablet
64PKA307	90-140 mm dual LSM kit with tablet
64PKA308	140-180 mm dual LSM kit with tablet

Optional Accessories

02AGD490	Adjustable workstage - 544-124
02AGD270	Workstage - 544-124
02AGD110	Calibration gage set - 544-123
02AGD130	Calibration gage set - 544-124
02AGD200	Wire guiding pulley - 544-123
02AGQ450	Air shield
02AGQ452	Laser beam stabilization shield
02AGN780A	5m Extension signal cable
02AGD420	Additional V-block for 02AGD490
02AGD430	Additional Stop for 02AGD490

Need Integration Help?

SENSOR UNIT — COMPATIBLE WITH 544-121 CONTROLLER (NOT COMPAT. W/LSM-6200)

SPECIFICATIONS

Model		LSM-02-A	LSM-30-A
Order No.		**544-123**	**544-124**
Measuring range		0.005 to 2 mm 0.05 to 2 mm	0.3 to 30 mm
Resolution		0.01 µm	0.01 µm
Repeatability (2σ	Full range Middle range	ø 2 mm: ±0.03 µm ø 1 mm: ±0.015 µm	ø 30 mm:±0.09 µm ø 10 mm:±0.06 µm
Linearity		±0.3 µm	Whole range: ±1.0 µm Narrow range:±(0.6+0.1 ⊿ D) µm
Positional error		±0.4 µm	Full range (10×30): ±1.8 µm Middle range (5×20): ±1.0 µm
Measuring region		1×2 [optical axis depth]×[scanning width] mm	10×30 [optical axis depth]×[scanning width] mm
Number of scans for averaging		16 to 2048 scans	1 to 2048 scans
Laser Class		Semiconductor laser: CLASS 1 (Max. output: 1.0 mW, Laser wavelength: 650 nm)	
Scanning rate		3200 scans/s	
Laser scanning speed		76 m/s	226 m/s
Protection level		IP67	
Distance between the emission unit and reception unit		–	Standard: 130 mm, Max.: 350 mm
Operating environment		Temperature: 0 °C to 40 °C, Humidity: 35%RH to 85%RH (non-condensing) Altitude: 2000 m or less	
Storage temperature		Temperature: -10 °C to 50 °C, Humidity: 35%RH to 85%RH (non-condensing)	
CE Marking/UKCA Marking		EMC Directive: EN IEC 61326-1, Immunity test requirements: Clause 6.2 Table 2 Emission limit: Class A RoHS Directive: EN IEC 63000	
Standard accessory		Signal cable: **02AGQ190** CD (User's Manual): **02AGQ039**	

G

CONTROLLER — COMPATIBLE WITH 544-123, 544-124 (NOT COMPAT. W/544-5XX)

SPECIFICATIONS

Model		LSM-CU-A
Order No.		**544-121 (mm/inch switchable type)**
Measuring functions	Segment mode	1 to 7 (1 to 3, transparent)
	Edge mode	1 to 255
	Averaging method	Arithmetic average: from 1 to 2048, Moving average: from 32 to 2048
	Functions	Transparent object measurement, Ultra-fine wire mode (LSM-02-A only), Simultaneous measurement of two items, Automatic workpiece detection, Outlier elimination, Judgment (lower limit/upper limit, multi-limit tolerance zone, target value and tolerance value), Dirt detection for protective glass, Sample measurement, Analog output, Parameter setting (Measurement condition): 20, Workpiece position, Calibration, Presetting, Offset, Statistical analysis, Calculation of two or more sets, Sensor model identification
Standard I/F	Indicator	[POWER] LED (green), [ERROR] LED (red)
	Signal cable connector	Mini D-Sub (15 pins)
	USB connector	Type-C
	I/O connector	Separate terminal block (18 pins)
	Power supply connector	Separate terminal block (6 pins)
Power supply		DC+24 V±10%, 3.0 A or more
Operating temperature		Temperature: 0 °C to 50 °C, Humidity: 20%RH to 80%RH (non-condensing) Altitude: 2000 m or less
Storage temperature		Temperature: -10 °C to 60 °C, Humidity: 20%RH to 80%RH (non-condensing)
Mass		Approx. 550 g
CE Marking/UKCA Marking		EMC Directive: EN IEC 61326-1, Immunity test requirements: Clause 6.2 Table 2 Emission limit: Class A RoHS Directive: EN IEC 63000
Standard accessory		Socket for I/O terminal block: **D800-396**, Socket for power supply terminal block: **D827-827** Grounding wire (4 m): **02AGQ068** CD (LSMPAK installer, User's Manual): **02NGA070**

Laser Micrometers

INTERFACE UNIT

SPECIFICATIONS

Model		LSM-EI-A	LSM-EC-A
Order No.		**02AGQ300**	**02AGQ370**
Communication standards		EtherNet/IP	EtherCAT
Interface	LED	NETWORK STATUS Indicator: Dual Color LED1 (red/green)	RUN Indicator: Single Color LED1 (green)
		MODULE STATUS Indicator: Dual Color LED1 (red/green)	ERROR Indicator: Single Color LED1 (red)
	RJ45 connector	2 channels	
Ethernet communication	Communication port	RJ45 × 2	
	Communication speed	100 Mbps Full duplex	
	Cable used	Cat.5e or more STP cable	

Model		LSM-PN-A
Order No.		**02AGQ350**
Communication standards		PROFINET
Interface	LED	RUN Indicator: Dual Color LED1 (red/green)
		ERROR Indicator: Dual Color LED1 (red/green)
	RJ45 connector	2 channels
Ethernet communication	Communication port	RJ45 × 2
	Communication speed	100 Mbps Full duplex
	Cable used	Cat.5e or more STP cable
PROFINET function	PROFINET RT	Conformance class B PROFINET device Media redundancy protocol (MRP) client Multicast provider and subscriber
	Min. cycle time	2 msec
	Maximum number of connections (ARs*1)	2
	Number of CRs*2 per connected controller	For cyclic data: 2, For parameter setting: 1

Model		LSM-CC-A
Order No.		**02AGQ390**
Communication standards		CC-Link IE TSN
Interface	LED	D Link: Dual Color LED1 (red/green)
		ERROR: Single Color LED1 (red)
	RJ45 connector	2 channels
Ethernet communication	Communication port	RJ45×2
	Communication speed	100 Mbps Full duplex
	Cable used	Cat 5e or more STP cable
CC-Link IE TSN function	CC-Link IE TSN	Class A remote station
	Min. cycle time	1 msec

*1 AR: Application Relation, Type of AR: Device Access
*2 CR: Communication Relation

Find Training

Measurement Examples

Measurement of outside diameter of rubber roll

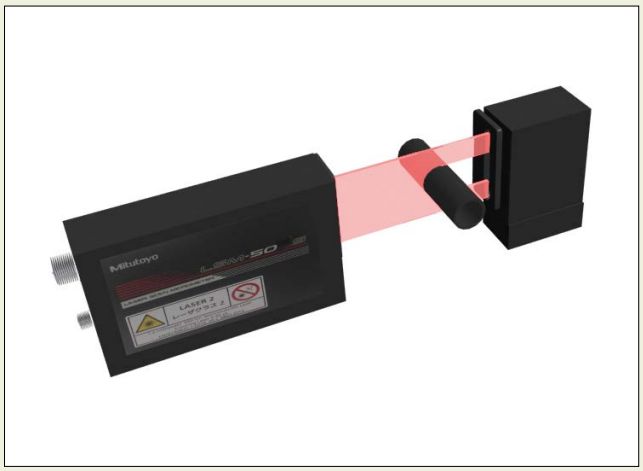

Simultaneous measurement of roller outside diameter and deflection

Measurement of uneven thickness of film or sheet (simultaneous measurement)

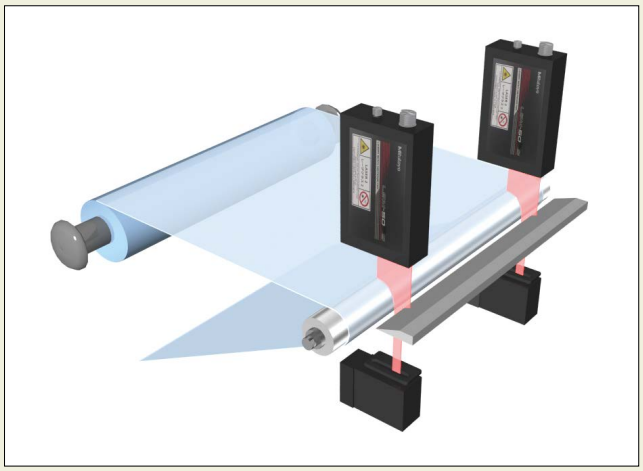

Measurement of gap between rollers

Measurement of film sheet thickness

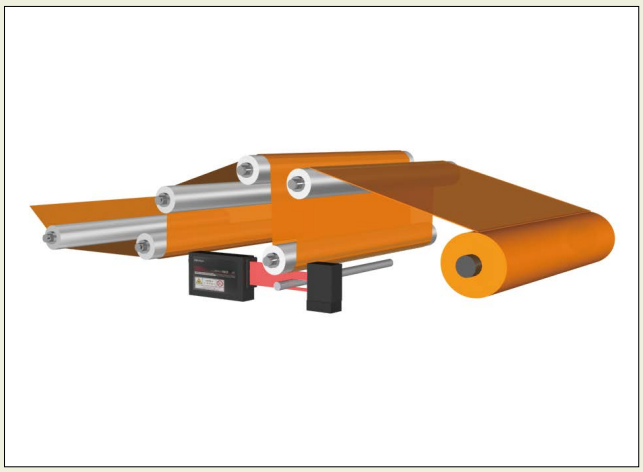

Dual system for measuring a large outside diameter

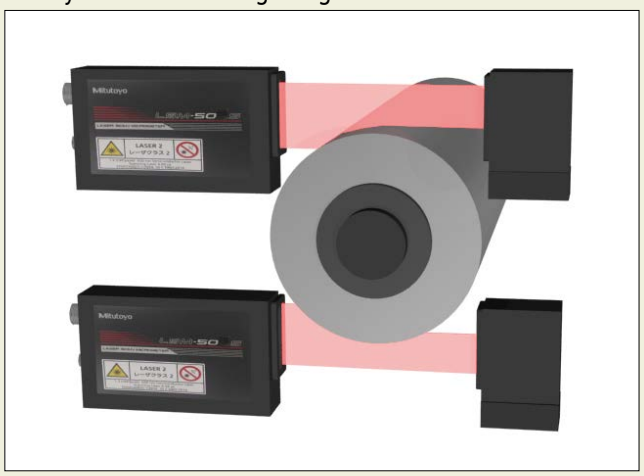

G

Laser Scan Micrometer

LSM-503S Measuring Unit SERIES 544 — 0.3 mm to 30 mm Measuring Unit

- Ensures ±1.0 µm accuracy over the entire measuring range (0.3 to 30 mm).
- The industry's first narrow-range accuracy performance in this measuring range of ±(0.6+0.1ΔD) µm is available for high-accuracy measurement.

SPECIFICATIONS

Order No. (Laser only)		**544-536**
Package No. (Laser w/LSM 6200 display)		**64PKA119**
Applicable laser standards		IEC, FDA
User's manual		English version
Measuring range		.012" to 1.18" (0.3 to 30mm)
Resolution		.000001" to .005" (0.02 to 100µm) (selectable)
Repeatability*1		±0.11µm
Accuracy*2 (20°C)	Whole range	±1.0µm
	Small range	±(0.6+0.1ΔD)µm*3
Positional error*4		±1.5µm
Measuring area*5		10×30mm (0.3 to 30mm)
Scanning rate		3200 scans/s
Laser wavelength		650nm (Visible)
Laser scanning speed		226m/s
Operating environment	Temperature	0 to 40°C
	Humidity	RH 35 to 85% (no condensation)
Protection Level		IP64*6

*1: Determined by the value of ±2σ (σ: standard deviation) when measuring ø30mm at the interval of 0.32 sec. (average 1024 times).
*2: Center of the measuring range for cylindrical workpieces outside diameter.
*3: ΔD=Difference in diameter between the master gage and workpiece (Unit: mm).
*4: An error of the outside diameter due to variation in workpiece position either in the optical axis direction or in the scanning direction.
*5: The area given by [optical axis direction]×[scanning direction].
*6: The protection level provided for the interior. If the workpiece or glass of the measuring unit window is soiled by water or dust, the unit may malfunction.

Optional Accessories

- Multifunctional display unit, **LSM-6200**:

Order No.	Display type	Remarks
542-072A	English mm/in	English user's manual

- Panel-mount type display unit, **LSM-5200**:

Order No.	Remarks
544-047	English user's manual

- Standard calibration gage set (ø1.0, ø30.0): **02AGD130**
- Adjustable workstage: **02AGD490**
- Air blower: **02AGD240**
- Workstage: **02AGD270**
- Extension signal cable (max. 25 m)

Order No.	Cable length
02AGN780A	5 m
02AGN780B	10 m
02AGN780C	15 m
02AGN780D	20 m

- Extension relay cable (max. 5 m)

02AGC150A	1 m
02AGC150B	3 m
02AGC150C	5 m

G

LSM-506S Measuring Unit SERIES 544 — 1 mm to 60 mm Measuring Unit

- Ensures ±3 µm accuracy over the entire measuring range (1 to 60 mm).
- The industry's first narrow-range accuracy performance in this measuring range of ±(1.5+0.5ΔD) µm is available for high-accuracy measurement.

SPECIFICATIONS

Order No. (Laser only)		**544-538**
Package No. (Laser w/ LSM 6200 display)		**64PKA120**
Applicable laser standards		IEC, FDA
User's manual		English version
Measuring range		.040" to 2.36" (1 to 60mm)
Resolution		.000002" to .005" (0.05 to 100µm) (selectable)
Repeatability*1		±0.36µm
Accuracy*2 (20°C)	Whole range	±3µm
	Small range	±(1.5+0.5ΔD)µm*3
Positional error*4		±4µm
Measuring area*5		20×60mm (1 to 60mm)
Scanning rate		3200 scans/s
Laser wavelength		650nm (Visible)
Laser scanning speed		452m/s
Operating environment	Temperature	0 to 40°C
	Humidity	RH 35 to 85% (no condensation)
Protection Level		IP64*6

*1: Determined by the value of ±2σ (σ: standard deviation) when measuring ø60mm at the interval of 0.32 sec. (average 1024 times).
*2: Center of the measuring range for cylindrical workpieces outside diameter.
*3: ΔD=Difference in diameter between the master gage and workpiece (Unit: mm)
*4: An error of the outside diameter due to variation in workpiece position either in the optical axis direction or in the scanning direction.
*5: The area given by [optical axis direction]×[scanning direction].
*6: The protection level provided for the interior. If the workpiece or glass of the measuring unit window is soiled by water or dust, the unit may malfunction.

Optional Accessories

- Multifunctional display unit, **LSM-6200**:

Order No.	Display type	Remarks
542-072A	English mm/in	English user's manual

- Panel-mount type display unit, **LSM-5200**:

Order No.	Remarks
544-047	English user's manual

- Standard calibration gage set (ø0.1, ø60.0): **02AGD140**
- Adjustable workstage: **02AGD520**
- Air blower: **02AGD250**
- Extension signal cable (max. 25 m)

Order No.	Cable length
02AGN780A	5 m
02AGN780B	10 m
02AGN780C	15 m
02AGN780D	20 m

- Extension relay cable (max. 5 m)

02AGC150A	1 m
02AGC150B	3 m
02AGC150C	5 m

Laser Scan Micrometer

LSM-512S Measuring Unit
SERIES 544 — 1 mm to 120 mm Measuring Unit

- Ensures ±6 µm accuracy over the entire measuring range (1 to 120 mm).
- The industry's first narrow-range accuracy performance in this measuring range of ±(4.0+0.5ΔD) µm is available for high-accuracy measurement.

With signal cable (5 m)
02AGN770A

Optional Accessories

- Multifunctional display unit, **LSM-6200**:

Order No.	Display type	Remarks
542-072A	English mm/in	English user's manual

- Panel-mount type display unit, **LSM-5200**:

Order No.	Remarks
544-047	English user's manual

- Heavy Duty Adjustable Workstage: **K542965**
- Standard calibration gage set (ø20.0, ø120.0): **02AGD150**
- Air blower: **02AGD260**
- Extension signal cable (max. 25 m)

Order No.	Cable length
02AGN780A	5 m
02AGN780B	10 m
02AGN780C	15 m
02AGN780D	20 m

- Extension relay cable (max. 5 m)

02AGC150A	1 m
02AGC150B	3 m
02AGC150C	5 m

SPECIFICATIONS

Order No. (Laser only)		**544-540**
Package No. (Laser w/ LSM 6200 display)		**64PKA121**
Applicable laser standards		IEC, FDA
User's manual		English version
Measuring range		.040" to 4.72" (1 to 120mm)
Resolution		.000005" to .005" (0.1 to 100µm) (selectable)
Repeatability*1		±0.85µm
Accuracy*2 (20°C)	Whole range	±6µm
	Small range	±(4.0+0.5ΔD)µm*3
Positional error*4		±8µm
Measuring area*5		30×120mm (1 to 120mm)
Scanning rate		3200 scans/s
Laser wavelength		650nm (Visible)
Laser scanning speed		904m/s
Operating environment	Temperature	0 to 40°C
	Humidity	RH 35 to 85% (no condensation)
Protection level		IP64*6

*1: Determined by the value of ±2σ (σ: standard deviation) when measuring ø120mm at the interval of 0.32 sec. (average 1024 times).
*2: Center of the measuring range for cylindrical workpieces outside diameter.
*3: ΔD=Difference in diameter between the master gage and workpiece (Unit: mm)
*4: An error of the outside diameter due to variation in workpiece position either in the optical axis direction or in the scanning direction.
*5: The area given by [optical axis direction]×[scanning direction].
*6: The protection level provided for the interior. If the workpiece or glass of the measuring unit window is soiled by water or dust, the unit may malfunction.

DIMENSIONS

Unit: mm

LSM-512S

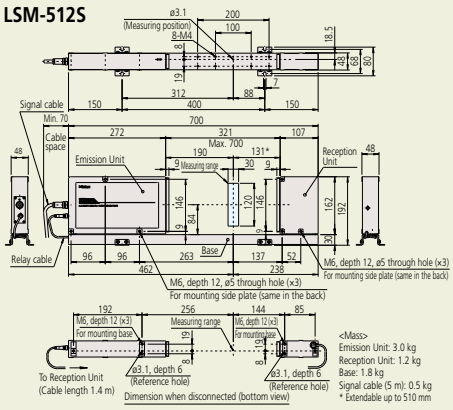

LSM-500S

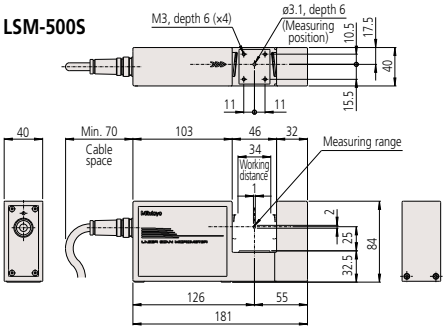

LSM-503S

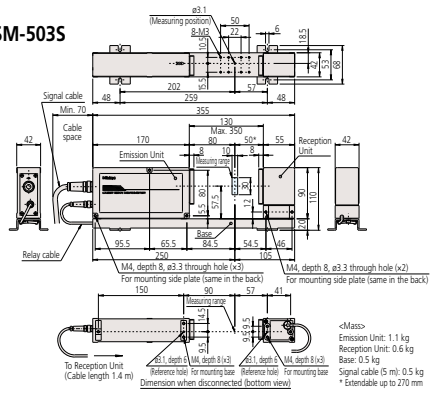

LSM-501S

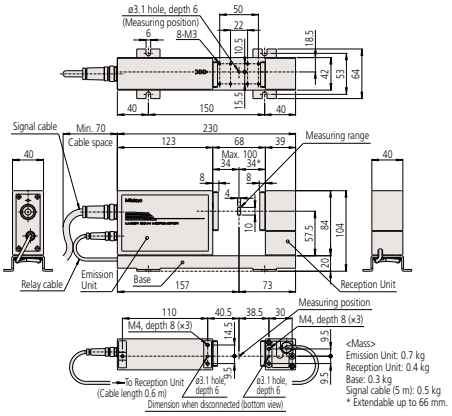

LSM-506S

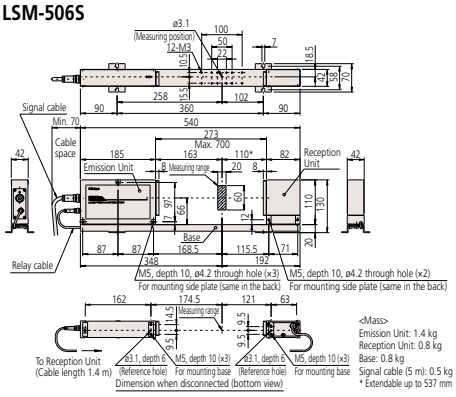

G

Mitutoyo

Laser Scan Micrometer

LSM-6902H Measuring Unit and 6900 Display SERIES 544 — 0.1 mm to 25 mm High Accuracy

- Demonstrates the best repeatability available in the 25 mm class.
- Thanks to excellent linearity, an accuracy of ±0.5 µm over the entire measuring range and a higher accuracy of ±(0.3+0.1ΔD) µm over a narrow range are guaranteed.
- The ultra-precise scanning motor enables the highest measurement accuracy to be realized.
- The optimal solution for measuring the outside diameter of pin gages or plug gages.

LSM-6902H

SPECIFICATIONS

Model		LSM-6902H
Set Order No.		**544-499-1A**
Measuring unit		
Type		inch/mm
Applicable standards		IEC, FDA
Measuring range		0.1 to 25 mm (0.004 to 1.0 in)
Resolution		0.01 to 10 µm (selectable) (0.000001 to 0.0005 in)
Repeatability*1	Whole range	±0.045 µm (±0.0000018 in) (ø25 mm)
	Narrow range	±0.03 µm (±0.0000012 in) (ø10 mm)
Linearity*2 (20 °C)	Whole range	±0.5 µm (±0.000020 in)
	Narrow range	±(0.3+0.1ΔD) µm ±(0.000012+0.01ΔD) inch*5
Positional error*3		±0.5 µm (±0.000020 in)
Measuring region*4		±1.5 mm×25 mm (±0.006×1.0 in)
Scanning rate		3200 scans/s
Laser wavelength		650 nm (Visible)
Laser scanning speed		226 m/s
Operating environment	Temperature	0 to 40 °C
	Humidity	RH 35 to 85% (non-condensing)

*1 ±2σ values (σ being the standard deviation) for when ø25 mm and ø10 mm samples are measured for 1.28 seconds (2048 scans on average, 2 samples).
*2 The value at the center of the measuring range.
*3 An error in outside diameter measurement due to variation in workpiece position either in the optical axis direction or in the scanning direction.
*4 The region defined by [optical axis depth]×[scanning width].
*5 ΔD=Difference in diameter between the master gage and workpiece (Unit: mm).

Display unit	
Display	16-digit plus 11-digit fluorescent display, and guide message LED
Segment	1 to 7 (1 to 3, transparent) or 1 to 255 edges
Averaging times	Arithmetic average: 2 to 2048 scans. Moving average: 32 to 2048 scans.
Judgment	Selection from "target value + tolerance", "lower tolerance + upper tolerance", or "7 classes multilimit tolerance zone".
Measurement mode	Standby, Single measurement, Continuous measurement
External dimensions	335 (W) ×134 (H) ×250 (D) mm
Power supply	100 to 240 VAC ±10% 30 W 50/60 Hz
Standard I/F	RS-232C, Analog I/O
Optional I/F	Digimatic code output unit (2-ch), 2nd I/O analog I/F, BCD I/F
Operating environment	0 to 40 °C, RH 35 to 85% (non-condensing)
Others	Nominal setting, sample setting, suppression of unnecessary digits, transparent object measurement, automatic measurement in edge mode, output timer, abnormal data elimination, SHL change, group judgment, simultaneous measurement, statistical processing, mastering, buzzer function, automatic workpiece detection (dimension/position), zero-set/offset Note: In the case of dual measuring-unit connection, extra-fine line measurement and some of the communication commands are not available

Optional Accessories

- Standard calibration gage set (ø1.0, ø25.0): **02AGD180**
- Workstage: **02AGD270**
- Adjustable workstage: **02AGD280**
- Digimatic code output unit (2-ch): **02AGC840**
- 2nd I/O analog interface unit: **02AGC880**
- BCD interface unit: **02AGC910**
- Printer & cable set (120V AC C-type plug): **02AGD600B**
- Printing paper TP411-28CL / 1Pack = 10pc: **223663**
- Foot switch: **937179T**

DIMENSIONS

Unit: mm

Measuring Unit

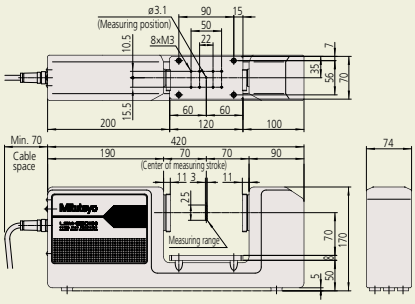

Display unit

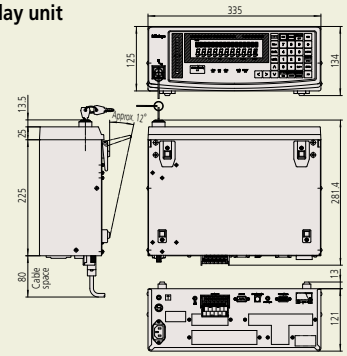

Find a Distributor

Laser Scan Micrometer

LSM-6200 Display Unit
SERIES 544 — Multi-function Type

- Multi-function display for LSM500S series.
- Capable of statistical analysis such as: average, maximum value, minimum value, range (max. to min.).
- Segment measurement (7 points) or edge measurement (1 to 255 edges) can be selected.
- A function to eliminate abnormal values is standard.
- 100 tolerance values, preset values, or settings can be stored.
- Multiple communication formats are available

DIMENSIONS

Unit: mm

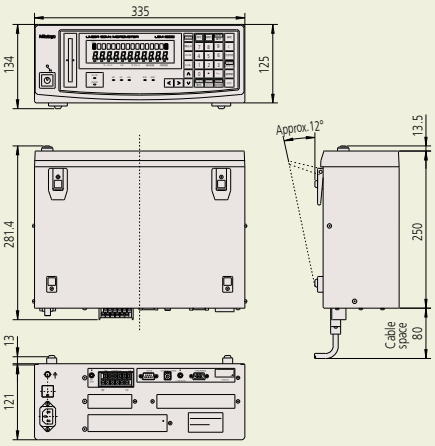

Optional Accessories

- Serial cable (RS-232C null): **12AAA807**
- Footswitch: **937179T**
- Extension Signal Cables: **02AGN780A, B, C, D**
- Digimatic output card: **02AGC840**
- Dual Input Card: **02AGP150**
- BCD output: **02AGC910**
- 2nd analog output card: **02AGC880**
- Printer: **02AGD600B**

SPECIFICATIONS

Model	**LSM-6200**
Order No.	**544-072A**
Type	inch/mm
Display	16-digit dot matrix (upper) and 11-digit 7-segment (lower)
Segment	1 to 7 (1 to 3, transparent) or 1 to 255 edges*1
Averaging times	Arithmetic average: per 2 to 2048/Moving average: per 32 to 2048 (Arithmetic average is per 16 to 2048 when using **544-532**)
Judgment	Selection from "target value+tolerance", "lower tolerance + upper tolerance", or "7 classes multi-limit tolerance zone".
Measurement mode	Standby, Single measurement, Continuous measurement
Statistical analysis	Maximum, Minimum, Average, Dispersion, σ (S.D)
Size	335 (W) ×134 (H) ×250 (D) mm
Power supply	100 to 240 V AC ±10%, 45 W, 50/60 Hz
Standard I/F	RS-232C, Analog I/O
Optional I/F	Digimatic code output unit (2-ch), 2nd I/O analog I/F, BCD I/F
Operating environment	0 to +40 °C, RH 35 to 85% (non-condensing)
Other functions	Nominal setting, sample setting, selection of unnecessary digits, transparent object measurement*2, measurement of odd fluted parts, automatic measurement in edge mode, output timer, abnormal data elimination, SHL change, group judgment, simultaneous measurement, statistical processing, mastering, buzzer function, automatic workpiece detection (dimension/position)*1, zero-set/offset, dual measurement (optional)

G

LSM-5200 Display Unit
SERIES 544 — Panel-mount Type

- A compact controller which could be used for multi-unit system configurations.
- A panel-mount type display unit designed for the **LSM500S** Series.
- Analog I/O and RS-232C is standard.

DIMENSIONS

Unit: mm

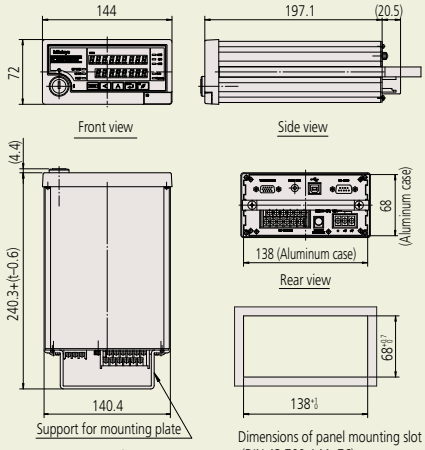

t = panel thickness

Dimensions of panel mounting slot (DIN 43 700-144x76)
Panel thickness: 1.6 ≤ t ≤ 6 (mm)
Mass: 1.4 kg

SPECIFICATIONS

Model	**LSM-5200**
Order No.	**544-047** (power supply not included)
Display	9-digit (upper) and 8-digit (lower) 7-segment
Segment	1 to 7 (1 to 3, transparent) or 1 to 255 edges
Averaging method	Arithmetic average: from 4 to 2048; Moving average: from 32 to 2048 (Arithmetic average is from 16 to 2048 when using **LSM-500S**.)
Judgment	Selecting from "target value±tolerance value" or "lower limit/upper limit".
Measurement mode	Standby, Single measurement, Continuous measurement
Statistical analysis	Calculation result is output via USB or RS-232C.
External dimensions	144 (W) ×72 (H) ×197.1 (D) mm
Power supply	24 V DC±10%, 1.3 A or more
Standard I/F	USB2.0, RS-232C, I/O analog
Operating temperature (humidity) ranges	0 to 40 °C, RH 35 to 85% (non-condensing)
Storage temperature (humidity) ranges	−20 to 70 °C, RH 35 to 85% (non-condensing)
Other functions	Measurement of odd fluted parts, simultaneous measurement, nominal setting, sample setting, selection of unnecessary digits, transparent object measurement Automatic workpiece detection (dimension/position detected)*1, abnormal data elimination, mastering, statistical processing (when using USB, RS-232C), output timer, automatic measurement in edge mode, presetting Note that every function is limited in its combination possibilities. See the user manual for details.
Mass	1.4 kg

Note 1: For USB communication with a PC, a dedicated device driver is required. For details, contact your nearest M³ Solution Center.

Mitutoyo

Laser Scan Micrometer

Optional Accessories
SERIES 544 — Laser Scan Micrometer (Measuring Unit)

Standard calibration gage set

- Standard gage set suitable for calibration of Laser Scan Micrometers.
- Nominal gage diameters (1 to 160 mm) are as given in Specifications.

SPECIFICATIONS

For calibrating models		LSM-6902H	LSM-503S	LSM-506S	LSM-512S
Set No.		02AGD180	02AGD130	02AGD140	02AGD150
Configuration (Order No.)	Stand	02AGD181	02AGD131	02AGD141	02AGD151
	Gages	ø1: 02AGD920 ø25: 02AGD963	ø1: 02AGD920 ø30: 02AGD961	ø1: 02AGD920 ø60: 02AGD962	ø20: 229730 ø120: 234072
	Carrying case	02AGD190	02AGD980	02AGD980	02AGD990

Workstage

- Easy set-up and height adjustment enables high-precision measurement.

SPECIFICATIONS

Model	LSM-501S LSM-503S LSM-6902H
Order No.	02AGD270

Adjustable workstage

- Vertical/horizontal slide mechanism enables easy measurement of various workpiece diameters.
- Suitable for quality control of high-precision shafts, rollers, pin gages and similar.

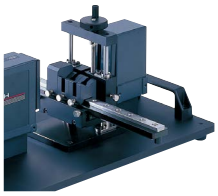

Measurement Examples

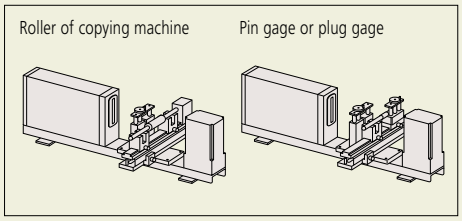

Basic configuration

Basic set	Order No.	Model	Standard Accessories	Measuring range (mm)	Horizontal stroke (mm)	Vertical stroke (mm)
1) Main unit 2) V-block 3) Stop	02AGD280	LSM-6902H	V-block (02AGD420), 2 pcs. Stopper (02AGD430), 1 pc.	0.1 - 25	130	47
	02AGD490	LSM-503S		0.3 - 30	200	35
	02AGD520	LSM-506S*	V-block A (02AGD550), 2 pcs.	1 - 60	300	45

* The stop is not included in the basic set for these models.
Note: Optional part for the adjustable workstage, such as center support, adjustable V-block (up/down) etc., are available.

Guide pulley

- Used for supporting measurement of outside diameter of fine wire-like materials such as magnetic wire or fiber.

SPECIFICATIONS

Model	LSM-500S	LSM-501S
Order No.	02AGD200	02AGD210

Note 1: Each measurement range is as follows:
LSM-500S: ø5 µm to ø1.6 mm
LSM-501S: ø50 µm to ø2 mm

Note 2: For calibration, the calibration gage set for **LSM-500S** (**02AGD110**) is required.

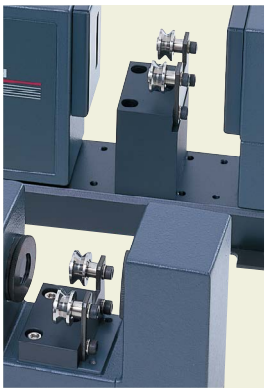

Optional Accessories
SERIES 544 — Laser Scan Micrometer (Display Unit)

Digimatic code output unit

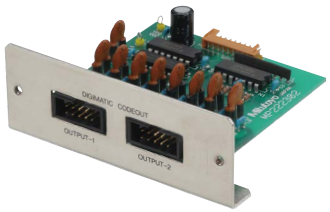

- 2-channel Digimatic code output
- In simultaneous measurement, measurement data are output as follows:
  Program No. 0 to No. 4 in OUTPUT-1
  Program No. 5 to No. 9 in OUTPUT-2 (10 programs operated)
- 10 pin MIL type connector.
- Output cable is not supplied.
  Connecting cable (optional) 1 m (936937)
- Available for **LSM-6200** (**544-071**, **544-072**) and **LSM-6902H** (**544-498-1**, **544-499-1**).

Note 1: Output is 6 digits of measurement data.
Note 2: Displaying 6th and 7th digit after the decimal point is not supported.

SPECIFICATIONS

Order No.	02AGC840

Dual connection unit

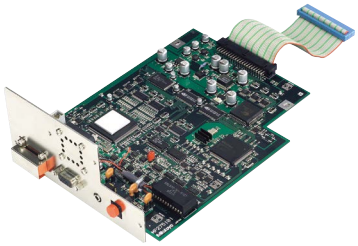

- Enables second unit connection to **LSM-6200** (**544-071**, **544-072**). (both units must be the same model)

  Note: Cannot be used for **LSM-6902H** (**544-498-1**, **544-499-1**).
- Depending on the layout of the two measuring units, large-diameter measurement, XY measurement, and parallel measurement are possible.
- Both of the measuring units and display units can be simultaneously operated.

SPECIFICATIONS

Order No.	02AGP150

2nd I/O analog I/F

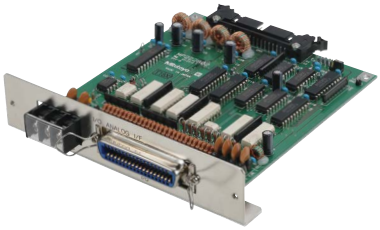

- I/O, analog output.
- Simultaneous measurement is supported by two pairs of GO/NG judgment outputs.
- Available for **LSM-6200** (**544-071**, **544-072**) and **LSM-6902H** (**544-498-1**, **544-499-1**).

SPECIFICATIONS

Order No.	02AGC880
Standard Accessories	Connector (DDK) **57-30360** (**214188**)

Cable for BCD and 2nd I/O simultaneous mount

- Both BCD (**02AGC910)** and 2nd I/O analog I/F (**02AGC880**) can be mounted on **LSM-6200** (**544-071**, **544-072**) and **LSM-6902H** (**544-498-1**, **544-499-1**) using this cable.

Note: If using this cable, the dual connection unit (**02AGP150**) cannot be used.

SPECIFICATIONS

Order No.	02AGE060

DIMENSIONS

Unit: mm

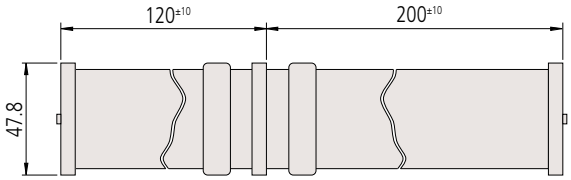

XY Measurement

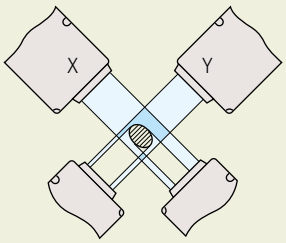

(X–Y): runout
(X+Y)/2: average
Note: XY requires 10 mm-interval.

Parallel Measurement

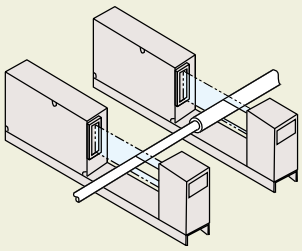

Got Questions?

G

Laser Scan Micrometer

Optional Accessories
SERIES 544 — Laser Scan Micrometer (Measuring Unit)

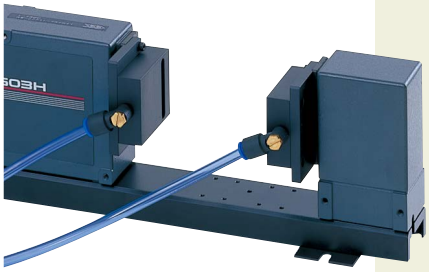

Air Shield

- Air blows from the air outlet installed on the laser section to clear dust adhering to the laser window.

SPECIFICATIONS

Air supply unit	Air shield	Applicable models
957608	02AGD220	LSM-500S (544-532)
	02AGD230	LSM-501S (544-534)
	02AGD240	LSM-503S (544-536)
	02AGD250	LSM-506S (544-538)
	02AGD260	LSM-512S (544-540)

Note: Air shield is supplied with 5 m air tube (Outside Diameter: 6 mm).

Extension signal cable/Extension relay cable

- Extension signal cables are necessary when the measuring unit and display unit are separated in operation; Extension relay cables are necessary when the optical section is separated in operation.

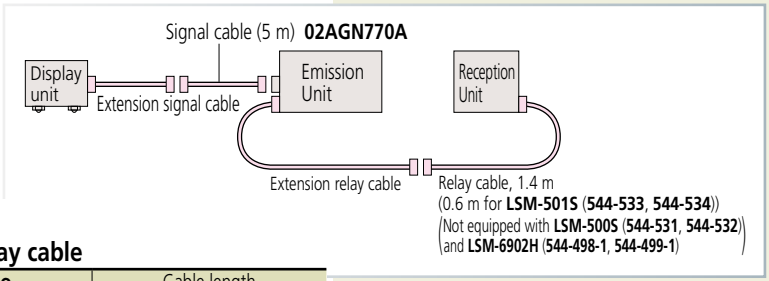

SPECIFICATIONS

Extension signal cable

Order No.	Cable length
02AGN780A	5 m
02AGN780B	10 m
02AGN780C	15 m
02AGN780D	20 m

Extension relay cable

Order No.	Cable length
02AGC150A	1 m
02AGC150B	3 m
02AGC150C	5 m

Note 1: For **544-532**, **544-534**, the overall length of the signal cable and the extension signal cable is 20 m at a maximum.
Note 2: For **544-536**, **544-538**, **544-540**, **544-542** the overall length of the signal cable and the extension signal cable is 30 m at a maximum.
Note 3: The length of the relay extension cable is 5 m at a maximum.
Note 4: The maximum extension length of the signal cable and relay cable is 32 m in total.
Note 5: Cannot be used with **544-499-1A**.

G

Optional Accessories
SERIES 544 — Laser Scan Micrometer (Display Unit)

Foot switch

- For **LSM-6200** (**544-071**, **544-072**), **LSM-6902H** (**544-498-1**, **544-499-1**) and **LSM-9506** (**544-116**).

937179T

Optional Accessories
Interface for LSM6200, 6902H

BCD Interface

- Outputs measurement data in BCD output (7-digit) or HEX output.
- Data logic can be switched.
- Isolated I/O circuitry
- Available for **LSM-6200** (**544-072**) and **LSM-6902H** (**544-499-1**).

SPECIFICATIONS

Order No.	02AGC910
Standard Accessories	Connector (DDK) **57-30360** (**214188**)

Talk to Sales

Compatibility

Your Laser Scan Micrometer has been adjusted together with the ID Unit, which is supplied with the measuring unit. The ID Unit, which has the same code number and the same serial number as the measuring unit, must be installed in the display unit. This means that if the ID Unit is replaced the measuring unit can be connected to another corresponding display unit.

The workpiece and measuring conditions

Depending on whether the laser is visible or invisible, the workpiece shape, and the surface roughness, measurement errors may result. If this is the case, perform calibration with a master workpiece which has dimensions, shape, and surface roughness similar to the actual workpiece to be measured.
If measurement values show a large degree of dispersion due to the measuring conditions, increase the number of scans for averaging to improve the measurement accuracy.

Electrical interference

To avoid operational errors, do not route the signal cable and relay cable of the Laser Scan Micrometer alongside a high voltage line or other cables capable of inducing noise current in nearby conductors. Ground all appropriate units and cable shields.

Connection to a computer

If the Laser Scan Micrometer is to be connected to an external personal computer via the RS-232C interface, ensure that the cable connections conform to the specification.

Laser safety

Mitutoyo Laser Scan Micrometers use a low-power visible laser for measurement. The laser is a CLASS 2 EN/IEC60825-1 device.
Warning and explanation labels, as shown below, are attached to the Laser Scan Micrometers as is appropriate.

Re-assembly after removal from the base

Observe the following limits when re-assembling the emission unit and reception unit to minimize measurement errors due to misalignment of the laser's optical axis with the reception unit.

• Alignment within the horizontal plane

a. Parallel deviation between reference lines C and D: X (in the transverse direction)

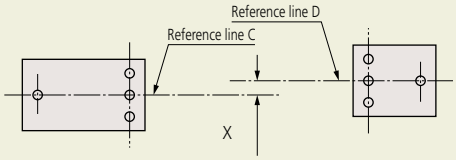

b. Angle between reference lines C and D: θx (angle)

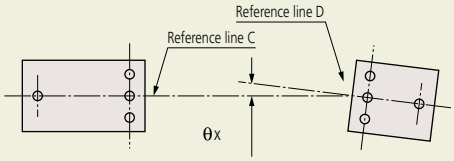

• Alignment within the vertical plane

c. Parallel deviation between reference planes A and B: Y (in height)

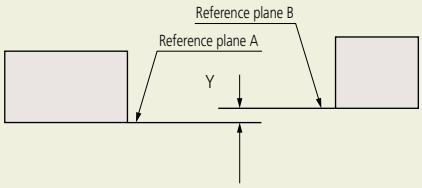

d. Angle between reference planes A and B: θy (angle)

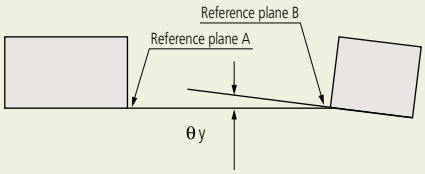

• Allowable limits of optical axis misalignment

Model	Distance between Emission Unit and Reception Unit	X and Y	θx and θy
LSM-501S	68 mm (2.68 in) or less	within 0.5 mm (0.02 in)	within 0.4° (7 mrad)
	100 mm (3.94 in) or less	within 0.5 mm (0.02 in)	within 0.3° (5.2 mrad)
LSM-503S	130 mm (5.12 in) or less	within 1 mm (0.04 in)	within 0.4° (7 mrad)
	350 mm (13.78 in) or less	within 1 mm (0.04 in)	within 0.16° (2.8 mrad)
LSM-506S	273 mm (10.75 in) or less	within 1 mm (0.04 in)	within 0.2° (3.5 mrad)
	700 mm (27.56 in) or less	within 1 mm (0.04 in)	within 0.08° (1.4 mrad)
LSM-512S	321 mm (12.64 in) or less	within 1 mm (0.04 in)	within 0.18° (3.1 mrad)
	700 mm (27.56 in) or less	within 1 mm (0.04 in)	within 0.08° (1.4 mrad)
LSM-516S	800 mm (31.50 in) or less	within 1 mm (0.04 in)	within 0.09° (1.6 mrad)

Featured Products

DRO Retrofit Packages

Refer to page H-9 for details.

Attached Type Scale Unit for ABSOLUTE Systems

ABS AT1300 Series

Refer to page H-17 for details.

Attached Type Scale Unit for ABSOLUTE Systems

ABS AT1100 Series

Refer to page H-18 for details.

H

Digimatic Scale Units
Linear Scales

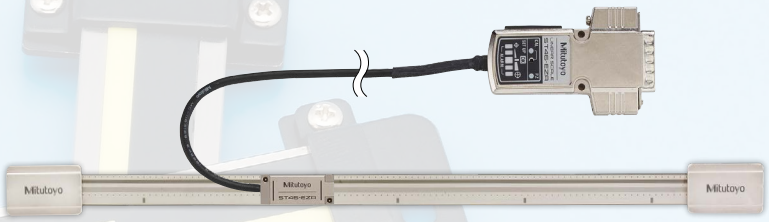

Exposed, Compact Linear Scales & Multiple Mounting Options

ST46-EZA Series

Refer to page H-20 for details.

INDEX

ABSOLUTE Digimatic Scale Units	
SD Horizontal and Vertical	H-3,4,5,6
Quill Kit with ABSOLUTE Encoder	H-7
Linear Scales	
Counter (KA-200)	H-8
Digital Readout / DRO Packages 2-Axis / 3-Axis Travels	H-9,10
Linear Scale System Diagram	H-11,12
AT103 Standard Spar Type	H-13
PSU-200 Pulse Signal Interface Unit	H-13
AT113 Slim Spar Type	H-14
AT211-A, AT211-B Slim Spar, High Speed	H-15
ABS AT715 Slim Spar Type	H-16
ABS AT1300 High Accuracy, Robust Type	H-17
ABS AT1100 Coolant/Dust-proof Type	H-18
ST36 High Accuracy/Resolution Type	H-19
ST46-EZA Compact, Glass/Metal-tape Types	H-20
ABS ST700 Contamination Resistant, 6 m max.	H-21
ABS ST1300 Ultra-high Resolution, 12 m max.	H-22
Quick Guide to Precision Measuring Instruments	H-23,24

IP66 IP67

IP Codes

These are codes that indicate the degree of protection provided (by an enclosure) for the electrical function of a product against the ingress of foreign bodies, dust and water as defined in IEC standards (IEC 60529: 2001) and JIS C 0920: 2003.

PROPRIETARY INSPECTION CERTIFICATE

Measuring Instruments Shipped with Inspection Certificate

Mitutoyo guarantees product quality as a leading precision measuring instrument manufacturer and ships measuring instruments with an inspection certificate that includes inspection data so that customers can use them with confidence.

ABSOLUTE™

ABSOLUTE Linear Encoder

Mitutoyo developed the unique ABSOLUTE method to retain position information after the power is turned off.
The origin is set once - thereafter the live position is displayed when the power is turned on.

Mitutoyo

ABSOLUTE Digimatic Scale Units

IP66 ABSOLUTE™

Applicable models: **SD-G**

SD ABSOLUTE Digimatic Scale Units SERIES 572

Horizontal single-function type (Water-proof type)
572-602 SD-20G

Horizontal single-function type
572-202-30 SD-20AX
572-203-10 SD-30D

Horizontal multi-function type
572-461 SD-15E

Vertical single-function type
572-303-10 SDV-30D

Vertical multi-function type
572-561 SDV-15E

- **SD** series facilitates mounting on jigs, tools, and small machine tools to enable accurate positioning.
- Built-in ABSOLUTE scale including the ABS point does not require a zero-set every time the power is turned on.
  In addition, reliability has improved thanks to elimination of overspeed errors.
- Horizontal or vertical display according to the scale mounting direction.
- The dust resistance and the environmental resistance of the display has improved. The **SD-G** series offers dust/water protection level IP66.
- Long battery life.
- **EC** counters are available as external display units.
- Equipped with an output port to transfer measurement data, allowing implementation in control systems and gaging systems.

Functions

- ABS (ABSOLUTE) measurement function
- INC (Incremental) measurement function
- Zero-setting function
- Presetting function (2 preset values can be set. Not available for SD-G, SD-AX, SD-D, SDV-D)
- Double reading function (Available only for SD-F or SDV-F)
- Direction switch function
  (Available only for SD-E, SDV-E)
- Hold function*
- Measurement value composition error alarm
- Low battery alarm
- Output function

* To activate the hold function when using SD-AX, SD-D or SDV-D models, an optional hold unit is required. Simultaneous activation with the output function is not available.

Note: These units use 1.5 V silver oxide cells for the power supply. Therefore, when the units are directly fixed to the frame of a machine tool that requires a high voltage, malfunctions such as display digit fluctuations and errors may occur. Countermeasure examples are described in the user manuals provided.

Typical Applications

Machine table position

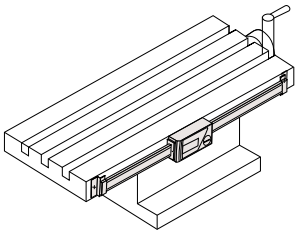

Drilling machine stroke position

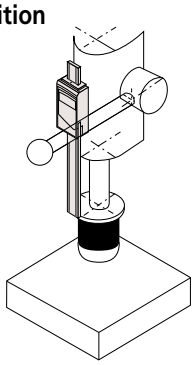

Focus setting on optical instruments

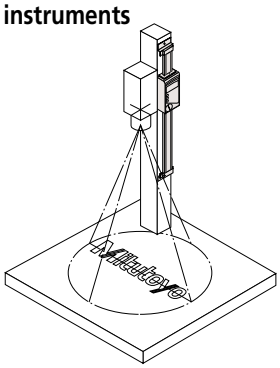

Special Applications

Please contact Mitutoyo for special applications.

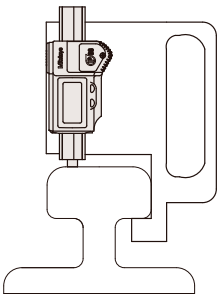

As a measurement jig for outdoor use (SD-G)

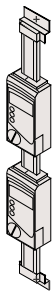

Detector head mechanism

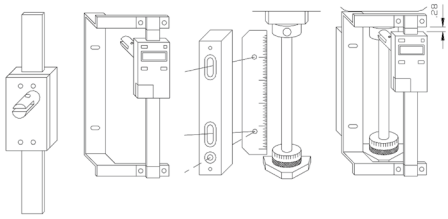

The Mitutoyo Quill Kit mounted on a vertical mill

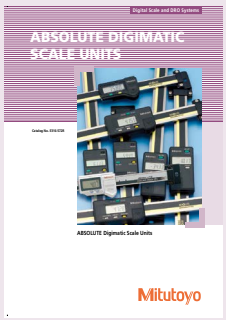

Refer to the ABSOLUTE Digimatic Scale Units Brochure (**E316-572R**) for more details.

ABSOLUTE Digimatic Scale Units

System Diagram

[Scale units] **[Display units]**

Single-function Type with High Dust / Water Resistance

SD-G (Horizontal)

*2

EC Counter*3

Refer to page G-11 for details.

→ Tolerance judgment output*1

Single-function type

SD-AX (Horizontal)

Note 1: **SD-30D** for the measuring range of 300 mm.

SDV-D (Vertical)

Multi-function type

SD-E (Horizontal)

SDV-E (Vertical)

Multi-function type

SD-F (Horizontal)

SDV-F (Vertical)

*3

Digimatic mini-processor
DP-1VA LOGGER
264-506A

Palm-sized printer for printing and statistical analysis

*3

4-Input Interface Unit
MIG-4USB
64AAB639

Interface unit for the **RS-232C** conversion and output **RS-232C** output

→ USB keyboard RS-232C output

USB Input Tool Direct
USB-ITN-D
06AFM380D

An interface that easily transfers data to widely used software such as Excel. Slim, with integrated cable.

→ USB keyboard signal conversion

*3

Input Tool (USB keyboard signal conversion model)
IT-020U
264-020

USB Interface unit that converts and transfers data into spreadsheets

→ USB keyboard signal conversion

Note 2: May also be connected to an RS-232C conversion type (**IT-007R**) input tool.

USB Input Tool Direct
USB-ITN-A **06AFM380A**
USB-ITN-C **06AFM380C**
USB-ITN-F **06AFM380F**

→ USB keyboard signal conversion

Measurement Data Wireless Communication System
U-WAVE
The data output from the **SD** Series can be sent to the computer by wireless communication without using the **EC** counter. Refer to pages A-9 to A-14 for details.

→ USB keyboard signal conversion

Connecting cable with the water-proof type output switch*2 — 1 m: **05CZA624**, 2 m: **05CZA625**

Connecting cable with the output switch — 1 m: **959149**, 2 m: **959150**

Connecting cable with the output switch

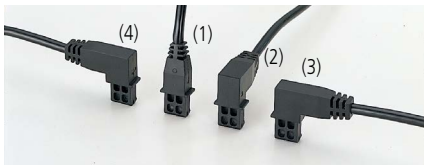

(1) 1 m: **905338** 2 m: **905409**
(2) 1 m: **905689** 2 m: **905690**
(3) 1 m: **905691** 2 m: **905692**
(4) 1 m: **905693** 2 m: **905694**

Connecting cable — 1 m: **936937**, 2 m: **965014**

*1 Select the tolerance judgment output or Digimatic output when setting the parameters.
*2 Connecting cable with the water-proof type output switch can be used only for **SD-G** or Water-proof Digital Caliper equipped with the external output function.
*3 Connecting of SD series and **DP-1VA LOGGER/MIG-8USB, MIG-4USB/IT-020U** is also available without passing through the **EC** counter. In this case, connect these units and **SD** series with the cables used for connection with the **EC** counter.

ABSOLUTE Digimatic Scale Units

ABSOLUTE Digimatic Scale Units
SERIES 572
SPECIFICATIONS

Type	Unit spec.	Order No.	Model	Range	Resolution	Accuracy	Repeatability	Response speed*2	Battery life
Horizontal single-function type (Water-proof type)	Inch/Metric	572-613	SD-4" /10G	4 in/100 mm	0.0005 in/0.01 mm	0.001 in/0.03 mm	0.0005 in/0.01 mm	Unlimited	Approx. 13,000 hours
		572-614	SD-6" /15G	6 in/150 mm					
		572-615	SD-8" /20G	8 in/200 mm					
	Metric	572-600	SD-10G	100 mm	0.01 mm	0.03 mm	0.01 mm		
		572-601	SD-15G	150 mm					
		572-602	SD-20G	200 mm					
Horizontal single-function type	Inch/Metric	572-210-30	SD-4" AX	4 in/100 mm	0.0005 in/0.01 mm	0.001 in/0.03 mm	0.0005 in/0.01 mm		Approx. 18,000 hours
		572-211-30	SD-6" AX	6 in/150 mm					
		572-212-30	SD-8" AX	8 in/200 mm					
		572-213-10	SD-12" D	12 in/300 mm		0.002 in/0.04 mm			Approx. 20,000 hours
	Metric	572-200-30	SD-10AX	100 mm	0.01 mm	0.03 mm	0.01 mm		Approx. 18,000 hours
		572-201-30	SD-15AX	150 mm					
		572-202-30	SD-20AX	200 mm					
		572-203-10	SD-30D	300 mm		0.04 mm			Approx. 20,000 hours
Horizontal multi-function type	Inch/Metric	572-470	SD-4" E	4 in/100 mm	0.0005 in/0.01 mm	0.001 in/0.03 mm	0.0005 in/0.01 mm		Approx. 5,000 hours
		572-471	SD-6" E	6 in/150 mm					
		572-472	SD-8" E	8 in/200 mm					
		572-473	SD-12" E	12 in/300 mm		0.002 in/0.04 mm			
		572-474	SD-18" E	18 in/450 mm					
		572-475	SD-24" E	24 in/600 mm		0.002 in/0.05 mm			
		572-476	SD-32" E	32 in/800 mm		0.0025 in/0.06 mm			
		572-477	SD-40" E	40 in/1000 mm		0.003 in/0.07 mm			
	Metric	572-460	SD-10E	100 mm	0.01 mm	0.03 mm	0.01 mm		
		572-461	SD-15E	150 mm					
		572-462	SD-20E	200 mm					
		572-463	SD-30E	300 mm		0.04 mm			
		572-464	SD-45E	450 mm					
		572-465	SD-60E	600 mm		0.05 mm			
		572-466	SD-80E	800 mm		0.06 mm			
		572-467	SD-100E	1000 mm		0.07 mm			
Horizontal multi-function type (equipped with double reading function)	Inch/Metric	572-490-10*1	SD-4" F	4 in/100 mm	0.0005 in/0.01 mm	0.001 in/0.03 mm	0.0005 in/0.01 mm (Radius indication, not diameter)		Approx. 5,000 hours
		572-491-10*1	SD-6" F	6 in/150 mm					
		572-492-10*1	SD-8" F	8 in/200 mm					
		572-493-10*1	SD-12" F	12 in/300 mm		0.002 in/0.04 mm			
		572-494-10*1	SD-18" F	18 in/450 mm					
		572-495-10*1	SD-24" F	24 in/600 mm		0.002 in/0.05 mm			
		572-496-10*1	SD-32" F	32 in/800 mm		0.0025 in/0.06 mm			
		572-497-10*1	SD-40" F	40 in/1000 mm		0.003 in/0.07 mm			
	Metric	572-480-10*1	SD-10F	100 mm	0.01 mm	0.03 mm	0.01 mm (Radius indication, not diameter)		
		572-481-10*1	SD-15F	150 mm					
		572-482-10*1	SD-20F	200 mm					
		572-483-10*1	SD-30F	300 mm		0.04 mm			
		572-484-10*1	SD-45F	450 mm					
		572-485-10*1	SD-60F	600 mm		0.05 mm			
		572-486-10*1	SD-80F	800 mm		0.06 mm			
		572-487-10*1	SD-100F	1000 mm		0.07 mm			
Vertical single-function type	Inch/Metric	572-310-10	SD-4" D	4 in/100 mm	0.0005 in/0.01 mm	0.03 mm/0.001 in	0.0005 in/0.01 mm		Approx. 20,000 hours
		572-311-10	SD-6" D	6 in/150 mm					
		572-312-10	SD-8" D	8 in/200 mm					
		572-313-10	SD-12" D	12 in/300 mm		0.04 mm/0.002 in			
	Metric	572-300-10	SDV-10D	100 mm	0.01 mm	0.03 mm	0.01 mm		
		572-301-10	SDV-15D	150 mm					
		572-302-10	SDV-20D	200 mm					
		572-303-10	SDV-30D	300 mm		0.04 mm			
Vertical multi-function type	Inch/Metric	572-570	SDV-4" E	4 in/100 mm	0.0005 in/0.01 mm	0.001 in/0.03 mm	0.0005 in/0.01 mm		Approx. 5,000 hours
		572-571	SDV-6" E	6 in/150 mm					
		572-572	SDV-8" E	8 in/200 mm					
		572-573	SDV-12" E	12 in/300 mm		0.002 in/0.04 mm			
		572-574	SDV-18" E	18 in/450 mm					
		572-575	SDV-24" E	24 in/600 mm		0.002 in/0.05 mm			
		572-576	SDV-32" E	32 in/800 mm		0.0025 in/0.06 mm			
		572-577	SDV-40" E	40 in/1000 mm		0.003 in/0.07 mm			
	Metric	572-560	SDV-10E	100 mm	0.01 mm	0.03 mm	0.01 mm		
		572-561	SDV-15E	150 mm					
		572-562	SDV-20E	200 mm					
		572-563	SDV-30E	300 mm		0.04 mm			
		572-564	SDV-45E	450 mm					
		572-565	SDV-60E	600 mm		0.05 mm			
		572-566	SDV-80E	800 mm		0.06 mm			
		572-567	SDV-100E	1000 mm		0.07 mm			
Vertical multi-function type (equipped with double reading function)	Inch/Metric	572-590-10*1	SDV-4" F	4 in/100 mm	0.0005 in/0.01 mm	0.001 in/0.03 mm	0.0005 in/0.01 mm (Radius indication, not diameter)		Approx. 5,000 hours
		572-591-10*1	SDV-6" F	6 in/150 mm					
		572-592-10*1	SDV-8" F	8 in/200 mm					
		572-593-10*1	SDV-12" F	12 in/300 mm		0.002 in/0.04 mm			
		572-594-10*1	SDV-18" F	18 in/450 mm					
		572-595-10*1	SDV-24" F	24 in/600 mm		0.002 in/0.05 mm			
		572-596-10*1	SDV-32" F	32 in/800 mm		0.0025 in/0.06 mm			
		572-597-10*1	SDV-40" F	40 in/1000 mm		0.003 in/0.07 mm			
	Metric	572-580-10*1	SDV-10F	100 mm	0.01 mm	0.03 mm	0.01 mm (Radius indication, not diameter)		
		572-581-10*1	SDV-15F	150 mm					
		572-582-10*1	SDV-20F	200 mm					
		572-583-10*1	SDV-30F	300 mm		0.04 mm			
		572-584-10*1	SDV-45F	450 mm					
		572-585-10*1	SDV-60F	600 mm		0.05 mm			
		572-586-10*1	SDV-80F	800 mm		0.06 mm			
		572-587-10*1	SDV-100F	1000 mm		0.07 mm			

*1 Available to special order *2 High slider speed does not cause data errors. Position feedback and output data may not be used while the slider is moving.

ABSOLUTE Digimatic Scale Units

DIMENSIONS

Note: the hole dimensions are on the back.

Unit: mm

SD-G

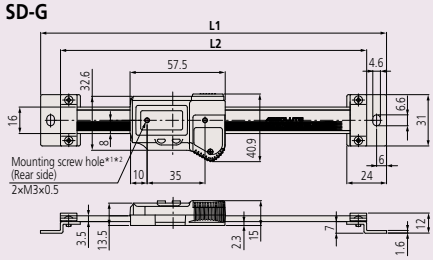

SD-AX

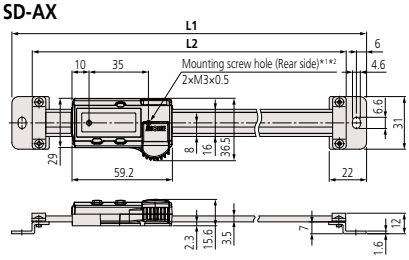

SD-D

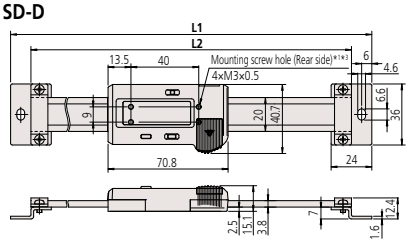

SDV-D

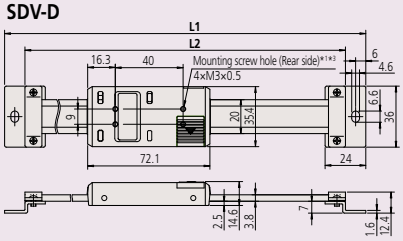

SD-E (to 300 mm)/**SD-F** (to 300 mm)

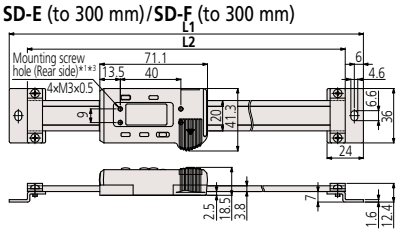

SD-E (450 to 1000 mm)/**SD-F** (450 to 1000 mm)

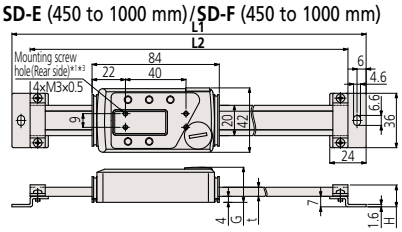

SDV-E (to 300 mm)/**SDV-F** (to 300 mm)

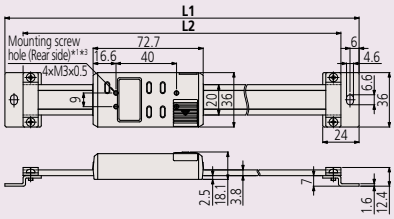

SDV-E (450 to 1000 mm)/**SDV-F** (450 to 1000 mm)

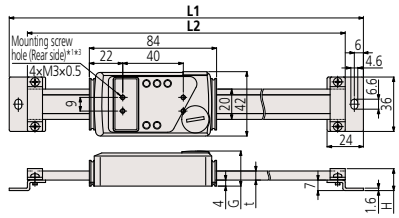

*1 Refer to the dimension table for details of the depth including the screw on the rear of the display.
*2 Mounting screw hole: 2×No.5-40 UNC (Inch type, Inch/Metric switching type)/2×M3×0.5 (Metric type) Screwed depth on the rear side of display unit: under 2 mm
*3 Mounting screw hole: 4×No.5-40 UNC (Inch type, Inch/Metric switching type)/4×M3×0.5 (Metric type) Screwed depth on the rear side of display unit: under 2 mm

SPECIFICATIONS

1inch = 25.4mm

Model	Range (mm)	Dimensions (mm)					Depth including the screw on the rear of the display	Mass (g)
		L1	L2	t	G	H		
SD-G	100	209	185	—	—	—	Less than 2 mm	390
	150	259	235	—	—	—		410
	200	311	287	—	—	—		430
SD-AX	100	209	185	—	—	—		235
	150	259	235	—	—	—		255
	200	311	287	—	—	—		275
SD-30D	300	444	420	—	—	—		370
SD-E SD-F	100	244	220	—	—	—		250
	150	294	270	—	—	—		280
	200	344	320	—	—	—		310
	300	444	420	—	—	—		370
	450	594	570	6	23.2	14.6	Less than 3 mm	760
	600	774	750					900
	800	974	950	10	27.2	18.6		1710
	1000	1174	1150					2040
SDV-D	100	244	220	—	—	—	Less than 2 mm	250
	150	294	270	—	—	—		280
	200	344	320	—	—	—		310
	300	444	420	—	—	—		370
SDV-E SDV-F	100	244	220	—	—	—		250
	150	294	270	—	—	—		280
	200	344	320	—	—	—		310
	300	444	420	—	—	—		370
	450	594	570	6	23.2	14.6	Less than 3 mm	760
	600	774	750					900
	800	974	950	10	27.2	18.6		1710
	1000	1174	1150					2040

Talk to Sales

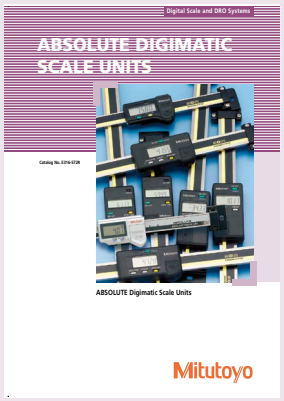

Refer to the ABSOLUTE Digimatic Scale Units Brochure (**E316-572R**) for more details.

H

Quill Kit with ABSOLUTE Encoder

Easy Installation Fits Most Vertical Knee Mills

- Easy-to-read LCD with resolution of .0005"/0.01mm. 0 -5" travel inch/mm
- Push button controls for inch/mm, zero-set and on/off.
- Powered by a single SR-44 battery which lasts about 1 year with normal use.
- SPC Output for data transmission to data processors or a remote display.

SPECIFICATIONS

Order No.	Description
053906B	Digimatic Quill Kit complete with brackets & scale for Bridgeport-type machines.

Optional Accessories

905338: SPC cable (40" / 1m standard)
905409: SPC cable (80" / 2m standard)
264-506A: DP-1VA data processor, 120V AC
02AZD810D: U-Wave-R (wireless receiver)
02AZD730D: U-Wave-T/IP67 type (wireless transmitter)
02AZD790F: U-Wave connecting cable F
02AZE200: U-Wave-T installation brackets kit

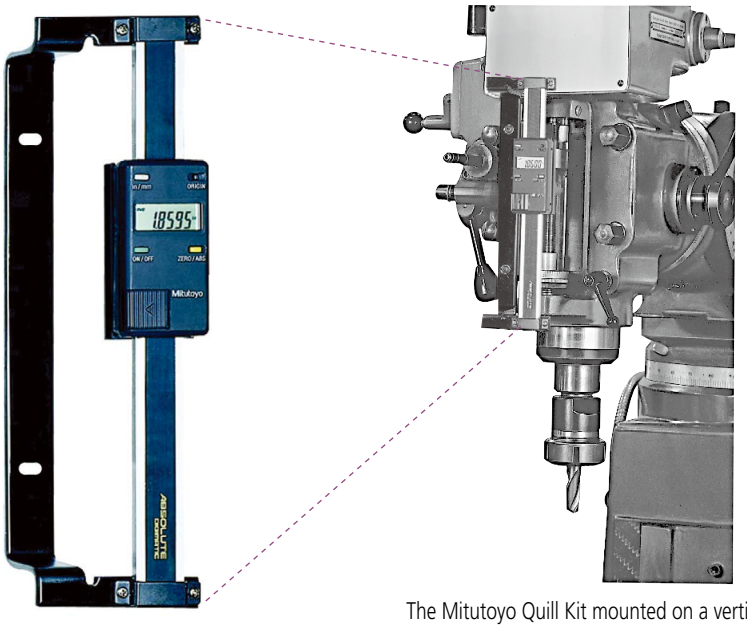

The Mitutoyo Quill Kit mounted on a vertical mill.

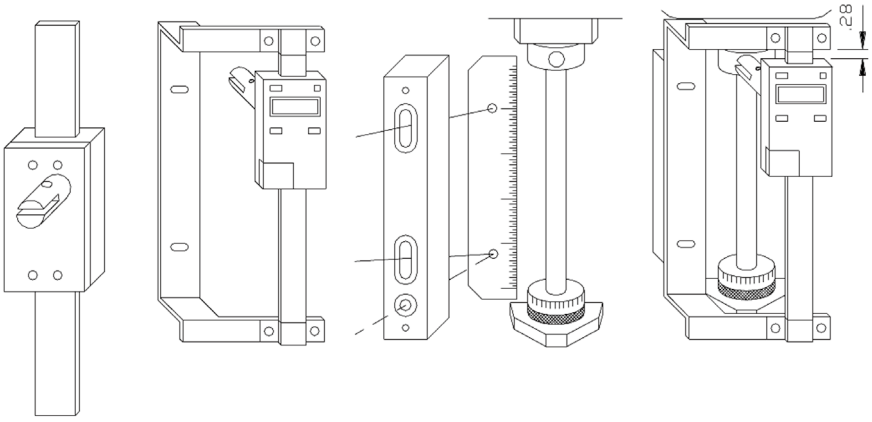

Find a Distributor

KA-200 Counter
SERIES 174 — Standard Type

- High performance, low cost 2 & 3 axis counter.
- ABSOLUTE and incremental modes (10 presets each).
- Non-linear and linear error compensation
- Adjustable high-brightness, high-refresh rate LED displays .
- Calculator function.
- Outputs data into spreadsheets (optional USB card).
- Standard and lathe modes.
- Connects to AT715 and AT100 series Linear Scales.

174-183A
KA-212

174-185A
KA-213

Optional Accessories

06AET993	Code out unit - USB output, RS232C output, Digimatic Input
06ACB393	Adapter for Linear gages with origin
06ACB913	Adapter for Linear gages without origin
06ACB391	Adapter for AT211 Linear Scales
06ACB392	Adapter for ST Series
09CAB231	Adapter for micrometer head
09AAA207	Adapter for previous model 6 pin linear scales
937179T	Foot switch to trigger USB output (06AET993 needed)
64AAB336	Foot switch to trigger RS-232C output (06AET993 needed)
06ACF941	Extension cable for remote load & zero (06AET993 needed)
965004	Foot switch to trigger RS-232C output (for 06ACF941 only)
937328	External load box (06AET993 & 06ACF941 needed)
936553	External zero box (06AET993 & 06ACF941 needed)
09EAA094	Counter cable RS232C for DP-1VA
64AAB519	RS232C output cable 6-ft. (25-9 pin)

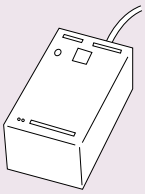

936553

External Zero Box

Zeroes the counter just by pressing the button when using the counter's data output function. For KA-200 Counter (equipped with RS-232C output).

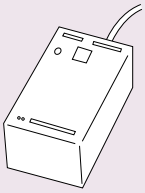

937328

External Load Box

Outputs counter value just by pressing the button when using the counter's data output function. For KA-200 Counter (equipped with RS-232C output).

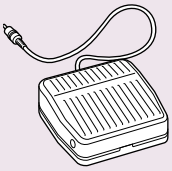

965004

External Load Foot Switch

Connects to the external load/ zero cable (06ACF941) when also using the optional RS-232C card of KA, KS and KC counters. The foot switch can be used to output the displayed data

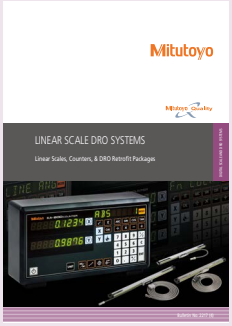

Refer to the Linear Scale DRO Systems Brochure (**No. 2217 (4)**) for more details.

SPECIFICATIONS

Model	KA-212	KA-213
Order No.	**174-183A**	**174-185A**
Number of axes to be displayed	2	3
Resolution	(Changeable according to the parameter) When **AT100** is connected: 0.05 to 0.0001 mm When **AT715** is connected: 0.01 to 0.001 mm	
Display/digit	Main display: 9 digits including sign Sub display: 8 digits	
Power supply voltage	AC100 to 240 V, 50/60 Hz	
Dimensions	300 (W) ×70 (D) ×167 (H) mm	
Output (optional)	RS-232C	
Mass	1.25 kg	1.3 kg

Linear Scales

IP67

Digital Readout / DRO Packages 2-Axis / 3-Axis Travels

- KA-200 counter
- AT715 electromagnetic ABSOLUTE linear scales
- Brackets for linear scales
- Display arm kit

2 Axis Milling Machine System Packages

X Axis Travel (AT715 Slim Electromagnetic)	Y Axis Travel (AT715 Slim Electromagnetic)			
	12" (539-805N)	14" (539-806N)	16" (539-806N)	18" (539-808N)
24" (539-811N)	**64PKA170A**	**64PKA172B**		
30" (539-814N)	**64PKA058D**	**64PKA060C**	**64PKA175B**	
32" (539-815N)		**64PKA169A**	**64PKA176A**	
36" (539-816N)	**64PKA059D**	**64PKA168B**	**64PKA062D**	**64PKA178B**
40" (539-817N)	**64PKA171B**	**64PKA061B**	**64PKA063C**	**64PKA064C**
44" (42") (539-815N)	**64PKA173B**		**64PKA177A**	

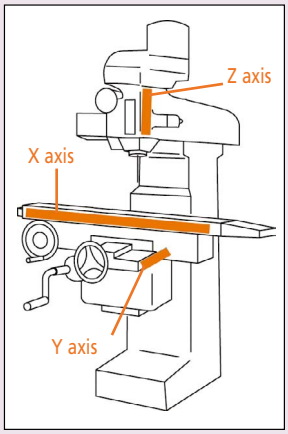

2-Axis Lathe Package

- KA-200 counter
- AT113 and AT715 linear scale combinations (with cables)
- Mounting bracket kit
- Counter tray
- Additional extension cable (2m) included in 60" and 72" packages

Z axis travel (AT715 Slim Electromagnetic)	X Axis Travel (AT113 Slim Glass Scale)					
	6"(539-202-30)	8"(539-203-30)	10"(539-204-30)	12"(539-205-30)	14"(539-206-30)	16"(539-207-30)
28" (539-813N)	**64PKA035B**					
30" (539-814N)	**64PKA036D**					
36" (539-816N)	**64PKA037C**	**64PKA194B**				
40" (539-817N)	**64PKA038B**	**64PKA039B**	**64PKA042C**	**64PKA046C**	**64PKA052C**	
44" (539-818N)		**64PKA040B**	**64PKA043B**	**64PKA047C**	**64PKA053C**	
48" (539-819N)		**64PKA041B**	**64PKA044B**	**64PKA048B**	**64PKA054B**	
52" (539-820N)		**64PKA195A**	**64PKA198A**	**64PKA049C**	**64PKA055C**	
60" (539-822N)		**64PKA196B**	**64PKA045C**	**64PKA050B**	**64PKA056C**	**64PKA057C**
68" (539-824N)		**64PKA220A**		**64PKA200A**		
72" (539-825N)				**64PKA051C**		
80" (539-860N)		**64PKA197B**	**64PKA199B**	**64PKA210B**	**64PKA203B**	
88" (539-861N)			**64PKA223A***	**64PKA201B**		
96" (539-862N)					**64PKA222B**	
120" (539-866N)			**64PKA211A***	**64PKA202A***	**64PKA224B/ 64PKA204A**	**64PKA205A***

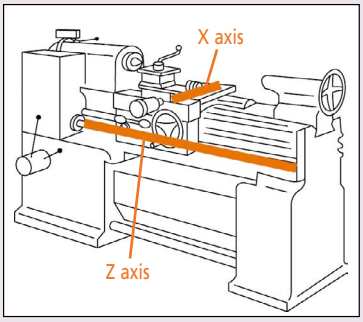

2-Axis, KA Counter Grinder System

- KA-200 counter
- AT113 glass linear scales
- Mounting bracket kit
- Display arm kit

Vertical (AT113 Slim Glass Scale)	Cross Side (AT113 Slim Glass Scale)				
	6" (539-202-30)	8" (539-203-30)	10" (539-204-30)	12" (539-205-30)	14"(539-206-30)
12"(539-205-30)	**64PKA026B**	**64PKA028C**			
14"(539-206-30)	**64PKA027C**	**64PKA029B**			
16"(539-207-30)		**64PKA030D**			
18"(539-208-30)	**64PKA206A**	**64PKA212A**	**64PKA031B**	**64PKA033B**	
20"(539-209-30)				**64PKA034B**	
24"(539-211-30)			**64PKA032C**	**64PKA207**	**64PKA208A**

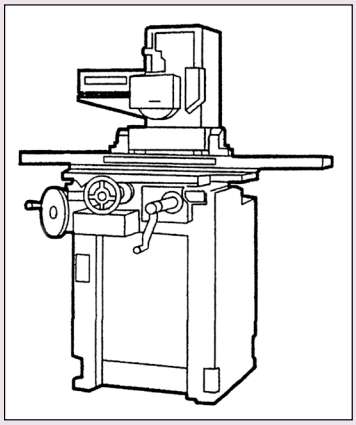

H

Milling Packages
Electro-Magnetic ABSOLUTE DRO Packages for Milling Machines

3 Axis (Quill) - AT715 Slim Electromagnetic for all axes

Order No.	Description
64PKA065C	ABS Scales, 12” x 30” x 6” w/3 axis KA-200 Counter (174-175A)
64PKA066C	ABS Scales, 12” x 36” x 6”,w/3 axis KA-200 Counter (174-175A)
64PKA067C	ABS Scales, 16” x 36” x 6” w/3 axis KA-200 Counter (174-175A)
64PKA179B	ABS SCALES 32" X 14" X 4" w/3 axis KA-200 Counter (174-185A)
64PKA180B	ABS SCALES 36" X 14" X 4" w/3 axis KA-200 Counter (174-185A)
64PKA181B	ABS SCALES 36" X 16" X 4" w/3 axis KA-200 Counter (174-185A)
64PKA182B	ABS SCALES 30" X 14" X 6" w/3 axis KA-200 Counter (174-185A)
64PKA183B	ABS SCALES 32" X 14" X 6" w/3 axis KA-200 Counter (174-185A)
64PKA184B	ABS SCALES 36" X 14" X 6" w/3 axis KA-200 Counter (174-185A)
64PKA185A	ABS SCALES 32" X 16" X 6" w/3 axis KA-200 Counter (174-185A)
64PKA186B	ABS SCALES 40" X 18" X 6" w/3 axis KA-200 Counter (174-185A)
64PKA213B	ABS SCALES 40" X 16" X 5" w/3 axis KA-200 Counter (174-185A)
64PKA216B	ABS SCALES 40" X 12" X 5" w/3 axis KA-200 Counter (174-185A)
64PKA217A	ABS SCALES 48" X 18" X 18" w/3 axis KA-200 Counter (174-185A)
64PKA218C	ABS SCALES 60" X 24" X 28" w/3 axis KA-200 Counter (174-185A)
64PKA219B	ABS SCALES 80" X 32" X 28" w/3 axis KA-200 Counter (174-185A)
64PKA225A	ABS SCALES 48" X 18" X 22" w/3 axis KA-200 Counter (174-185A)

Scale lengths provided above specify travel.

3 Axis (Knee) - AT715 Slim Electromagnetic for all axes

Order No.	Description
64PKA187B	ABS SCALES 32" X 13"/14" X 16" w/3 axis KA-200 Counter (174-185A)
64PKA188C	ABS SCALES 36" X 13"/14" X 16" w/3 axis KA-200 Counter (174-185A)
64PKA189C	ABS SCALES 30" X 14" X 16" w/3 axis KA-200 Counter (174-185A)
64PKA190B	ABS SCALES 36" X 16" X 16" w/3 axis KA-200 Counter (174-185A)
64PKA191B	ABS SCALES 36" X 16" X 18" w/3 axis KA-200 Counter (174-185A)
64PKA192C	ABS SCALES 40" X 18" X 16" w/3 axis KA-200 Counter (174-185A)
64PKA193B	ABS SCALES 40" X 18" X 18" w/3 axis KA-200 Counter (174-185A)
64PKA209A	ABS SCALES 32" X 16" X 16" w/3 axis KA-200 Counter (174-185A)
64PKA214C	ABS SCALES 30" X 12" X 16" w/3 axis KA-200 Counter (174-185A)
64PKA215B	ABS SCALES 40" X 12" X 16" w/3 axis KA-200 Counter (174-185A)

Scale lengths provided above specify travel.

Got Questions?

Linear Scales

Linear Scale System Diagram

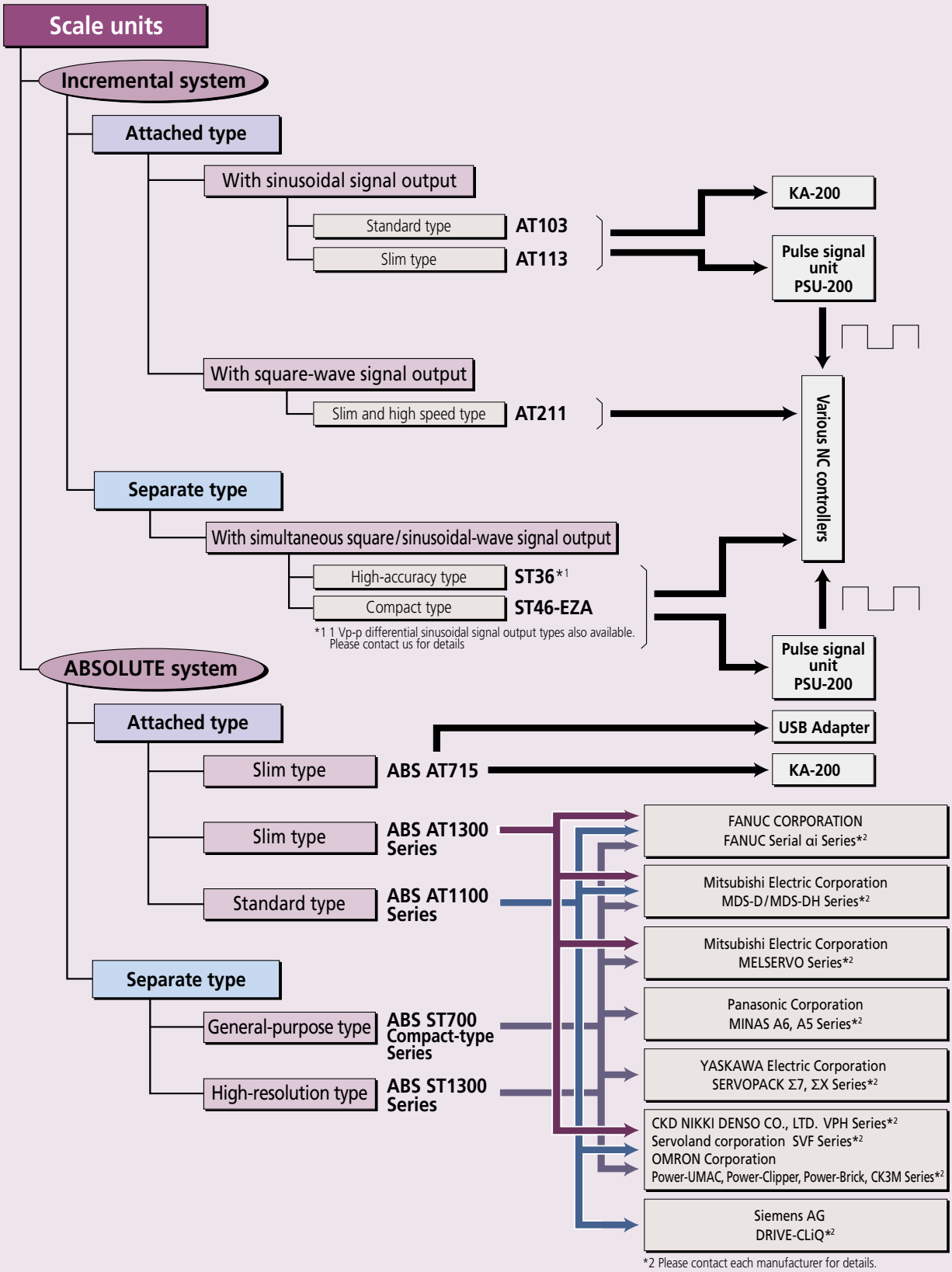

H

Name	Type	Page
AT103	Standard	H-13
AT113	Slim type	H-14
AT211	Slim type high speed	H-15
AT-715	Slim (IP67)	H-16
AT1300	Slim	H-17
AT1100	General-purpose	H-18
ST36	High Accuracy type (Exposed)	H-19
ST46-EZA	Compact type (Exposed)	H-20
ABS ST700	General Purpose Compact type (Exposed)	H-21
ST1300	High Spteed High Accuracy (Exposed)	H-22

AT1100

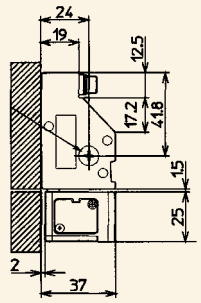

AT103

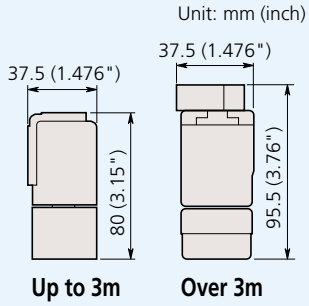

AT715

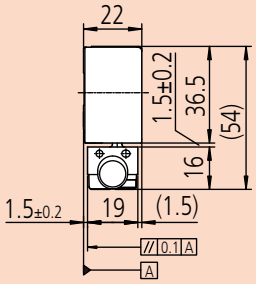

AT1300

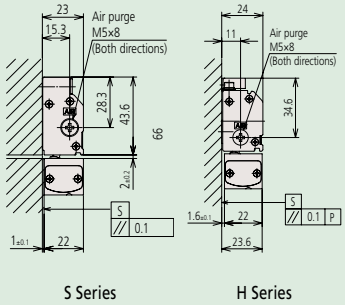

AT113

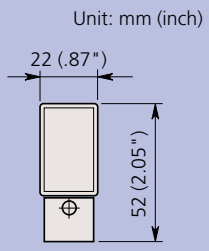

AT211

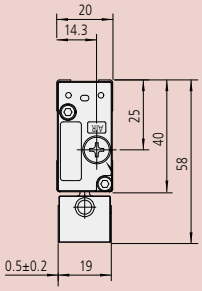

H

Mitutoyo

Linear Scales

Linear Scales AT103
SERIES 539 — Standard Type

- Standard type scale for longer ranges of travel.
- Connectable to the KA-200 counter or PSU-200 square wave adapter.

SPECIFICATIONS

Model	AT103
Effective range	1600 to 6000 mm
Resolution	5 µinch / 0.1 µm
Accuracy (20 °C)	Effective range 1600 to 3000 mm: (5 + 5L0/1000) µm *1 Effective range 3250 to 6000 mm: (5 + 8L0/1000) µm *1
Output signal	Two 90° phase-shifted sinusoidal signals
Maximum response speed	120 m/min (50 m/min when the effective measuring length is 3250 to 6000 mm)
Signal output pitch	20 µm
Scale reference point	Output in 50 mm pitch
Operating temperature	0 to 45° C

Note 1: High precision model **AT103F** (JIS Class 0, (3 + 3L0/1000) µm) is also available to special order for the effective range of 100 to 2000 mm.
Note 2: Ultra-high precision model **AT103S** (2 + 2L0/1000) µm is also available to special order for the effective range of 100 to 500 mm.
*1 **L0=Effective range (mm),** see table below

AT103		Effective range Lo Inch / mm	Signal cable length (m)
Order No.	Model		
539-133-30	**AT103-1600**	64 in / 1600 mm	5
539-134-30	**AT103-1700**	68 in / 1700 mm	
539-135-30	**AT103-1800**	72 in / 1800 mm	
539-136-30	**AT103-2000**	80 in / 2000 mm	
539-137-30	**AT103-2200**	88 in / 2200 mm	
539-138-30	**AT103-2400**	96 in / 2400 mm	7
539-139-30	**AT103-2500**	100 in / 2500 mm	
539-140-30	**AT103-2600**	104 in / 2600 mm	
539-141-30	**AT103-2800**	112 in / 2800 mm	
539-142-30	**AT103-3000**	120 in / 3000 mm	
539-143-30	**AT103-3250**	130 in / 3250 mm	10
539-144-30	**AT103-3500**	140 in / 3500 mm	
539-145-30	**AT103-3750**	150 in / 3750 mm	
539-146-30	**AT103-4000**	160 in / 4000 mm	
539-147-30	**AT103-4250**	170 in / 4250 mm	
539-148-30	**AT103-4500**	180 in / 4500 mm	
539-149-30	**AT103-4750**	190 in / 4750 mm	15
539-150-30	**AT103-5000**	200 in / 5000 mm	
539-151-30	**AT103-5250**	210 in / 5250 mm	
539-152-30	**AT103-5500**	220 in / 5500 mm	
539-153-30	**AT103-5750**	230 in / 5750 mm	
539-154-30	**AT103-6000**	240 in / 6000 mm	

* Models for the effective range 3250 mm or more are made-to-order.

- The **PSU-200** splits the sinusoidal signal output by Mitutoyo linear scales into a minimum of four and a maximum of 200 divisions, and converts the signal to a square-wave signal so that NC feedback systems, measurement control devices, etc., can be used with linear scales in order to achieve highly accurate positioning.
- Connectable to **AT103** and **AT113** Linear Scales.

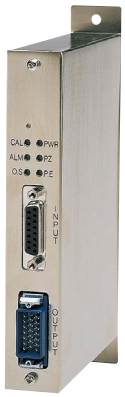

539-005

Pulse Signal/Square-Wave adapter (PSU-200)

Optional Accessories

539-005: Pulse Signal/Square-Wave adapter (PSU-200)
09AAA033A: Extension cable (80" / 2m)
09AAA033B: Extension cable (200" / 5m)
09AAA033C: Extension cable (280" / 7m)

174-183A 2-Axis KA Counter
174-185A 3-Axis KA Counter

174-183A

See page H-8 for details

Cross Section

Unit: mm (inch)

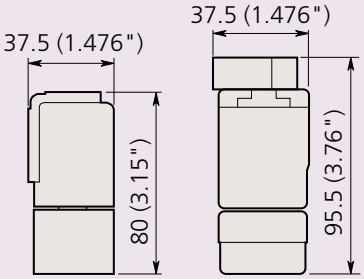

Up to 3m **Over 3m**

Refer to the Linear Scale DRO Systems Brochure (**No. 2217 (4)**) for more details.

Linear Scales AT113
SERIES 539 — Slim Type

- Slim type with unit sectional dimensions of 22×35 mm.
- Connectable to the KA-200 counter or PSU-200.

- Slim type scale.
- Connectable to the KA-200 counter or PSU-200 square wave adapter.

Optional Accessories

539-005: Pulse Signal/Square-Wave adapter (PSU-200)
09AAA033A: Extension cable (80" / 2m)
09AAA033B: Extension cable (200" / 5m)
09AAA033C: Extension cable (280" / 7m)

174-183A 2-Axis KA Counter
174-185A 3-Axis KA Counter

174-183A

See page H-8 for details

Cross Section

Unit: mm (inch)

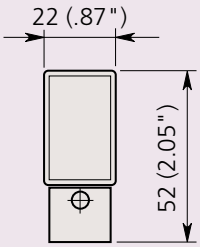

Refer to the Linear Scale DRO Systems Brochure (**No. 2217 (4)**) for more details.

SPECIFICATIONS

Model	AT113
Effective range	100 to 1500 mm
Resolution	5 µinch / 0.1 µm
Accuracy (20 °C)	(5 + 5L0/1000) µm *1
Output signal	Two 90° phase-shifted sinusoidal signals
Maximum response speed	120 m/min
Signal output pitch	20 µm
Scale reference point	Output in 50 mm pitch
Operating temperature	0 to 45° C

*1 **L0=Effective range (mm),** see table below
Note : High precision model **AT113F** (JIS Class 0, 3 + 3L0/1000) µm is also available to special order.

AT113		Effective range Lo inch / mm	Signal cable length (m)
Order No.	Model		
539-201-30	**AT113-100**	4 in / 100 mm	3
539-202-30	**AT113-150**	6 in / 150 mm	
539-203-30	**AT113-200**	8 in / 200 mm	
539-204-30	**AT113-250**	10 in / 250 mm	
539-205-30	**AT113-300**	12 in / 300 mm	
539-206-30	**AT113-350**	14 in / 350 mm	
539-207-30	**AT113-400**	16 in / 400 mm	
539-208-30	**AT113-450**	18 in / 450 mm	
539-209-30	**AT113-500**	20 in / 500 mm	
539-211-30	**AT113-600**	24 in / 600 mm	
539-213-30	**AT113-700**	28 in / 700 mm	
539-214-30	**AT113-750**	30 in / 750 mm	
539-215-30	**AT113-800**	32 in / 800 mm	
539-216-30	**AT113-900**	36 in / 900 mm	
539-217-30	**AT113-1000**	40 in / 1000 mm	5
539-218-30	**AT113-1100**	44 in / 1100 mm	
539-219-30	**AT113-1200**	48 in / 1200 mm	
539-220-30	**AT113-1300**	52 in / 1300 mm	
539-221-30	**AT113-1400**	56 in / 1400 mm	
539-222-30	**AT113-1500**	60 in / 1500 mm	

Linear Scales

Linear Scales AT211-A (Multipoint Mounting)
AT211-B (Double-end Mounting)
SERIES 539 — Slim and High Speed Type

- This is a slim, sealed, 2-phase square-wave scale that can be directly connected to a control unit.
- Scale alarm LED enables easy maintenance.
- A wide range of specifications to best suit your application.
- Suitable for the control (positioning and speed) of semiconductor manufacturing systems and NC machine tools.
- Contact Mitutoyo America for an estimate.

SPECIFICATIONS

Model	AT211 Only available via special quote due to large possibility of specification combinations.
Effective range*	100 to 1500 mm
Resolution	Selectable down to 5 µinch / 0.1 µm
Accuracy (20 °C)*	(3 + 3L0/1000) µm **L0=effective range (mm)**
	(2 + 2L0/1000) µm (L0≤500 mm)
Output signal	2-phase square-wave signals (RS-422A compatible)
Maximum response speed*	5.4 to 120 m/min (varies depending on the resolution or minimum edge interval)
Resolution*	0.1/0.2/0.5/1.0/2.5/5.0 µm
Scale reference point*	50 mm pitch/Center point/Left-edge point/Right-edge point
Operating temperature	0 to 45° C

* Desired specification is selectable.

H

Meaning of Model No.

AT211 - 0100 A 1 S - P 1 - A B

- 0100: Effective range: 100 to 1500 mm
- A: Mounting method: Multipoint mounting/Double-end mounting
- 1: Scale reference point: 50 mm pitch/Center point/Left edge point/Right edge point
- S: Indication accuracy: (3 + 3L0/1000) µm/(2 + 2L0/1000) µm
- P: Resolution/Minimum edge-to-edge interval: 0.1 to 5 µm/125 to 1000 ns, 22 types
- 1: Direction: PA/PB phase
- A: Head cable: 0.3 to 9 m, 9 types
- B: Signal cable: 3 to 7 m/None, 10 types

Where to Buy

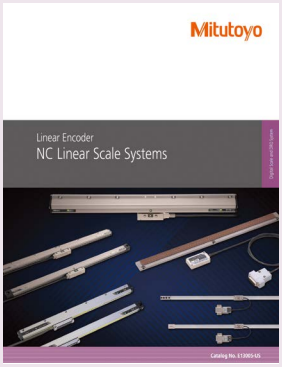

Refer to the NC Linear Scale Systems Brochure (**E13005-US**) for more details.

ABSOLUTE™

IP67

- The electromagnetic induction principle adopted means ABSOLUTE system-type linear scales are highly resistant to environmental contamination.
- ABSOLUTE scales have eliminated the need for origin restoration, also drastically reducing power consumption.
- Comes with 5 year warranty.

Linear Scales ABS AT715 SERIES 539 — Slim Type

SPECIFICATIONS

Model	ABS AT715
Detection method	Electromagnetic induction
Minimum resolution	20 µinch to .001 0.001 mm to 0.01 mm (Changeable by parameter on the **KA-200** counter)
Effective range	100 to 3000 mm
Accuracy (20° C)	±5 µm (L_0: 100 to 500 mm) ±7 µm (L_0: 600 to 1800 mm) ±10 µm (L_0: 2000 to 3000 mm)*1
Maximum response speed	50 m/min
Protection level	IP67
Sliding force	5 N or less
Signal cable	Standard Accessories Refer to the dimension table shown below for the length.
Connectable counter	**KA-200** Counter

*1 **L_0=Effective range (mm)**

AT715		Effective range Lo inch / mm	Signal cable length (m)
Order No.	Model		
539-801N	**ABS AT715-100**	4 in / 100 mm	3.5
539-802N	**ABS AT715-150**	6 in / 150 mm	
539-803N	**ABS AT715-200**	8 in / 200 mm	
539-804N	**ABS AT715-250**	10 in / 250 mm	
539-805N	**ABS AT715-300**	12 in / 300 mm	
539-806N	**ABS AT715-350**	14 in / 350 mm	
539-807N	**ABS AT715-400**	16 in / 400 mm	
539-808N	**ABS AT715-450**	18 in / 450 mm	
539-809N	**ABS AT715-500**	20 in / 500 mm	
539-811N	**ABS AT715-600**	24 in / 600 mm	
539-813N	**ABS AT715-700**	28 in / 700 mm	
539-814N	**ABS AT715-750**	30 in / 750 mm	
539-815N	**ABS AT715-800**	32 in / 800 mm	
539-816N	**ABS AT715-900**	36 in / 900 mm	
539-817N	**ABS AT715-1000**	40 in / 1000 mm	5
539-818N	**ABS AT715-1100**	44 in / 1100 mm	
539-819N	**ABS AT715-1200**	48 in / 1200 mm	
539-820N	**ABS AT715-1300**	52 in / 1300 mm	
539-821N	**ABS AT715-1400**	56 in / 1400 mm	
539-822N	**ABS AT715-1500**	60 in / 1500 mm	
539-823N	**ABS AT715-1600**	64 in / 1600 mm	
539-824N	**ABS AT715-1700**	68 in / 1700 mm	
539-825N	**ABS AT715-1800**	72 in / 1800 mm	
539-860N	**ABS AT715-2000**	80 in / 2000 mm	
539-861N	**ABS AT715-2200**	88 in / 2200 mm	
539-862N	**ABS AT715-2400**	96 in / 2400 mm	7*
539-863N	**ABS AT715-2500**	100 in / 2500 mm	
539-864N	**ABS AT715-2600**	104 in / 2600 mm	
539-865N	**ABS AT715-2800**	112 in / 2800 mm	
539-866N	**ABS AT715-3000**	120 in / 3000 mm	

* Combination of a 5 m signal cable and a 2 m extension cable

Optional Accessories

09AAB674A: Extension cable (80" / 2m)
09AAB674B: Extension cable (200" / 5m)
09AAB674C: Extension cable (280" / 7m)

64AAB545: USB Adapter (virtual COM port)

174-183A 2-Axis KA Counter
174-185A 3-Axis KA Counter

174-183A

See page H-8 for details

Refer to the Linear Scale DRO Systems Brochure (**No. 2217 (4)**) for more details.

Mitutoyo

Linear Scales

Linear Scales ABS AT1300 — Slim Type
Attached Type Scale Unit for ABSOLUTE Systems

ABS AT1300-S

ABS AT1300-H

- Outstanding resistance to contamination compared to conventional optical types by using a new detection principle (in-house testing result).
- Features a new coolant-proof design incorporating a high-performance rubber seal to provide higher reliability in the harsh factory environment.
- Delivers high accuracy and the outstanding resolution of 0.001 µm, the best-in-class in ABSOLUTE scales.
- Allows space-saving design thanks to a slim form.
- Supports the interfaces of various manufacturers allowing a variety of system configurations.

SPECIFICATIONS

	High rigidity type	High accuracy type
Model	**ABS AT13□□(A)-S**	**ABS AT13□□(A)-H**
Detection method	Optical	
Resolution	0.001/0.01/0.05 µm (1 / 10 / 50 nanometer)	
Maximum response speed	3 m/s	
Maximum effective measuring length	2.2 m	1 m
Accuracy (20° C)	(3 + 3L0/1000) µm*1	(2 + 2L0/1000) µm*1
Reference point*2	Center of the effective measuring length	
Operating temperature (humidity) range	0 to 50° C (RH 20 to 80%, non-condensing)	
Storage temperature (humidity) range	–20 to 70° C (RH 20 to 80%, non-condensing)	

*1 **L0=Effective range (mm)**
*2 Scale is mechanically fixed at this point, therefore expansion caused by temperature fluctuations are relative to this point.

H

Meaning of Model No.

ABS AT13□□□ - □□□□ - □

Interface specifications

Effective range

Type of the scale unit
S: High rigidity type
H: High accuracy type

Model	Applicable system
ABS AT135□	FANUC CORPORATION Serial αi Interface
ABS AT134□	Mitsubishi Electric Corporation MDS-D/MDS-DH Series
ABS AT134□A	Mitsubishi Electric Corporation MELSERVO servo amplifier MR-J5 Series, MR-J4 Series
ABS AT138□A	YASKAWA Electric Corporation SERVOPACK Σ7, ΣX Series
ABS AT130□A	Mitutoyo ENSIS

Note 1: Be sure to contact each manufacturer for details of the applicable systems.

Note 2: **ABS AT13□□□**

Resolution
7: 0.001 µm
4: 0.01 µm
3: 0.05 µm

Transmission method
Nothing: Full duplex communication
A: Half-duplex communication

Signal cable specifications (optional)

Items	Specifications
Cable length	1 m, 2 m, 3 m, 4 m, 5 m, 6 m, 7 m, 8 m, 9 m, 12 m
Cable material	PVC sheath (ø6.5 mm), High-flex connecting cable (No metal conduit)
I/O output connector	Flying lead specifications FANUC specifications Mitsubishi specifications D-sub specifications (Alarm display LED mounted)

Get a Quote

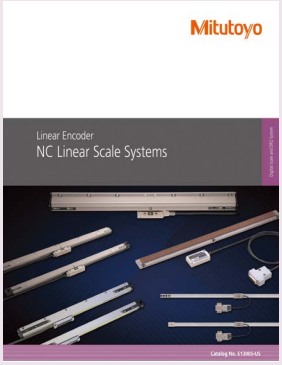

Refer to the NC Linear Scale Systems Brochure (**E13005-US**) for more details.

Linear Scales ABS AT1100
Attached Type Scale Unit for ABSOLUTE Systems

- Features a new coolant-proof design incorporating a high-performance rubber seal to provide higher reliability in the harsh factory environment.
- The 0.4 mm air gap between the sensors is approximately four times wider than the conventional optical or magnetic sensors. Therefore, the chance of foreign objects lodging in this gap is lower. This air gap is the world's largest in this class of scale used on machine tools.
- The de facto standard multi-point fixing method for the frame is adopted, resulting in high vibration/shock-resistance.
- Due to an improvement in the signal processing technique for the electromagnetic induction ABSOLUTE linear encoder, the repeatability is six times better than our conventional model.
- Being compatible with the high-speed serial interface of each company, a direct connection to the NC controller is possible.

ABS AT1100

SPECIFICATIONS

Model	**ABS AT11□3(A)**
Detection method	Electromagnetic induction
Mounting method	Frame multipoint
Effective range	140 to 3040 mm
Resolution	0.05 µm (50 nanometer)
Maximum response speed	3 m/s
Accuracy (20° C)	Effective range L_0=140 to 2040 mm: 3 + 5L_0/1000 (µm) Effective range L_0=2240 to 3040 mm: 5 + 5L_0/1000 (µm)
Expansion coefficient	≈8×10^{-6}/K
Vibration resistance	≤196 m/s^2 (20 G) (55 to 2000 Hz)
Shock resistance	Effective range L_0=140 to 2040 mm: ≤ 343 m/s^2 (35 G) Effective range L_0=2240 to 3040 mm: ≤ 294 m/s^2 (30 G) (1/2 sin 11 ms)
Power supply voltage	**ABS AT1153/1143/1103A**: 5 VDC ± 10% **ABS AT1123**: DC24 V (Conforming to DRIVE-CLiQ)
Maximum current consumption	**AT1153**: 300 mA (Max.) **AT1143**: 290 mA (Max.) **AT1123**: 140 mA (Max.) **AT1103A**: 300 mA (Max.)
Operational temperature (humidity) ranges	0 to 50° C (RH 20 to 80%, non-condensing)
Storage temperature (humidity) ranges	–20 to 70° C (RH 20 to 80%, non-condensing)

*1 **L_0=Effective range (mm),** see table below

Meaning of Model No.

ABS AT11□3 - □□□□

Effective range

Interface specifications

Model	Applicable system
ABS AT1153	FANUC CORPORATION Serial αi Interface
ABS AT1143	Mitsubishi Electric Corporation MDS-D/MDS-DH Series
ABS AT1123	Siemens AG DRIVE-CLiQ
ABS AT1103A	Mitutoyo ENSIS

Note 1: Please contact each manufacturer for details of the applicable systems.

Note 2: **ABS AT11□3□**

Transmission method
Nothing: Full duplex communication
A: Half-duplex communication

Signal cable specifications (optional)

Items	Specifications
Cable length	1 m, 3 m, 6 m, 9 m, 12 m
Cable material	PVC sheath ø6.5 Without conduit, High-flex specification with conduit PUR sheath ø6.5 Without conduit
I/O output connector	Flying lead specifications FANUC specifications Mitsubishi specifications Mitutoyo standard specifications Siemens specifications M12 connector specifications

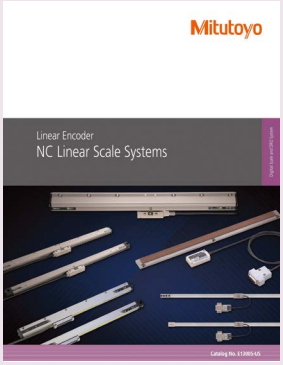

Refer to the NC Linear Scale Systems Brochure (**E13005-US**) for more details.

Linear Scales

Linear Scales ST36
SERIES 579 — High Accuracy Type

- Outputs 2-phase sinusoidal wave signals at 4 µm pitch.
- The maximum effective measuring length is 3000 mm when the resolution is 0.01/0.02/0.05/0.1 µm (2-phase square-wave is output).
- Compact detector head enables space saving design.
- Along with the output specifications of 2-phase sinusoidal wave and 2-phase square-wave, the output specification of 1 Vp-p wave is also available.
- Equipped with the function to display signal errors on the LED.

SPECIFICATIONS

Model	**ST36**
Detection method	Optical
Output signal	**ST36A**: 2 Vp-p sinusoidal signals **ST36B**: 2-phase square-wave signals (RS-422A compatible), Alarm reset input **ST36C**: 2-phase square-wave signals (RS-422A compatible), 2-phase sinusoidal signals **ST36D**: 1 Vp-p differential sinusoidal signals
Main scale grating pitch	8 µm
Signal output pitch	4 µm
Effective range	10 to 3000 mm
Accuracy (20° C)*1	±0.5 µm, ±1 µm, ±2 µm/m
Maximum response speed*2	1200 mm/s
Scale reference point	10 to 80 mm: 1 center point; 100 to 300 mm: 50 mm pitch
Power supply voltage	5 VDC ± 5%
Operating temperature (humidity) range	0 to 40° C (20 to 80% RH, non-condensing)
Storage temperature (humidity) range	–20 to 60° C (20 to 80% RH, non-condensing)
Head cable length	1 m (high-flex connecting cable)

*1

Effective range	Accuracy
300 mm or less	±0.5 µm
500 mm or less	±1 µm
1000 mm or less	±2 µm
3000 mm or less	±2 µm/m

*2 Maximum response speed when sinusoidal signals are output

Need Support?

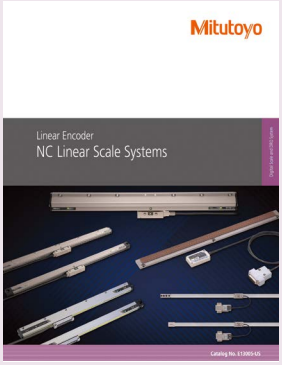

Refer to the NC Linear Scale Systems Brochure (**E13005-US**) for more details.

Linear Scales ST46-EZA
SERIES 579 — Compact Type

- Includes an automatic adjusting function for the signal (EZA function) at the push of a button.
- Detector head mounting and signal adjustment possible without oscilloscope or PC.
- A setup indicator for checking signal strength is included.
- When connected with a PC it is possible to check signal strength and set parameter (Optional application program required).
- I/F circuit integrated in connector shell reduces volume to compared to conventional interface.
- The thickness of the detector head is only 7.5 mm. The metal tape scale type has a mounting surface area of 12.5 by 9.325 mm, allowing use in applications where a space-saving design is important.
- Glass and metal tape versions are available.

Glass Scale Type

Metal Tape Scale Type

•Double-end mounting design

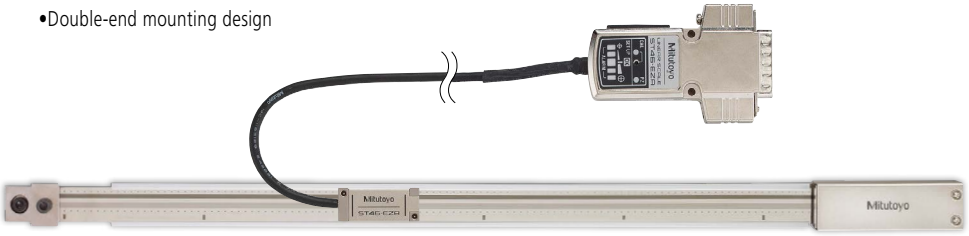

•Double-sided tape mounting design

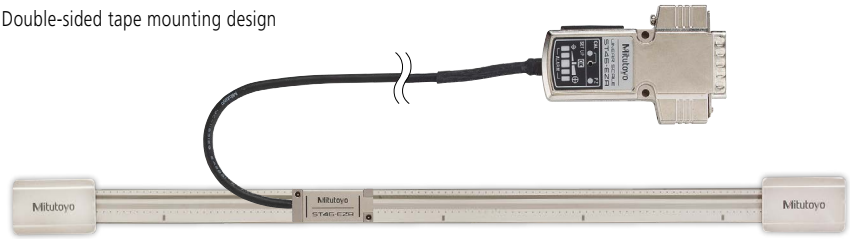

SPECIFICATIONS

Model	ST46-EZA	
Detection method	Optical	
Scale type	Glass	Metal tape
Main scale grating pitch	20 µm	
Output signal	Type B: 2-phase square-wave signals (RS-422A compatible), reference point pulse, external reset input. Type C: 2-phase square-wave signals (RS-422A compatible), reference point pulse, 2-phase sinusoidal signals.	
Effective range	10 to 3000 mm	
Accuracy (20° C)	Effective range 10 to 300 mm: ±1 µm Effective range 350 to 500 mm: ±2 µm Effective range 600 to 1000 mm: ±3 µm Effective range 1100 to 3000 mm: ±3 µm/m	Effective range 10 to 1000 mm: ±5 µm*1 Effective range 1100 to 3000 mm: ±5 µm/m*1
Maximum response speed	2.6 m/s (at the point where the sinusoidal signal amplitude has decreased by 3 dB)	
Scale reference point	10 to 80 mm: 1 center point; 100 to 300 mm: 50 mm pitch	
Power supply voltage	5 VDC ± 5%	
Operating temperature (humidity) range	0 to 40° C (RH 20 to 80%, non-condensing)	
Storage temperature (humidity) range	–20 to 60° C (RH 20 to 80%, non-condensing)	
Head cable length	1 m (high-flex connecting cable)	

*1 The above accuracy applies to individual scales. For double-end mounting designs, perform point-to-point correction after ensuring the metal tape is tensioned correctly.

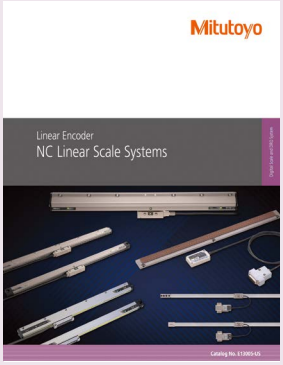

Refer to the NC Linear Scale Systems Brochure (**E13005-US**) for more details.

Linear Scales

ABSOLUTE™

Linear Scales ABS ST700
SERIES 579 — General-purpose Type

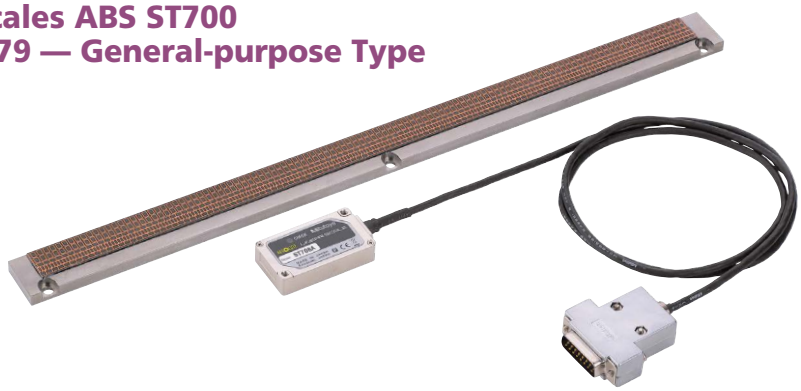

- ABSOLUTE measurement with separate type scales
- Non-contact detection is optimal for high speed and high acceleration devices such as linear motors
- Electromagnetic induction principle means scales are unaffected by water and oil contamination
- The detector head is approximately 1/3 the previous model size: 50 mm (W) × 28 mm (D) ×11 mm (H)
- Cable outlets can be in four directions, with mounting holes on the top and sides
- Compatible with servo amplifiers from a range of companies (high-speed serial interfaces)

SPECIFICATIONS

Model	ABS ST700	
Scale type	Scale base	
Resolution	0.1 µm	
Detection method	Electromagnetic induction	
Max. effective range	100 to 2000 mm	
Accuracy (20° C)	5 + (5L/1000) µm*1	5 + (5L/1000) µm*1
Maximum response speed	5 m/s	
Power supply voltage	5 VDC ± 10% (at the detection head) (Ripple+spike noise component should be less than 100 mV)	
Maximum current consumption	270 mA	
Head cable length	1 m (high-flex connecting cable)	
Maximum cable length	29 m (including the head cable length)	
Operating temperature (humidity) range	0 to 50° C (RH 20 to 80%, non-condensing)	0 to 50° C (RH 20 to 70%, non-condensing)
Storage temperature (humidity) range	–20 to 70° C (RH 20 to 80%, non-condensing)	–20 to 60° C (RH 20 to 70%, non-condensing)

*1 **Lo=Effective range (mm)**

Meaning of Model No.

ABS ST7 0 8 A L - 100 A - R

ABSOLUTE type

Series name
Separate Type ABSOLUTE Linear Scale
ABS ST700 Compact-type Series (Effective range ≤ 3 m)
ABS ST700 Compact-type Series (3.2 m ≤ Effective range ≤ 6 m)

Interface specification*1
0:Supports Mitutoyo ENSIS high-speed serial interface
ABS ST708A
4:Supports Mitsubishi Electric Corporation, high-speed serial interface
ABS ST748A, **ABS ST748**
5:Supports FANUC CORPORATION, high-speed serial interface
ABS ST758, **ST758L**
7:Supports Panasonic Corporation, high-speed serial interface
ABS ST778A
8:Supports YASKAWA Electric Corporation, high-speed serial interface
ABS ST788A

A: Scale base type

Effective range: 100 to 2000 mm

Nothing: 100 to 3000 mm*
L: 3200 to 6000 mm*
*Lengths over 2000mm no longer available.

Transmission method
A: 2-wire system
Nothing: 4-wire system

Detection head form and resolution
8: Form: 50 (W)×28 (D)×11 (H) mm
Resolution: 0.1 µm
9: 0.05 µm resolution (to special order)

Head cable outlet direction
R: Right side
L : Left side
U: Upper side
D: Lower side

Available Interfaces*1

FANUC CORPORATION, FANUC Serial αi Series
Mitsubishi Electric Corporation, MDS-D/MDS-DH Series
Mitsubishi Electric Corporation, MELSERVO Series Servo Amplifier MR-J5 Series, MR-J4 Series, MR-J3 Series
YASKAWA Electric Corporation, SERVOPACK Σ7, ΣX Series
Panasonic Corporation, MINAS A6, A5 Series
Mitutoyo ENSIS*2 CKD NIKKI DENSO CO., LTD. VPH Series Servoland Corporation SVF Series OMRON Corporation Power-UMAC, Power-Clipper, Power-Brick, CK3M Series

*1 Be sure to contact each manufacturer for details of the applicable systems (availability of connection).
*2 ENSIS is a registered trademark of Mitutoyo Corporation.

Need Service?

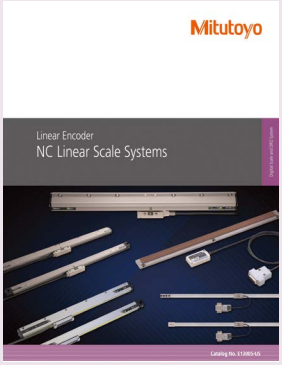

Refer to the NC Linear Scale Systems Brochure (**E13005-US**) for more details.

Linear Scales ABS ST1300 SERIES 579

- Effective range: 12 m, Maximum response speed: 8 m/s, Resolution: 1 nm
- Various interfaces are supported.
- A new detection method has improved robustness in regards to contamination resistance and gap tolerance (in-house testing result).
- Can be mounted using double-sided tape or screws (on both sides or at the center of the unit).
- Signal check program enables integrity check and maintenance.

Double-end mounting type

Center mounting

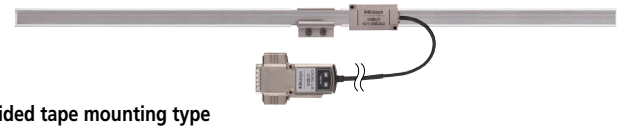

Double-sided tape mounting type

SPECIFICATIONS

Model	ABS ST1300		
Detection method	Optical		
Scale type	Double-end mounting	Center mounting	Double-sided tape mounting
Maximum effective range	12000 mm	6000 mm	3000 mm
Accuracy (20° C)	±5 µm (1 m or less), ±5 µm/m (1.1 m or more)*4	With system parameters: ±5 µm (1 m or less), ±5 µm/m (1.1 m or more) Without system parameters: ±10 µm (1 m or less), ±10 µm/m (1.1 m or more)	±5 µm (1 m or less), ±5 µm/m (1.1 m or more)
Maximum response speed	8 m/s or less		
Expansion coefficient	≈10×10^{-6}/K*5	≈10×10^{-6}/K	≈10×10^{-6}/K*2
Power supply	5 VDC ± 10%		
Maximum current consumption	270 mA or 250 mA (depends on interface)		
Cable length	1 m (high-flex connecting cable)		
Maximum cable length	29 m (including head cable)		
Usable temperature (humidity) range	0 to 50° C (RH 20 to 70%, non-condensing)		
Storage temperature (humidity) range	–20 to 70° C (RH 20 to 70%, non-condensing)		

*2 Thermal expansion coefficient occasionally change, as the difference between scale material's and sealing surface material's is excessive.
*4 Tension fix is adopted to be stable the temperature property. Because scale tension is longer 250 µm/m, the accuracy compensation is needed over the system.
*5 Thermal expansion coefficient after mounted conform to expansion/contraction of mounted surface by changing outer temperature (Double-end fixing type).
Note: For details on specification, mounting procedure, and adjustments, refer to the corresponding brochure and operation manual.

Available Interfaces*1

FANUC CORPORATION, FANUC Serial αi Series
Mitsubishi Electric Corporation, MELSERVO Series Servo Amplifier MR-J5 Series, MR-J4 Series
YASKAWA Electric Corporation, SERVOPACK Σ7, ΣX Series
Panasonic Corporation, MINAS A6, A5 Series
Mitutoyo ENSIS*2

*1 Be sure to contact each manufacturer for details of the applicable systems (availability of connection).
*2 ENSIS is a registered trademark of Mitutoyo Corporation.

Refer to the NC Linear Scale Systems Brochure (**E13005-US**) for more details.

Meaning of Model No.

ABS ST13 4 1 A - 1200 D

ABSOLUTE type

Series name
Separate Type ABSOLUTE Linear Scale

Interface specification*1
0: Supports Mitutoyo ENSIS high-speed serial interface
ABS ST130□A
4: Supports Mitsubishi Electric Corporation, high-speed serial interface
ABS ST134□A
5: Supports FANUC CORPORATION, high-speed serial interface
ABS ST135□
7: Supports Panasonic Corporation, high-speed serial interface
ABS ST137□A
8: Supports YASKAWA Electric Corporation, high-speed serial interface
ABS ST138□A

Resolution
1: Resolution 0.01 µm
2: Resolution 0.001 µm

Transmission method
A: Half-duplex method
Nothing: Full duplex method or Half-duplex method/Half-duplex method

Effective range: 10 to 12000 mm

Scale mount
D: Double-end mounting
E: Double-sided tape mounting
F: Center mounting (With system parameters)
G: Center mounting (Without system parameters)

Glossary

ABSOLUTE (ABS) system
A measurement mode in which every point measurement is made relative to a fixed origin point.

Incremental system
A measurement mode in which every point measurement is made relative to a certain stored reference point.

Origin offset
A function that enables the origin point of a coordinate system to be translated to another point offset from the fixed origin point. For this function to work, a system needs a permanently stored origin point.

Restoring the origin point
A function that stops each axis of a machine accurately in position specific to the machine while slowing it with the aid of integrated limit switches.

Sequence control
A type of control that sequentially performs control steps according to a prescribed order.

Numerical control
A way of controlling the movements of a machine by encoded commands created and implemented with the aid of a computer (CNC). A sequence of commands typically forms a 'part program' that instructs a machine to perform a complete operation on a workpiece.

Binary output
Refers to output of data in binary form (ones and zeros) that represent numbers as integer powers of 2.

RS-232C
An interface standard that uses an asynchronous method of serial transmission of data over an unbalanced transmission line for data exchange between transmitters located relatively close to each other. It is a means of communication mainly used for connecting a personal computer with peripherals.

Line driver output
This output features fast operating speeds of several tens to several hundreds of nanoseconds and a relatively long transmission distance of several hundreds of meters. A differential-voltmeter line driver (RS-422A compatible) is used as an I/F to the NC controller in the linear scale system.

RS-422
An interface standard that uses serial transmission of bits in differential form over a balanced transmission line. RS-422 is superior in its data transmission characteristics and in its capability of operating with only a single power supply of 5 VDC.

Accuracy
The accuracy specification of a scale is given in terms of the maximum error to be expected between the indicated and true positions at any point, within the range of that scale, at a temperature of 20 °C. Since there is no international standard defined for scale units, each manufacturer has a specific way of specifying accuracy. The accuracy specifications given in our catalog have been determined using laser interferometry.

Narrow range accuracy
Scale gratings on a scale unit normally adopt 20 µm pitch though it varies according to the kind of scale. The narrow range accuracy refers to the accuracy determined by measuring one pitch of each grating at the limit of resolution (1 µm for example).

Specifying Linear Scale Accuracy

Positional Indication accuracy

The accuracy of a linear scale is determined by comparing the positional value indicated by the linear scale with the corresponding value from a laser length measuring machine at regular intervals using the accuracy inspection system as shown in the figure below. As the temperature of the inspection environment is 20° C, the accuracy of the scale applies only in an environment at this temperature. Other inspection temperatures may be used to comply with internal standards.

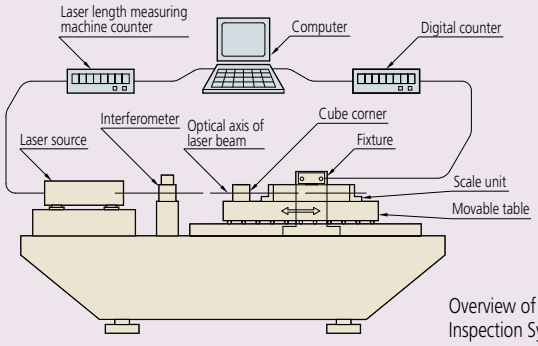

Overview of Accuracy Inspection System

The accuracy of the scale at each point is defined in terms of an error value that is calculated using the following formula:

Error = Value indicated by Laser length measuring machine
– Corresponding value indicated by the linear scale

A graph in which the error at each point in the effective positioning range is plotted is called an accuracy diagram.

There are two methods used to specify the accuracy of a scale, unbalanced or balanced, described the right.

(1) Unbalanced accuracy specification - maximum minus minimum error

This method simply specifies the maximum error minus the minimum error from the accuracy graph, as shown below. It is of the form: $E = (\alpha + \beta L)$ µm. L is the effective range (mm), and α and β are factors specified for each model.

For example, if a particular type of scale has an accuracy specification of $(3 + \frac{3L}{1000})$ µm and an effective range of 1000 mm, E is 6 µm.

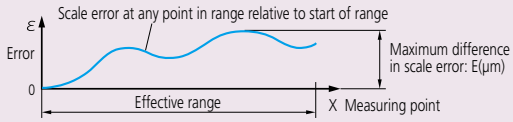

(2) Balanced accuracy specification - plus and minus about the mean error

This method specifies the maximum error relative to the mean error from the accuracy graph. It is of the form: $e = \pm\frac{E}{2}$ (µm). This is mainly used in separate-type (retrofit) scale unit specifications.

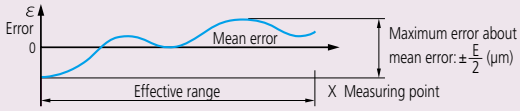

A linear scale detects displacement based on graduations of constant pitch. Two-phase sinusoidal signals with the same pitch as the graduations are obtained by detecting the graduations. Interpolating these signals in the electrical circuit makes it possible to read a value smaller than the graduations by generating pulse signals that correspond to the desired resolution. For example, if the graduation pitch is 20 µm, interpolated values can generate a resolution of 1 µm.

The accuracy of this processing is not error-free and is called interpolation accuracy. The linear scale's overall positional accuracy specification depends both on the pitch error of the graduations and interpolation accuracy.

Mitutoyo

Featured Products

Profile Projectors

PJ-H30

Refer to page I-7 for details.

Microscopes

MF

Refer to page I-18 for details.

Microscopes

MF-UD

Refer to page I-21 for details.

INDEX

Profile Projectors

PH-3515F	I-3,4
PJ-PLUS	I-5,6
PJ-H30-High Accuracy	I-7,8
PV-5110	I-9,10
Accessories for Profile Projectors	I-11
QM-Data Interface Unit	I-12
M2 User Interface	I-13
Kitted Machine & Interface Packages	I-14
Overlay Chart Set	I-15
Quick Guide to Precision Measuring Instruments - Profile Projectors	I-16

Microscopes

TM-505B/1005B Toolmakers' Microscopes	I-17
MF Measuring Microscopes	I-18,19
MF Motorized Type	I-20
MF-U High-power Multi-function	I-21,22
MF-U Motorized Type Universal	I-23
Accessories for Measuring Microscope	I-24,25
QM-Data200 2-D Processing Unit	I-26
Vision Unit System Retrofit	I-27
FS-70 For Semiconductor Inspection	I-28
VMU Video Microscope Unit	I-29
Varifocal Lens	I-30
Eyepieces	I-31
Objectives	I-31,32,33,34,35
MSM-400 Stereo Microscopes	I-36,37
Pocket Comparators	I-38
Zoom Loupe	I-38
Clear Loupe	I-38
Quick Guide to Precision Measuring Instruments - Microscopes	I-39,40

Mitutoyo

Profile Projectors

PH-3515F
SERIES 172 — Profile Projector

- Benchtop model uses a horizontal optical system.
- Suitable for thread pitch measurements—blurred or distorted images will not be produced when workpiece is angled.
- Erect image on the day-bright screen.
- Standard twin fiber-optic illumination.
- 14" (353mm) diameter protractor screen with cross-hairs and staggered lines for easy alignment.
- Digital angle measurement to 1' or 0.01°.
- Heavy-duty workpiece table incorporates linear scales for fast, accurate measurement.
- Built-in linear scales for use with optional display counters.

PH-3515F

2D Coordinate Interfacing RETROFITS

Model No.	Description
64PKA-M2-P	M2 Non-edge Detection Unit with ASUS Touchscreen PC
64PKA-M2-PE	M2 with Edge Detection Unit & ASUS Touchscreen PC
264-161-13A	QM-DATA200 Arm Type (PJ-Plus)

Built-in Surface Illumination

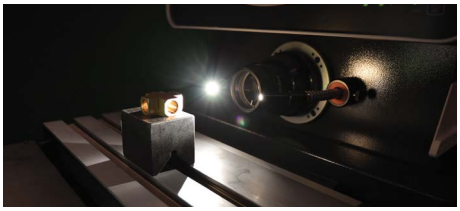

Includes Built-in Twin Fiber Optics to assist with measuring surface features/defects.

Flexible housing allows the lighting condition to be easily manipulated for a user dealing with a lighting situation.

PH-3515 offers a variety of illumination options from crisp couture illumination users have come to expect, as well as coaxial and surfaces illumination.

- Inspect edges with ease
- Amplify surface features
- Examine small changes in typography (markings, scratching, dents)

KA Counter (174-183A)
(Refer to page H-8 for more details.)
64AAB149: Counter stand

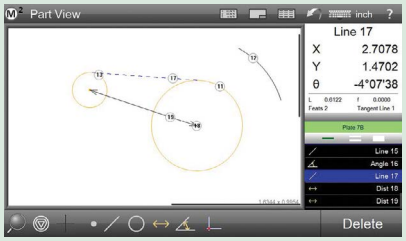

M2 Graphics-based "Part View"constructions
Generate popular construction types, like distances and tangent lines, from within the graphical part view.

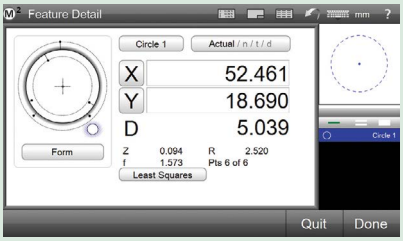

M2 Geometric tolerance view
Measure features, set nominals, apply tolerances and view deviation results with only a few quick clicks.

Accessories for Common Industry Applications

Durable working stage with built-in T slots allows for fixtures to be seamlessly mounted to a stage. Mitutoyo offers a variety of fixturing options on the PH-3515F which were made to accommodate common industry applications

- In the picture to the left is the Mitutoyo Tipped Saw Support Stand (172-001) used for streamlined inspection of each tooth grind, ensuring its consistency and accuracy across teeth on a saw blade

172-001

172-002

Profile Projectors

Projection Capacity

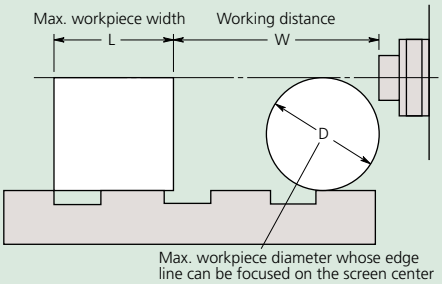

PH-3515F Unit: mm

	Magnification			
	10X (standard)	20X	50X	100X
View field	35.3	17.65	7.06	3.5
L	235	235	80	109
W	93 (41)	40	14.6	9.5
D	152.4	116	30.4	19

( ): When using surface illumination

Optional Accessories

172-482: 10X projection lens set (standard accessory)
172-483: 10X projection lens
172-484: 20X projection lens set
172-485: 20X projection lens
172-486: 50X projection lens set
172-487: 50X projection lens
172-166: 100X projection lens set
64PMI308: Machine stand
172-116: Standard scale (50mm)
172-117: Standard scale (2")
172-118: Reading scale (200mm)
172-161: Reading scale (300mm)
172-119: Reading scale (8")
172-162: Reading scale (12")
172-286: Green filter
512305: Halogen bulb (24V, 150W) (standard accessory)
172-425: Twin surface illumination

Fixture and Stage Accessories*

172-600: Center support
172-601: Center support riser
172-602: Rotary vise (Max. workpiece dia.: 2.3" / 60mm)
172-603: V-block with clamp (Max. workpiece dia.: 2" / 50mm)
172-132: Vertical holder
172-001: Tipped-saw support stand
172-002: Cutter support stand
* See page I-13 for details

Find a Distributor

SPECIFICATIONS

Model No.		PH-3515F
Order No.		**172-868-11A***
Projected image		Erect image
Protractor screen	Effective diameter	14" / 353mm
	Screen material	Fine ground glass
	Reference line	Cross hair line
	Screen rotation	±360°, fine feed and clamp
	Angle display (LED)	Resolution: 1' or 0.01° (switchable), Range: ±370°, Functions: ABSOLUTE/incremental mode switching, Zero set
Projection lens		Standard accessory: 10X (172-184), Optional accessories: 5X, 20X, 50X, 100X
Magnification accuracy	Contour illumination	±0.1% or less
	Surface illumination	±0.15% or less
Contour illumination	Light source	Halogen bulb (24V 150W)
	Optical system	Telecentric system
	Functions	2-step brightness switch, Heat-absorbing filter, Cooling fan
Surface illumination (Optional accessories)	Light source	Halogen bulb (24V 150W)
	Functions	Adjustable condenser lens. Heat-absorbing filter, Cooling fan
	Table travel (X-axis)	10" / 254mm
	Table size (X, Z)	17.7"x5.7" / 450x146mm
	Vertical travel (Y-axis)	6" / 152mm
	Resolution	0.001mm/.00005"*
	Measuring Unit	Built-in Llnear scale
	Max. workpiece width	See (L) in chart to left
	Max. workpiece load	100lbs / 45kg
Power supply		120V AC, 50/60Hz
Mass		333lbs / 150kg
Standard accessories		10X projection lens set, work stage, power cord, halogen bulb, tube fuse, grounding wire, allen wrench

* Counter not included

DIMENSIONS

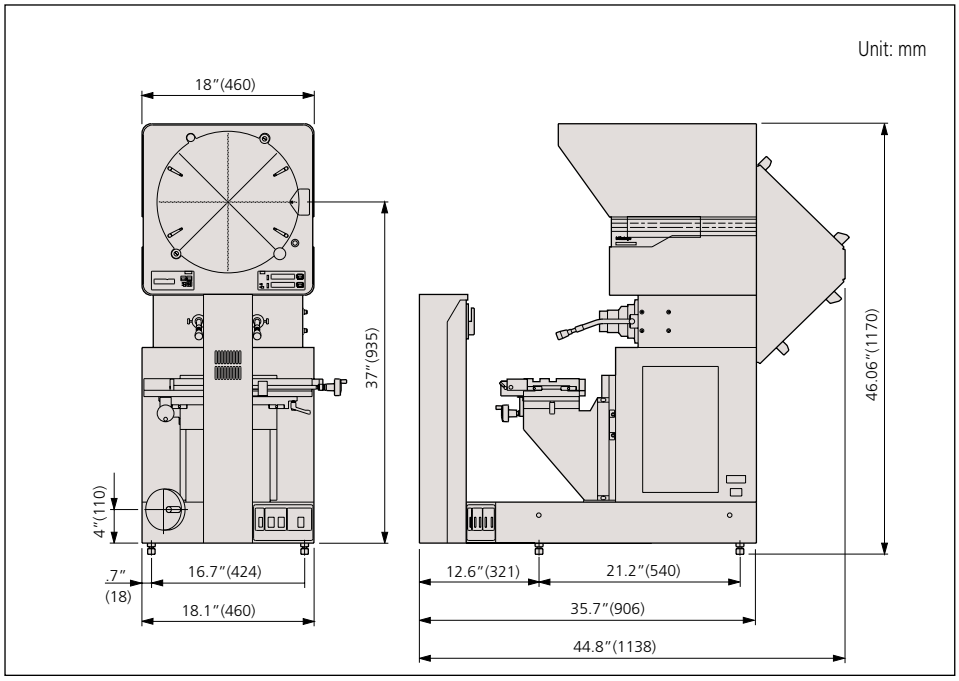

Profile Projectors

PJ-PLUS
SERIES 302 — Premium Benchtop Series

- Excellent durability and energy-saving performance thanks to the adoption of an"LED illumination source" and "fan-less cooling system".
- The measuring projector that "can be operated intuitively" even by inexperienced people and also has excellent durability and energy-saving performance thanks to the adoption of fan-less cooling system.
- Provides stable dimension and angle measurements in harsher environments, such as manufacturing and processing lines, than can be handled by conventional models.

LED (White)

No color change in projected image with changes in illumination intensity.

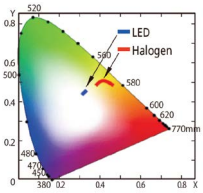

Color temperature varies significantly with the level of halogen illumination but not so much with LED illumination, so the appearance of the image varies a lot less as the LED level is adjusted. Also, the projected image under LED illumination is sharper and easier on the operator's eyes which contributes to a reduction in fatigue and more efficient inspection and measurement.

High visibility digital display

In addition to zero-setting and direction change, the data output of each counter value adopts the highly versatile RS-232C.
Resolution: 0.001 mm or 0.0001 in / 0.001 mm.

Stepless illumination adjustment

The conventional 2-step illumination adjustment has been changed to stepless control so the level of illumination can be precisely set to suit the surface texture and color of the workpiece.

LED Circular Illuminator for PJ-PLUS (Optional)

LED illumination light can emphasize the contrast of projected workpiece images, stereoscopic and sharp observation. Projected image can be observed at high color reproducibility; Low power consumption: 17.4W; and long operating life: 30,000 hours.

SPECIFICATIONS

Model No.	172-502A*
Compatible model	PJ-PLUS (Projection lens 10X and 20X
Illumination source	White LED
Power consumption	12 V / 17.4 W
LED life (reference)	30,000 H

* This optional accessory requires (**12AAX044**) and is compatibale with the PJ-PLUS 20x Objective

Example of attaching the LED circular illuminator on PJ-PLUS

PJ-Plus Objectives

Model No.	Description
172-296	Projection lens set, 10X magnification
172-297	Projection lens set, 20X magnification
172-298	Projection lens, 50X magnification
172-299	Projection lens, 100X magnification

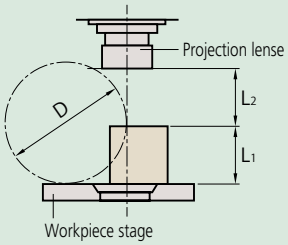

L1: Max. height where focusing is available
L2: Max. step where focusing is available (working distance)
D: Max. diameter when a cylinder image is projected on the center line of the screen

		Contour Illumination				Surface Illumination			
Magnification		10X	20X	50X	100X	10X	20X	50X	100X
View Field		31.5	15.7	6.3	3.1	31.5	15.7	6.3	3.1
Working distance	L_2	66	32.5	12.6	5	20	2	12.6	5
PJ-P1010A	L_1	91							
	D	182	87	27	10	182	61	27	10
PJ-P2010A	L_1	90.5							
	D	181	87	27	10	181	61	27	10

Oblique Reflection Mirror

This is used for observing low-reflectivity workpieces, such as plastic parts, and the surfaces of parts with high surface roughness.

172-229 (for 10X)

172-230 (for 20X)

Green Filter

(Improved contrast - less seceptible to ambient light)

172-160-3

Profile Projectors

2D Coordinate Interfacing RETROFITS

Model No.	Description
64PKA-M2-P	M2 Non-Edge Detection Unit with ASUS Touchscreen PC
64PKA-M2-PE	M2 with Edge Detection Unit & ASUS Touchscreen PC
264-161-13A-PJP	QM-DATA200 Arm Type (PJ-Plus)
264-161-13A-PJP-OPT	QM-DATA200 Arm Type & Optoeye Edge Detection (PJ-Plus)

Optional Accessories

172-116: Inspection tool, Standard scale 50 mm/0,1 mm
172-118: Inspection tool, Reading scale 200 mm/0,5 mm
172-119: Inspection tool, Reading scale 8”/0.02”
172-161: Inspection tool, Reading Scale 300 mm/0,5 mm
172-162 : Inspection tool, Reading Scale 12”/0.02”
172-160-3: Green Filter, Colour filter
172-604: Swivel center support, Fixture/clamping material
172-229: Lens accessory, Oblique reflecting mirror for 10X lens
172-230: Lens accessory, Oblique reflecting mirror for 20X lens
172-378: V-BLOCK, with clamp
176-107: Fixture/clamping material, Holder with clamp
172-604: Fixture/clamping material, Swivel center support
12AAE671: Attachment, OPTOEYE-200 Attachment A, 250-350 mm
332-161: Sensor, Optoeye-200 edge detection sensor
176-106: Rotary table
172-196: Rotary table, 100 mm for TM-1005B
172-198: Rotary table, 100 mm with fine feed knob for TM-1005B
172-502: LED Circular Illuminator (PJ-PLUS), for 10x and 20x + adapter 12AAX044
12AAX044: Damping Ring A (for PJ 20X), to connect LED illumination 172-502 to 20x lens

“Got Questions?

SPECIFICATIONS

Model No.		PJ-P101A	PJ-P2010A
Order No.		**302-801-10A**	**302-802-10A**
Unit system for Main Unit		mm/in	
Projected image		Inverted-reversed	
Protractor screen	Effective diameter	ø315 mm / 12.4 in	
	Screen rotation	±360° (±370° for display)	
	Angle display	Digital Counter (ABS/INC mode switching, Zero Set)	
	Resolution	1’ or 0.01’	
	Cross-hairs	90° (solid lines)	
Projection lens		Standard accessory: 10X, Optional accessories: 20X, 50X, 100X	
	Magnification	10 x 8 20x (Equipped with external half-mirror for coaxial surface illumination)	
	Lens Mounts	Bayonet Mount	
Magnification accuracy	Contour illumination	±0.1%	
	Surface illumination	±0.15%	
Contour illumination	Light source	White LED light source	
	Optical system	Telecentric system	
	Functions	Variable brightness adjustment	
Surface illumination (Optional accessories)	Light source	White LED light source	
	Optical system	Adjustable condenser lens (ensuring even lighting across entire FOV at specific magnification)	
Counter unit	Angle	Built-in Digital counter, range ±370°, resolution: 1’ or 0.01’ (switchable), zero set, ABS/INC switchable	
	XY Axis Resolution	.001mm/.0001”	
	Functions	Zero set (with buzzer function), Unit switching, Direction switching OPTOEYE input, External load signal input, RS-232C output	
	Edge Detection	OPTOEYE Retrofit Available (**264-161-13A-PJP-OPT**)	
	Measuring Unit	Digital Linear Scale	
	Measuring Range	100 x 100 mm / 4x4 in	200 x 100 mm / 8 x 4 in
System	Table Size	250 x 250 mm / 9.8 x 9.8 in	350 x 280 mm / 14 x 11 in
	Effective Table Area	142 x 142 mm / 5.6 x 5.6 in	250 x 150 mm / 9.8 x 5.6 in
	Max Workpiece Height	91 mm / 3.58 in	90.5 mm / 3.56 in
	Max Workload	10 kg / 22 lbs	8 kg / 17 lbs

DIMENSIONS

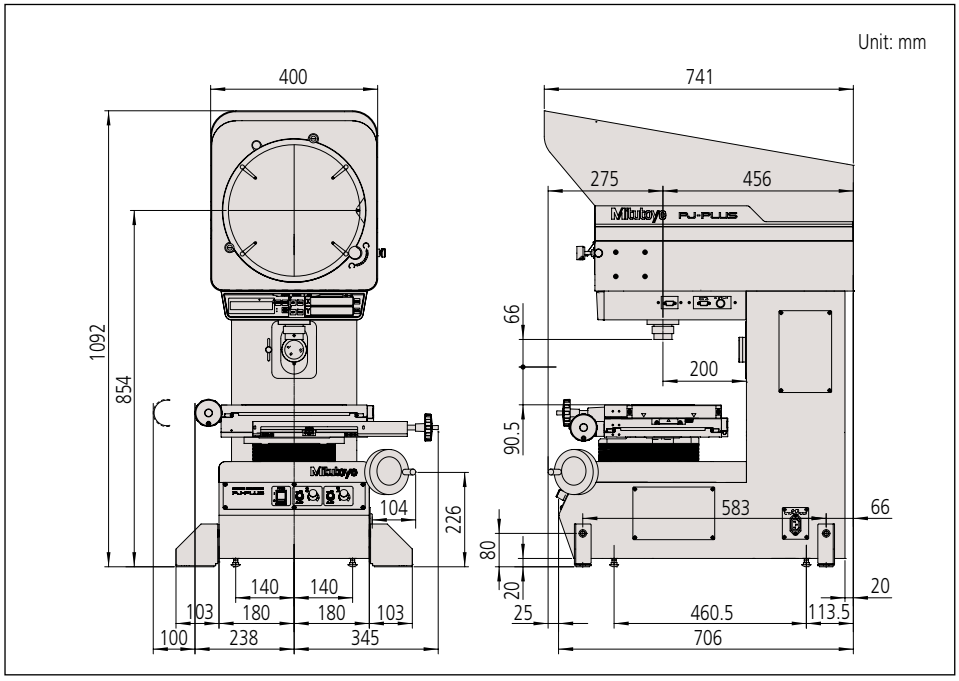

Profile Projectors

PJ-H30
SERIES 303 — High-Accuracy Profile Projectors

By separating axial motion and stabilizing the XY measuring table in the vertical direction, high measuring accuracy of (3+0.02L) µm has been achieved on the PJ-H30 Series Profile Projectors. Focusing is accomplished by moving the screen head itself up and down with the hand wheel or motorized unit. The power focusing (PJ-H30D type) provides higher performance.

- Newly designed optical system with high NA lenses provides drastically brighter and clearer screen images during surface illumination.
- The three-lens mounting turret includes a 10X lens as standard. Four types of projection lenses (5X, 20X, 50X, 100X) are available.

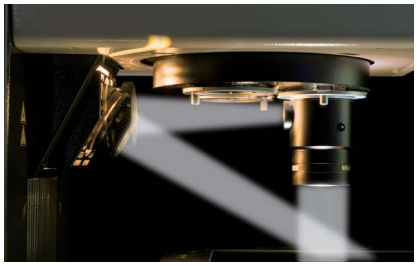

Switchable surface illumination: vertical or oblique

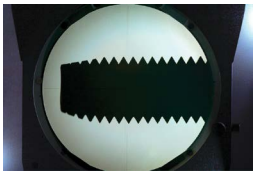

Contour illumination (Standard)

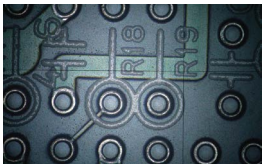

1. Vertical transmitted light illumination

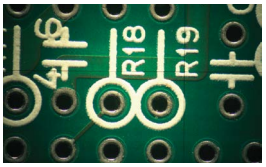

2. Oblique illumination
High color reproducibility

PJ-H30A3017B
XY stage travel range: 12x7" / 300x170mm

Projection Capacity

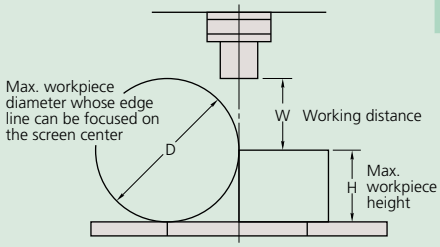

Unit: mm

Model No.	View Field (mm)	L_1 (mm)	L_2 (mm)	D (mm)
5X Lens **172-271**	61.2	105	66	148
10X Lens **172-472**	30.6	105	70.5	197
10X Lens with C-mount **172-500**	30.6	105	70.5	197
20X Lens **172-473**	15.3	105	56.5	137
50X Lens **172-474**	6.12	105	50	114
100X Lens **172-475**	3.06	105	50	114

10x C-Mount Camera Objective

Model No.	**172-500**
Camera Projected Image	Inverted
Camera Magnification	0.71X
Compatible Sensor Size	Four Thirds 4/3 type
Camera Mount	C Mount
Mountable Mass	0.9 kg or less

The projection lens is equipped with a C mount, therefore a compatible digital camera can be attached. Retrofitting is possible on a Profile Projector (PJ-H). A workpiece can be observed on the large-size projection screen, and the color image can be simultaneously saved on the camera and observed on the monitor.

All models equipped with Lens Turret

The turret of the PJ-H30 Series uses low-friction bearings that enable smooth and rapid rotary motion for changing magnification by bringing different projection lenses into the light path. The turret body uses bayonet mounts to aid quick attachment and detachment of lenses.

Quick-release mechanism

A quick-release handle inside the X/Y handle allows you to switch stage feed between extremely coarse and fine traverse movement.

2D Coordinate Interfacing RETROFITS

Model No.	Description
264-161-13A-PJH	QM-DATA200 Arm Type (PJ-H30
264-161-13A-PJH-OPT	QM-DATA200 Arm Type & Optoeye Edge Detection (PJ-H30)

Optional Accessories

172-271: 5X projection lens
172-472: 10X projection lens (standard accessory)
172-473: 20X projection lens
172-474: 50X projection lens
172-475: 100X projection lens
172-116: Standard scale (50mm)
172-117: Standard scale (2")
172-118: Reading scale (200mm)
172-161: Reading scale (300mm)
172-119: Reading scale (8")
172-162: Reading scale (12")
12AAG981: Green filter
172-370: Machine stand
512305: Halogen bulb (24V, 150W) (standard accessory)

Fixture and Stage Accessories

172-198: Rotary table (Effective diameter: 4" / 100mm)
176-305: Rotary table (Effective diameter: 7.2" / 183mm)
176-306: Rotary table (Effective diameter: 9.4" / 240mm)
172-604: Swivel center support (Max. workpiece dia.: 3.1" / 80mm)
176-107: Holder with clamp
172-378: V-block with clamp (Max. workpiece dia.: 1" / 25mm)
176-317: Fixture mount adapter C
176-304: Fixture mount adapter A

Availability	Models	
	PJ-H30A1010B	**PJ-H30A2017B**
	PJ-H30D1010B	**PJ-H30D2017B**
	PJ-H30A2010B	**PJ-H30A3017B**
	PJ-H30D2010B	**PJ-H30D3017B**
172-198	✔**	✔****
176-305	✔**	
176-306		✔****
176-107 *	✔**	✔****
172-378 *	✔**	✔****
172-604	✔***	✔***

* Able to attach to a Rotary table 172-198 or 176-305 (172-197 can only attach to 176-305).
** Fixture mount adapter C (176-317) is required.
*** Rotary table (172-198) is required.
**** Fixture mount adapter A (176-304) is required.

Manual Focus type	Model No.	**PJ-H30A1010B**	**PJ-H30A2010B**	**PJ-H30A2017B**	**PJ-H30A3017B**
	Order No.	**303-716-13A**	**303-717-13A**	**303-718-13A**	**303-719-13A**
Projected Image		Erect image			
Protractor screen	Effective diameter	12" / 306mm			
	Screen material	Fine ground glass			
	Reference line	Cross hair line			
	Screen rotation	±360°, fine feed and clamp			
	Angle display (LED)	Resolution: 1° or 0.01° (switchable), Range: ±370°, Functions: ABSOLUTE/incremental mode switching, Zero set			
Projection lens		Standard accessory: 10x (172-472), Optional accessories: 2X, 5X, 20X, 50X, 100X			
Lens mount		3-lenses mounting turret			
Magnification accuracy	Contour illumination	±0.1% or less			
	Surface illumination	±0.15% or less			
Contour illumination	Light source	Halogen bulb (24V 150W)			
	Optical system	Zoom telecentric system			
	Functions	Brightness adjustment, Heat-absorbing filter, Cooling fan			
Surface illumination	Light source	Halogen bulb (24V 150W)			
	Optical system	Vertical / Oblique illumination with an adjustable condenser lens			
	Functions	Non-stepped brightness adjustment, Heat-absorbing filter, Cooling fan			
	XY Range	4 x 4" 100 x 100mm	8 x 4" 200 x 100mm	8 x 6.7" 200 x 170mm	12 x 6.7" 300 x 170mm
	Resolution	.0001" / 0.001mm			
	Measuring unit	Built-in Linear scale			
	Table size	11.8 x 9.4" 300 x 240mm	13.8 x 11" 350 x 280mm	16.1 x 13.5" 410 x 342mm	20 x 13.5" 510 x 342mm
	Effective table area	7.1 x 5.9" 180 x 150mm	9.8 x 5.9" 250 x 150mm	10.6 x 9.4" 270 x 240mm	14.6 x 9.4" 370 x 240mm
	Max. workpiece ht.	4.1" / 105mm			
	Max. workpiece load	22lbs / 10kg	22lbs / 10kg	44 lbs / 20kg	44 lbs / 20kg
Power supply		120V AC, 50/60Hz			
Mass		391lbs / 176kg	396lbs / 178kg	556lbs / 205kg	471lbs / 212kg
Standard accessories		10X projection lens set, masking shield, power cord, halogen bulb, tube fuse, grounding wire, allen wrench, vinyl cover			

DIMENSIONS

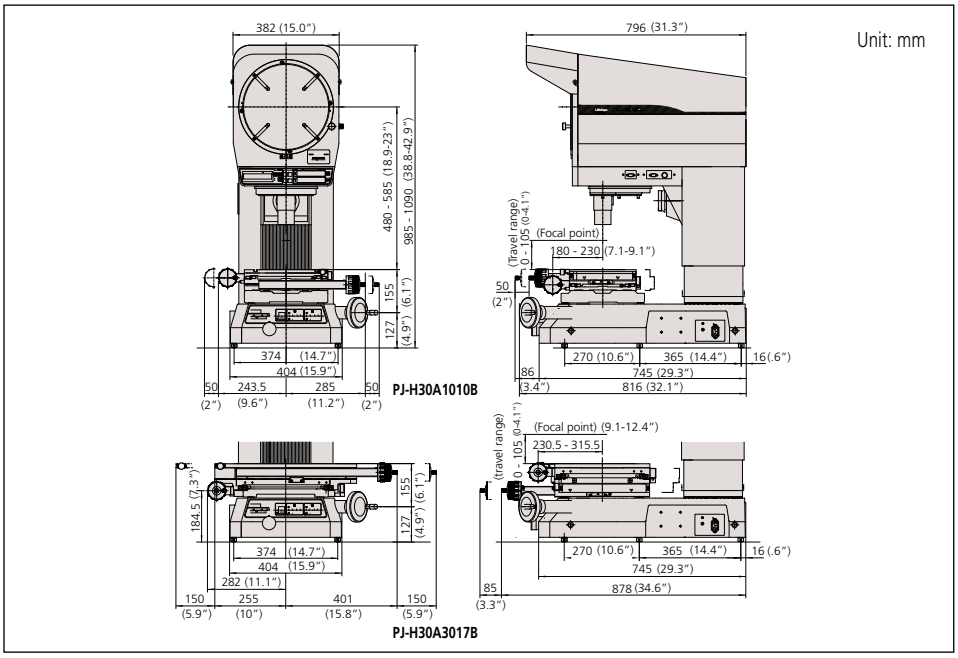

Profile Projectors

PV-5110
SERIES 304 — Profile Projectors

- Large 500mm screen
- Floor model uses a downward illumination system.
- Digital readout protractor screen (including zero-setting, ABS/INC coordinate switching functions) for easy and error-free angle measurement.
- Angled screen allows projected images to be easily traced or compared with a template.
- The oblique surface illumination system provides clear and bright images allowing easy inspection of non-reflective workpieces such as plastic parts or printed materials.

Upward Vertical Projector

The PV-5110 one of the only Upward Vertical Profile Projectors on the market. With its finely tuned optic to view through the bottom of the stage glass, this system is ideal for measuring parts which need to be supported such as rubbers or films. With only the illumination unit mounted overhead, this leaves operators with ample room to position their workpiece.

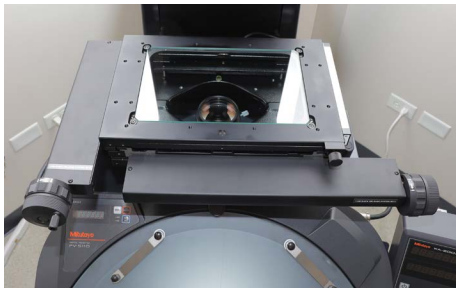

Surface Illumination Units (172-424)

PV-5110

Built-In Oblique Surface Illumination

In addition to traditional couture illumination, this system also offers built-in oblique surface illumination as a standard. Two illumination units (172-424) are placed to the side of the objective which provides bright, even lighting across the surface of the workpiece and stage. It is important to note that the objectives of this system have been finely tuned to measure surface features through the stage glass.

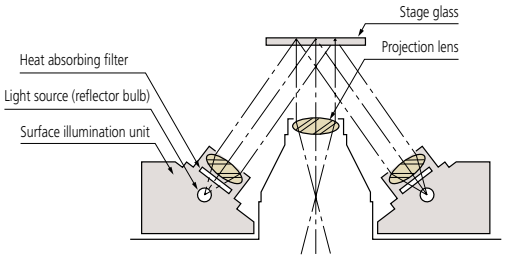

Projection Capacity

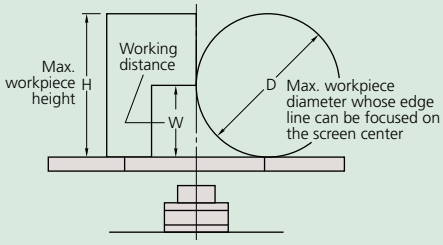

Unit: mm

	Magnification				
	5X	10X	20X	50X	100X
View field	ø101.6	ø50.8	ø25.4	ø10.16	ø5.08
H	125	181	206	87	87
W	60 (27)	60	60	32.4	22.5
D	120	120	120	64.8	45

( ): When using surface illumination

Talk to Sales

Profile Projectors

2D Coordinate Interfacing RETROFITS

Model No.	Description
264-161-13A	QM-DATA200 Arm Type (PJ-H30)
264-161-13A-PV-OPT	QM-DATA200 Arm Type & Optoeye Edge Detection (PV-5110)

KA Counter (174-183A)
(Refer to page H-7 for more details.)

Optional Accessories

172-401: 5X projection lens set
172-406: 5X projection lens
172-402: 10X projection lens set (standard accessory)
172-409: 10X projection lens
172-403: 20X projection lens set
172-411: 20X projection lens
172-404: 50X projection lens set
172-413: 50X projection lens
172-405: 100X projection lens set
172-415: 100X projection lens
172-424: Surface illumination unit (standard accessory)
172-116: Standard scale (50mm)
172-117: Standard scale (2")
172-118: Standard scale (200mm)
172-119: Standard scale (8")
172-161: Reading scale (300mm)
172-329: Reading scale (600mm)
172-162: Reading scale (12")
172-160-2: Green filter (standard accessory)
172-319: Canopy
512305: Halogen bulb (24V, 150W) (standard accessory)

Fixture and Stage Accessories

172-196: Rotary table* (Effective diameter: 4" / 100mm)
172-198: Rotary table with fine feed wheel* (Effective diameter: 4" / 100mm)
172-604: Swivel center support* (Max. workpiece dia.: 3.1" / 80mm)
176-107: Holder with clamp*
172-378: V-block with clamp* (Max. workpiece dia.: 1" / 25mm)
*Stage adapter C (**176-317**) is required.

SPECIFICATIONS

Model No.		PV-5110
Order No.		**304-919-11A***
Projected image		Invert image
Protractor screen	Effective diameter	20" / 508mm
	Screen material	Fine ground glass
	Reference line	Cross hair line
	Screen rotation	±360°, fine feed and clamp
	Angle display (LED)	Resolution: 1' or 0.01°(switchable), Range: ±370°, Functions: ABSOLUTE/incremental mode switching, Zero set
Projection lens		Standard accessory: 10x(172-472), Optional accessories: 5X, 20X, 50X, 100X
Magnification accuracy	Contour illumination	±0.1% or less
	Surface illumination	±0.15% or less
Contour illumination	Light source	Halogen bulb (24V 150W)
	Optical system	Telecentric system
	Functions	2-step brightness switch, Heat-absorbing filter, Cooling fan
Surface illumination	Light source	Halogen bulb (24V 150W)
	Optical system	Vertical illumination
	Functions	Adjustable condenser lens. Oblique illumination (for 5X, 10X, and 20X), 2-step brightness switch, Heat-absorbing filter, Cooling fan
	XY Range	8 x 4" / 200 x 100mm
	Resolution	.0001" / 0.001mm*
	Measuring unit	Built-in Linear scale
	Table size	15 x 9.8" / 380 x 250mm
	Effective table area	10.5 x 6.7" / 266 x 170mm
	Max. workpiece height	See (H) on page I-9
	Max. workpiece load	17.6lbs / 8kg
Power supply		120V AC, 50/60Hz
Mass		467lbs / 210kg
Standard accessories		200x100mm (8" x 4") stage, 10X projection lens set, Surface illumination unit. Counter stand for KA counter, power cord, halogen bulb, fuse, grounding wire, allen wrench

* Counter not included

DIMENSIONS

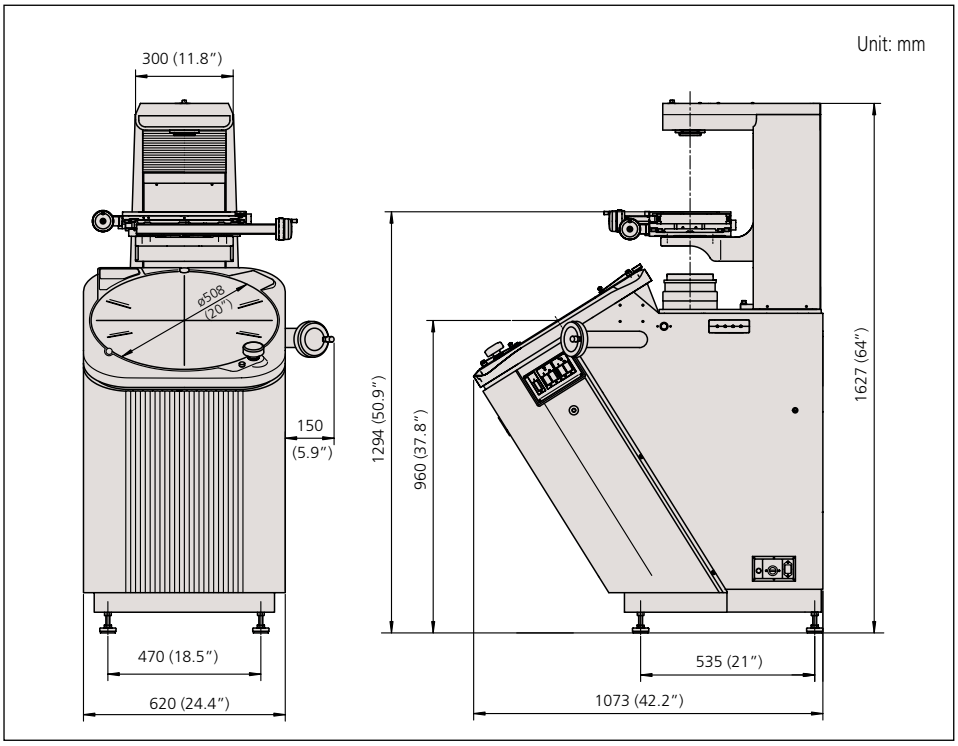

Accessories for Profile Projectors

SERIES 172 — Profile Projector

Standard Scales

172-116

- Used for checking magnification accuracy.

SPECIFICATIONS

Inch

Graduation	Range	Order No.	Accuracy (20°C)*
0.1″	2″	**172-117**	.00013″

Metric

Graduation	Range	Order No.	Accuracy (20°C)*
0.1mm	50mm	**172-116**	(3+5L/1000)µm
0.1mm	80mm	**172-330**	(3+5L/1000)µm

Rotary Tables

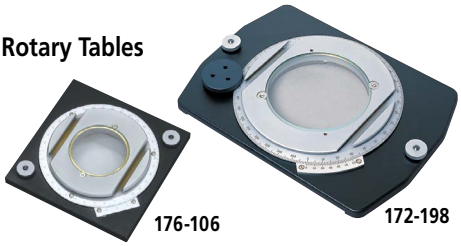

176-106 172-198

SPECIFICATIONS

Order No.	176-106	172-198
Effective glass dia.	66mm	100mm
Angle reading	6′	2′ (w/ fine adjustment)
Mass	1.7kg	2.5kg

Note: Holder with clamp (**176-107**) can be mounted.

Swivel Center Supports

172-604

SPECIFICATIONS

Order No.	172-604
Max. workpiece dia.	80mm (65mm)*
Max. workpiece length	140mm
Swivel range	±10°
Mass	2.5kg

*When swiveled 10°

172-603

V-Block with Clamp

SPECIFICATIONS

Order No.	172-603
Max. workpiece dia.	50mm
Width of block	60mm
Mass	1.24kg

Reading Scales

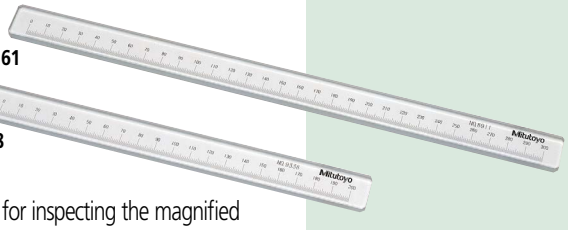

172-161

172-118

- Specially designed for inspecting the magnified image of a standard scale on the projection screen.

SPECIFICATIONS

Inch

Graduation	Range	Order No.	Accuracy (20°C)*
0.01″	8″	**172-119**	.00071″
0.02″	12″	**172-162**	.00077″

Metric

Graduation	Range	Order No.	Accuracy (20°C)*
0.5mm	200mm	**172-118**	18µm (15+15L/1000)µm
0.5mm	300mm	**172-161**	19.5µm (15+15L/1000)µm
0.5mm	600mm	**172-329**	24µm (15+15L/1000)µm

Holder with Clamp

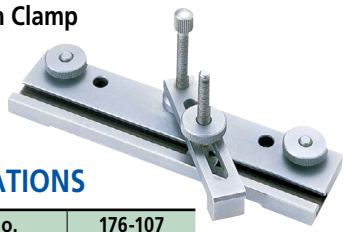

176-107

SPECIFICATIONS

Order No.	176-107
Max. workpiece height	35mm
Mass	0.42kg

Center Support

172-600 172-601

SPECIFICATIONS

Order No.	172-600
Max. workpiece height	120mm (240mm)*
Mass	3.3kg

*When using a center support riser (**172-601**)

Rotary Vise

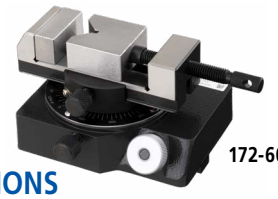

172-602

SPECIFICATIONS

Order No.	172-602
Max. workpiece height	60mm
Width of jaw	40mm
Angle reading	5°
Mass	2.5kg

Need Repair?

Vertical Holder

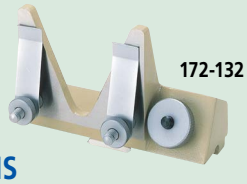

172-132

SPECIFICATIONS

Order No.	172-132
Mass	1.3kg

QM-Data Interface Unit

for Profile Projectors

The QM-Data200 is a geometric readout/analysis unit for optical instruments such as profile projectors. This unit features powerful 2-D coordinate measurement capabilities with easy-to-use key operation. Measurement results can be visualized on the LCD display and printed out if required.

2-D Data Processing Unit QM-Data200

Operation screen (Counter)

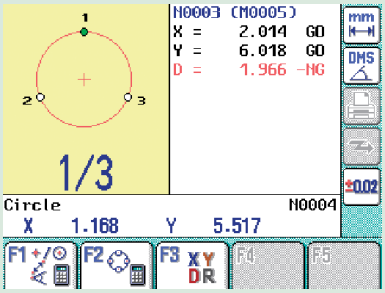

OPTOEYE 200 (Automatic Edge Detection)

PJ-H30 with OPTOEYE 200

OPTOEYE 200 and detector mounting plate A

Model No.	OPT-200
Order No.	**332-161**
Illumination	Contour/ surface*1
Detecting directivity	Non-directional
Minimum detectable circle	ø2 mm
Minimum detectable line width	1 mm
Maximum response speed	4.5 mm/s (10 X lens)
Illumination range (Bright)	30 to 2000l
Bright-Dark field difference	20 lX or higher
Repeatability (contour illumination)	σ=1 μm*2

*1, *2 Mitutoyo's test conditions.

Basic Element Measurement

Point
Coordinates (multi-point processing for a maximum of 100 points)
Note: In multi-point processing, the mean value is used as the measured value.

Line
Angle and perpendicularity with the X-axis. (multi-point processing for a maximum of 100 points)

Circle
Center coordinates, diameter, roundness (multi-point processing for a maximum of 100 points)

Point-point distance
Distance, coordinates difference, radial difference

Ellipse
Center coordinates, major-axis diameter, minor-axis diameter, angle with the X-axis, departure from the X-axis (multi-point processing for a maximum of 100 points)

Rectangular Hole
Center coordinates, length, width

Slotted Hole
Center coordinates, length, width, radius of slotted hole

Intersection Point & Intersecting Angle
Intersection coordinates, intersecting angle, supplementary angle

Pattern Measurement

Pitch
Point-point distance, difference between coordinates, angle, cumulative distance, cumulative angle

Linear-point Distance
Perpendicular (shortest) distance

Line-circle distance
Center-center distance, longest distance, shortest distance

Circle-circle distance
Center-center distance, longest distance, shortest distance, difference between coordinates, radial difference

SPECIFICATIONS

Model No.	QM-Data200	
Order No.	**Stand-mount type**	**Arm-mount type**
	264-160-13A	**264-161-13A**
Display languages (selectable)	Japanese/English/German/French/Italian/Spanish/Portuguese/Czech/ Chinese(simplified/ traditional)/Korean/Turkish/Swedish/Polish/Dutch/Hungarian	
Measured value unit	Length: mm Angle: degree/degree minute second (selectable)	
Resolution	0.1 μm	
Program functions	Part program creation, execution, editing	
Statistical processing	Number of data, maximum value, minimum value, mean value, standard deviation, range, histogram, statistics on a measuring function basis (by command)	
Display system	COLOR TFT LCD (with LED backlight)	
Edge Sensor Position Compensation	Supported (Projector)	
Input /Output	XYZ: Maximum of three Linear Scales RS-232C 1: For connecting to external PC RS-232C 2: For connecting to counter of measuring instrument OPTOEYE: For inputting edge signal from OPTOEYE (OPTOEYE 200) FS: For connecting to optional foot switch PRINTER: For connecting to optional printer USB-MEMORY : For connecting to USB memory	
Measurement result file output	RS-232C output (CSV format, MUX-10 format)	
Power	100 to 240 V AC	
Maximum power consumption	17 W (does not include optional accessories)	
External dimensions (W×D×H)	Approximately 260×242×310 mm (including the stand)	Approximately 318×153×275 mm (when the arm is in the horizontal posture)
Surface illumination	Halogen bulb (24V 150W)	
Mass	Approximately 2.9 kg	Approximately 2.8 kg
Applicable models	PJ-PLUS Series PJ-H30 Series PV-5110 PH-3515F	PJ-PLUS Series PJ-H30 Series PV-5110*1 PH-3515F*1
Optional accessories	AC adapter, power cable, Easy operation guide	

*1 The arm-mount type cannot be used concurrently with a counter stand.
Note: For details, refer to the QM-Data200 and Vision Unit brochure.

M2 User Interface

For PH-3515F & PJ-Plus Systems

2-D Coordinate Measurement M2 Hardware & Software Add-on

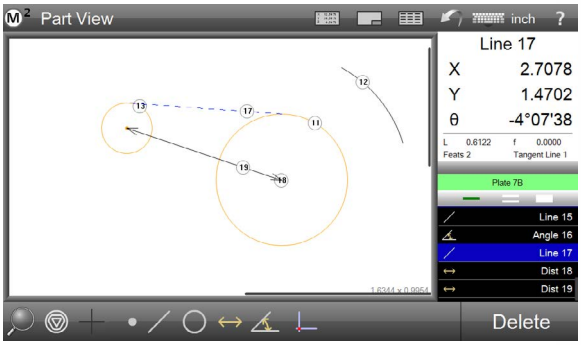

Graphics-based "Part View"constructions

Generate popular construction types, like distances and tangent lines, from within the graphical part view.

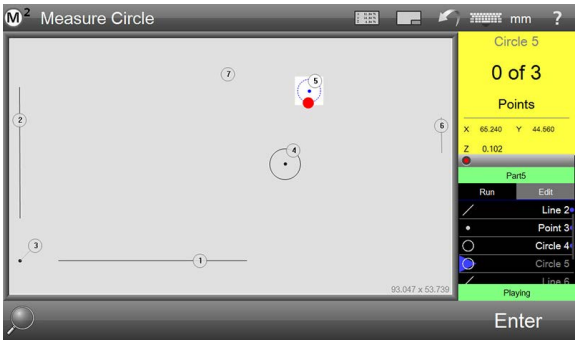

Intuitive "Part Playback" / Programmability

Save your most common part files to be used in playback mode where M2 software will guide you through your predefined procedures to accurately and efficiently inspect your parts.

PH-3515F w/ M2 Software & All-in-One Touchscreen PC **172-868-11A-M2**

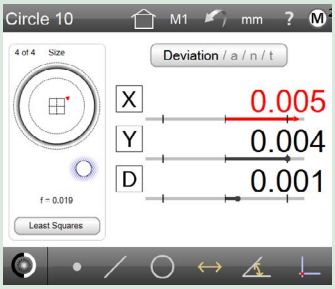

Geometric tolerancing

Measure features, set nominals, apply tolerances and view deviation results with only a few quick clicks.

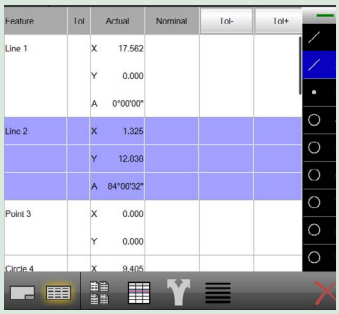

Reports

Flexibility for report contents and formatting allows for full customization of the data format, header information, and header and footer graphics.

Machine & M2 Retrofit Kits Packages

PH-3515F	
172-868-11A-M2	PH-3515F Profile Projector with M2 Hardware/Software and All-in-One Touchscreen Tablet
172-868-11A-M2-EDGE	PH-3515F Profile Projector with M2 Hardware/Software and Touchscreen PC - Automatic EDGE Detection (included)

PJ-PLUS	
302-801-10A-M2	PJ-PLUS 4X4 STAGE - with M2 Hardware/Software and All-in-One Touchscreen Tablet
302-801-10A-M2-EDGE	PJ-PLUS 4X4 STAGE - with M2 Hardware/Software and Touchscreen PC - Automatic EDGE Detection (included)
302-802-10A-M2	PJ-PLUS 8X4 STAGE - with M2 Hardware/Software and All-in-One Touchscreen Tablet
302-802-10A-M2-EDGE	PJ-PLUS 8X4 STAGE - with M2 Hardware/Software and Touchscreen PC - Automatic EDGE Detection (included)

Retrofits

Retrofit Kits	
64PKA-M2-P	RETROFIT KIT - WITH M2 Hardware/ Software and All-in-One Touchscreen Tablet
64PKA-M2-PE	RETROFIT KIT - M2 Hardware/Software and Touchscreen PC - Automatic EDGE Detection (included)

Where to Buy

Kitted Machine & Interface Packages

All-In-One Packages were created for the convenience of our valued customers. These packages help expedite the ordering process as well as ensure all necessary accessories for each of our modular interfacing options.

Model	Interface/DRO	XY Range	Standard Objective	**Package Order No.**	Package Description
PH-3515F	KA Counter	254x152mm	10x	**172-868-11A-KA**	PH-3515F Profile Projector - KA Counter & Tray (Included)
	QM-Data 200	254x152mm	10x	**172-868-11A-QM**	PH-3515F Profile Projector - QM-DATA-200 Arm Type (Included)
	QM-Data 200 & OPTOEYE	254x152mm	10x	**172-868-11A-QM-OPT**	PH-3515F Profile Projector - QM-DATA-200 Arm Type & OPTOEYE (Included)
	M2	254x152mm	10x	**172-868-11A-M2**	PH-3515F Profile Projector - M2 Add-on & Touchscreen PC (Included)
	M2 & AUTO EDGE	254x152mm	10x	**172-868-11A-M2-EDGE**	PH-3515F Profile Projector - M2 Add-on, Touchscreen PC & Automatic EDGE Detection (Included)

Model	Interface/DRO	XY Range	Standard Objective	**Package Order No.**	Package Description
PJ-PLUS	M2	100x100mm	10x	**302-801-10A-M2**	PJ-P1010A Profile Projector - M2 Add-on & Touchscreen PC (Included)
	M2 & AUTO EDGE	100x100mm	10x	**302-801-10A-M2-EDGE**	PJ-P1010A Profile Projector - M2 Add-on, Touchscreen PC & Automatic EDGE Detection (Included)
	M2	200x100mm	10x	**302-802-10A-M2**	PJ-P2010A Profile Projector - M2 Add-on & Touchscreen PC (Included)
	M2 & AUTO EDGE	200x100mm	10x	**302-802-10A-M2-EDGE**	PJ-P2010A Profile Projector - M2 Add-on, Touchscreen PC & Automatic EDGE Detection (Included)

Model	Interface/DRO	XY Range	Standard Objective	**Package Order No.**	Package Description
PV-5110	KA Counter	200x100mm	10x	**304-919-11A-KA**	PV-5110 Profile Projector - KA Counter & Tray (Included)
	QM-Data 200	200x100mm	10x	**304-919-11A-QM**	PV-5110 Profile Projector - QM-DATA-200 Arm Type (Included)
	QM-Data 200 & OPTOEYE	200x100mm	10x	**304-919-11A-QM-OPT**	PV-5110 Profile Projector - QM-DATA-200 Arm Type & OPTOEYE (Included)

QM Data Retrofit Packages

Model	Package Type	**Package Order No.**	Package Description
PH-3515F & PV-5110	KA Counter	**264-161-13A**	QM-DATA200 Arm Type
PJ-H30 Series	QM-DATA 200 Retrofit	**264-161-13A-PJH**	QM-DATA200 Arm Type (PJ-H30)
	QM-DATA 200 & OPTOEYE Retrofit	**264-161-13A-PJH-OPT**	QM-DATA200 Arm Type & OPTOEYE (PJ-H30)
PJ-PLUS Series	QM-DATA 200 Retrofit	**264-161-13A-PJP**	QM-DATA200 Arm Type (PJ-PLUS)
	QM-DATA 200 & OPTOEYE Retrofit	**264-161-13A-PJP-OPT**	QM-DATA200 Arm Type & OPTOEYE (PJ-PLUS)

*Retrofits do not include main unit please reference page 16 for main unit model numbers.

Overlay Chart Set

- Makes inspection of projected images an easy process.
- Twelve different patterns are available in the set.
- Designed for use with profile projectors whose screen diameter is 300mm or larger.

Overlay chart set (12 sheets)
Order No.: 12AAM027

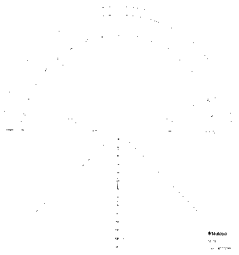

12AAM587
Protractor (1°-grad. radial index) and radius (1mm-radius increment concentric semicircles)

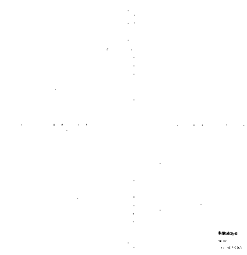

12AAM588
Radius (0.1cm-reading scales and 5mm-radius increment concentric circles)

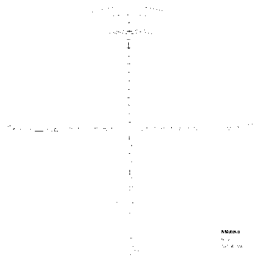

12AAM589
Radius (1X, 10X, 20X, 50X)

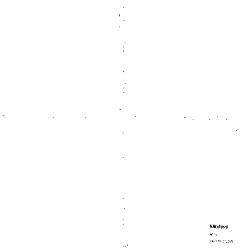

12AAM590
1mm-reading scales (20X, 50X)

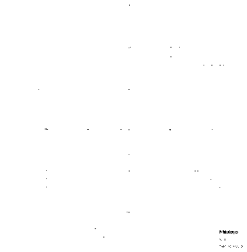

12AAM591
10x10mm sections

12AAM592
0.5mm-reading scales

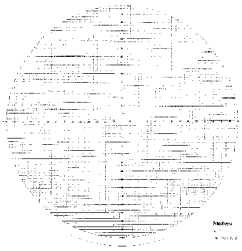

12AAM593
1x1mm sections

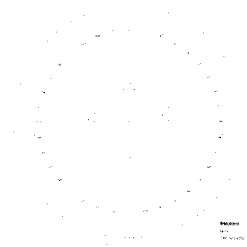

12AAM594
Protractor (1°-grad. diametral index)

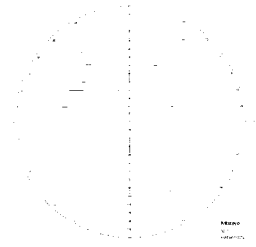

12AAM595
1mm-reading vertical scale

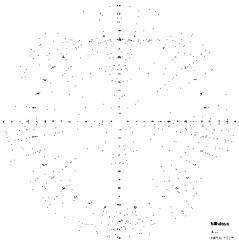

12AAM596
Protractor (1°-grad. diametral index) and radius (1mm-radius increment concentric circles)

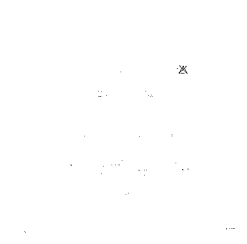

12AAM597
Metric, Unified, and Whitworth screw threads (20X)

12AAM598
Metric screw thread (100X) and 20° and 14.5° gear teeth (20X)

Get a Quote

Quick Guide to Precision Measuring Instruments

Erect Image and Inverted Image

An image of an object projected onto a screen is erect if it is orientated the same way as the object on the stage. If the image is reversed top to bottom, left to right and by movement with respect to the object on the stage (as shown in the figure below) it is referred to as an inverted image (also known as a reversed).

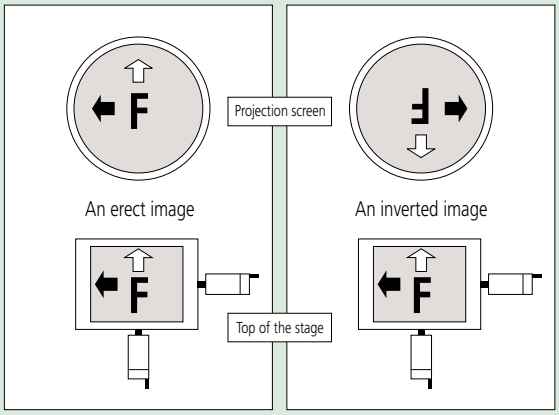

F Workpiece
X-axis movement
Y-axis movement

Magnification Accuracy

The magnification accuracy of a projector when using a certain lens is established by projecting an image of a reference object and comparing the size of the image of this object, as measured on the screen, with the expected size (calculated from the lens magnification, as marked) to produce a percentage magnification accuracy figure, as illustrated below. The reference object is often in the form of a small, graduated glass scale called a `stage micrometer' or `standard scale', and the projected image of this is measured with a larger glass scale known as a `reading scale'.

(Note that magnification accuracy is not the same as measuring accuracy.)

$$\Delta M(\%) = \frac{L - \ell M}{\ell M} \times 100$$

ΔM(%): Magnification accuracy expressed as a percentage of the nominal lens magnification
L : Length of the projected image of the reference object measured on the screen
ℓ : Length of the reference object
M : Magnification of the projection lens

Type of Illumination

- Contour illumination: An illumination method to observe a workpiece by transmitted light and is used mainly for measuring the magnified contour image of a workpiece.
- Coaxial surface illumination: An illumination method whereby a workpiece is illuminated by light transmitted coaxially to the lens for the observation/measurement of the surface. (A half-mirror or a projection lens with a built-in half-mirror is needed.)
- Oblique surface illumination: A method of illumination by obliquely illuminating the workpiece surface. This method provides an image of enhanced contrast, allowing it to be observed three-dimensionally and clearly. However, note that an error is apt to occur in dimensional measurement with this method of illumination.
  (An oblique mirror is needed. Models in the PJ-H30 series are supplied with an oblique mirror.)

Profile Projectors

Telecentric Optical System

An optical system based on the principle that the primary ray is aligned parallel to the optical axis by placing a lens stop on the focal point on the image side. Its functional feature is that the image will not vary in size even though the image blurs as the object is shifted along the optical axis.
For measuring projectors and measuring microscopes, an identical effect is obtained by placing a lamp filament at the focal point of a condenser lens instead of a lens stop so that the object is illuminated with parallel beams. (See the figure below.)

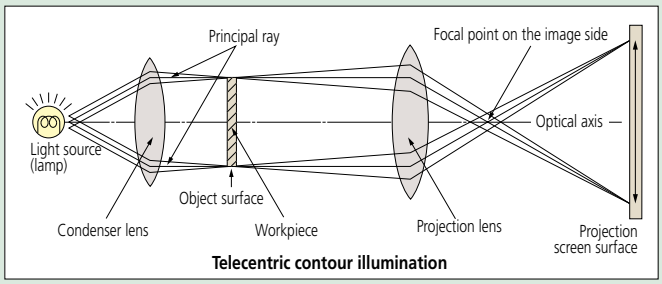

Telecentric contour illumination

Working distance

Refers to the distance from the face of the projection lens to the surface of a workpiece in focus. It is represented by L in the diagram below.

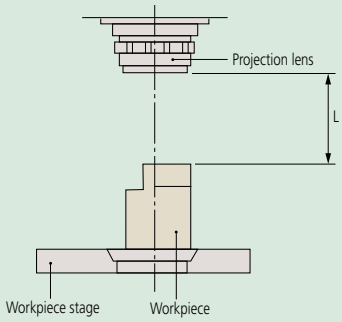

Parallax error

This is the displacement of an object against a fixed background caused by a change in the observer's position and a finite separation of the object and background planes.

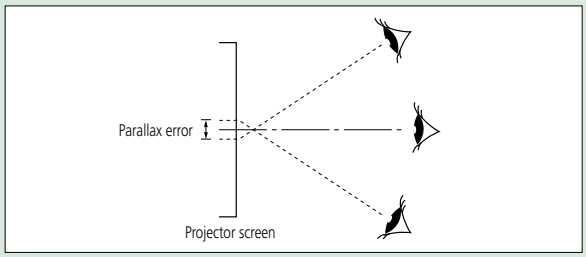

Field of view diameter

The maximum diameter of the workpiece that can be projected using a particular lens.

$$\text{Field of view diameter (mm)} = \frac{\text{Screen diameter of profile projector}}{\text{Magnification of projection lens used}}$$

Example: If a 5X magnification lens is used for a projector with a screen of ø500mm:
Field of view diameter is given by $\frac{500\text{mm}}{5} = 100\text{mm}$

Microscopes

TM-505B/1005B
SERIES 176 — Toolmakers' Microscopes

The Mitutoyo TM Series is a toolmakers' microscope well suited for measuring dimensions and angles of machined metals. It also can be used to check the shape of screws and gears by attaching an optional reticle. The compact body makes it ideal for use on shop floors with limited space.

- Angle measurement is performed easily by turning the angle scale disc to align the cross-hair reticle with the workpiece image.
- Illumination intensity can be adjusted.
- Included standard accessories create an overall magnification of 30X. Magnifications can be changed from 20 - 200X by using optional objectives and/or eyepieces.

TM-A505B

SPECIFICATIONS

Model No.		TM-505B	TM-A505B	TM-1005B	TM-A1005B
Order No.		**176-818-11A**	**176-820-11A**	**176-819-11A**	**176-821-11A**
Objective lens		Standard accessory: 2X, Options: 5X, 10X			
Microscope head	Maximum height of workpiece	4.53" / 115mm		4.21" / 107mm	
Illumination unit	Transmitted illumination	Stepless brightness adjustment, White LED light source, With green filter			
	Surface illumination	Oblique single-source type, Stepless brightness adjustment, White LED light source			
Cross-travel stage	Measuring range	2" x 2" / 50×50mm		4" x 2" / 100×50mm (An optional 2"/50mm gage block is required to cover full range. A CERA block is recommended.)	
	Table size	6" x 6" / 152×152mm		9.44" x 6" / 240×152mm	
	Usable area of the stage glass	3.8" x 3.8" / 96×96mm		6" x 3.8" / 154×96mm	
Linear measurement method		Micrometer heads optional	Micrometer heads included **(164-164)**	Micrometer heads optional	Micrometer heads included **(164-164)**
Resolution		N/A	.00005"/1µm	N/A	.00005"/1µm
Micrometer head travel range		N/A	2"/50mm	N/A	2"/50mm

DIMENSIONS

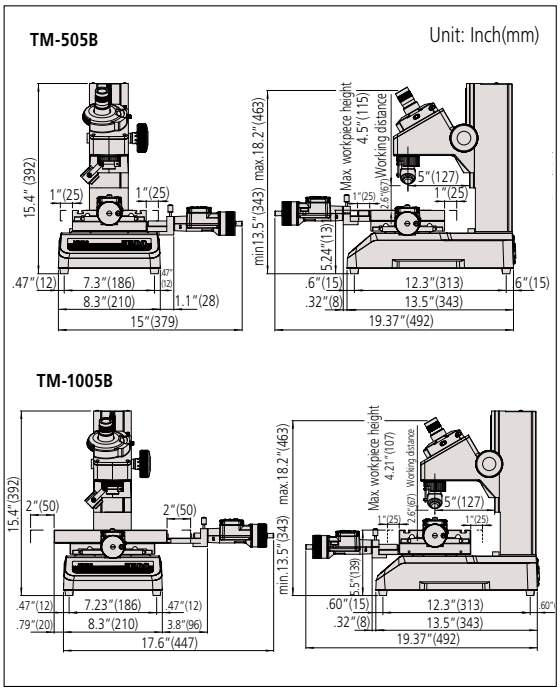

Technical Data

Optical tube	• Monocular with 30° depression angle • 90° broken cross-hair reticle (176-126) • Erect image • Diopter adjustable
Eyepiece protractor	• Graduation: 1° • Protractor range: 360° • Minimum reading by vernier: 6'
Eyepiece (176-116)	• Magnification: 15X • Field number: 13
Objective (176-138)	• Magnification: 2X • Working distance: 2.638" (67mm) • Numerical aperture: 0.07
Total magnification	• 30X
Transmitted illumination	• 3W LED • GIF (green) filter • Stepless intensity adjustment
Reflected illumination	• 3W LED • Stepless intensity adjustment • Adjustable position
Power supply	120 V AC, 50/60Hz
Power consumption	4.2W
Mass	TM-505B: Approx. 30.8 lbs. (14kg) TM-1005B: Approx. 33 lbs. (15kg)

Optional Accessories

176-115: 10X eyepiece (field number: 13mm)
176-116: 15X projection lens set (standard accessory)
176-117: 20X eyepiece (field number: 10mm)
176-138: Objective, 2X (W.D. 67mm, N.A. 0.07) (standard accessory)
176-139: Objective, 5X (W.D.: 33mm, N.A.: 0.10)
176-137: Objective, 10X (W.D.: 14mm, N.A.: 0.14)
164-164: Digimatic micrometer head (range: 2"/50mm, reading: .00005"/0.001mm)
152-390: Micrometer head for X-axis (range: 25mm, reading: 0.005mm)
152-389: Micrometer head for Y-axis (range: 25mm, reading: 0.005mm)
611201-531: Rectangular gage block (1")
611202-531: Rectangular gage block (2")
176-204: Dial indicator attachment for Z-axis measurement
959149: SPC cable (2m) for Digimatic micrometer head

Fixture and Stage Accessories

176-106: Rotary table for TM-505B (effective dia.: 66mm)
172-196: Rotary table for TM-1005B (effective dia.: 100mm)
172-604: Swivel center support for TM-1005B (max. workpiece dia.: 3.1" / 80mm)
172-378: V-block with clamp (max. workpiece dia.: 1" / 25mm)
176-107: Holder with clamp

Illumination Units

64AAB214: LED variable ring light
176-208A: LED circular illumination

Reticles

176-126: Broken cross-hair (90°) (standard accessory)
176-111: Concentric circles (up to ø4mm, 0.05mm increment)
176-135: Concentric circle (up to ø.2", .01" increment)
176-114: 60° angle

Protractor eyepiece

LED ring light 64AAB214

Part Number	Description	Sensor Size
64PMI247	MOTICAM S1, 1.2 MEGAPIXEL, 1280x960, USB	1/3"
64PMI249	MOTICAM S3, 3 MEGAPIXEL, 2048 X 1536 PIXELS, USB	1/2.8"
64PMI248	MOTICAM S6, 6 MP, 3072x2048 PIXELS, USB	1/1.8"
64PMI309	MOTICAM BMH4000X, 8 MP HDMI/USB	1/2.8"
64PMI310	MOTICAM BMH4000X, 8 MEGAPIXEL, HDMI / USB, LCD SCREEN	
63AAA060	0.37x C Mount Adapter (TM - Camera Adapter)*1	

*1 Required Item if utilizing C-Mount Camera

Technical Data

Optical tube	• Monocular or Binocular **(Must Choose)** • 25° depression angle • 90° broken cross-hair reticle (12AAG836) • Erect image • TV Mount 50/50
Observation image	• Erect Image
Observation type	• Bright Field
Eyepiece lens	• 10x (Included w/Tube) • 15x (Optional) • 20x (Optional)
Objective	• Magnification: 3X (Included) • W.D.: 3.03" (77mm); N.A.: .09 • Optional: 1x, 5x, 10x, 20x, 50x, 100x
Light source	• Halogen or LED **(Must Choose)** • Adjustable aperture diaphragms • Light intensity infinitely adjustable
Transmitted illumination	• Telecentric illumination
Reflected illumination	• Koehler illumination
Display Unit	
Number of axis	• 2 axes (MF-A Type) or 3 axes (MF-B Type)
Resolution	• 0.0001" / 0.00005" / 0.00001" (0.001 mm / 0.0005 mm / 0.0001 mm)
Functions	•Data output, Axis linear compensation, Metric or English Units, and more
Stage	• Precision travel (2.2+0.02L)µm accuracy • High-accuracy linear glass scales • Quick-release floating mode • Zero-set button
Power consumption	45W LED, 160W Halogen, 120V AC, 50/60 Hz
Mass	• 1010D - 148 lbs. / 67 kg • 2010D - 157 lbs. / 71 kg • 2017D - 326 lbs. / 148 kg • 3017D - 344 lbs./ 156 kg • 4020D - 357 lbs. / 162 kg

LED and Halogen Light Options for Transmitted and Reflected Illumination

(Common to MF D and MF-U D)

LED illumination

Halogen illumination

Available Optical Tubes

(Common to MF D and MF-U D)

Monocular Tube - **176-392**

Binocular Tube - **176-394**

MF
SERIES 176 — Measuring Microscopes

The MF measuring microscopes can be combined with a Mitutoyo vision unit to boost its performance and data management on a PC, further improving measuring efficiency and productivity.

- Observation with a crisp and high-resolution erect image and a wide field of view
- Measuring accuracy that is highest in its class (and conforms to JIS B 7153)
- ML series, high-NA objectives are specially designed for the MF series (long working distance type)
- Illumination unit (reflected/transmitted) selectable from a high-intensity LED or halogen bulb (selection required)
- Variable aperture diaphragm (reflected/transmitted) allows observation measurement while suppressing light diffraction
- Variety of standardized stages in sizes up to 400×200mm
- Quick-release mechanism useful for moving the stage quickly when measuring workpieces that are large in size or quantity
- Coarse/fine feed handles equipped as standard on both sides allow precise focus and observation measurement regardless of handedness
- High-magnification eyepiece observation up to 2000X
- Standard measuring microscope has a wide variety of optional accessories including a vision unit and various digital CCD cameras

MF-B2017D
XY stage travel range: 8 x 6.6" / 200 x 170mm
(with optional binocular tube)

Using optional slide-type nosepiece with 2-lens mount (factory set option)

Selection of XY stage by travel range

1010D: 4 x 4" / 100 x 100mm

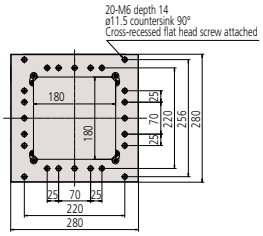

2010D: 8 x 4" / 200 x 100mm

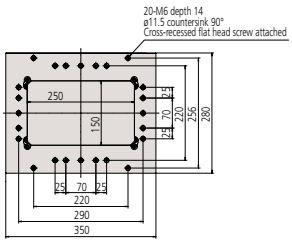

2017D: 8 x 6.7" / 200 x 170mm

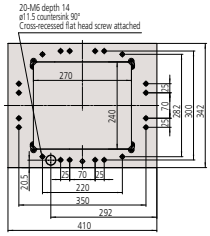

3017D: 12 x 6.6" / 300 x 170mm

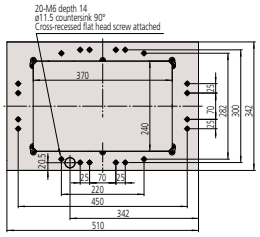

4020D: 16 x 8" / 400 x 200mm

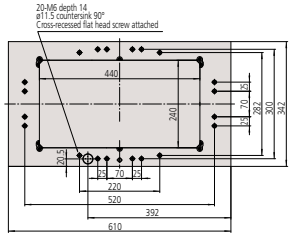

Microscopes

MF
SERIES 176 — Measuring Microscopes
SPECIFICATIONS

Model No. (XY stage size)		1010D	2010D	2017D	3017D	4020D
Order No.	MF-A	176-961-13	176-962-13	176-963-13	176-864-10	176-965-13
	MF-B	176-966-13	176-967-13	176-968-13	176-969-13	176-970-13
XY stage travel range		4 x 4" 100 x 100mm	8 x 4" 200 x 100mm	8 x 7" 200 x 170mm	12 x 7" 300 x 170mm	16 x 8" 400 x 200mm
Z-axis travel range		6" / 150mm		8.7" / 220mm		
Focusing method		Manual focusing (Coarse focusing: 30mm/rev., Fine focusing: 0.2mm/rev.)				
Measurement method		Linear encoder (2-axis model: X / Y-axis, 3-axis model: X / Y / Z-axis)				
Resolution (switchable)		.0001" / .00005" / .00001" (0.001mm / 0.0005mm / 0.0001mm)				
Measuring accuracy (at 20˚C)		XY-axis: (2.2+0.02L) µm, L = Measuring length (mm) when not loaded, JIS B 7153				
Indication accuracy (at 20˚C)		Z-axis: (5+0.04L) µm, L = Measuring length (mm), (MF-B type)				
Floating function		X and Y axes with Quick-release mechanism				
XY stage top size		11 x 11" 280 x 280mm	14 x 11" 350 x 280mm	16.1 x 13.4" 410 x 342mm	20.07 x 13.4" 510 x 342mm	24" x 13.4" 610 x 342mm
Effective glass size		7 x 7" 180 x 180mm	10 x 6" 250 x 150mm	10.6 x 9.4" 270 x 240mm	14.5 x 9.4" 370 x 240mm	17.3 x 9.4" 440 x 240mm
Swivel function		—		±5˚ (left)		±3˚ (left)
Max. stage loading		22lbs / 10kg		44lbs / 20kg		33lbs / 15kg
Max. workpiece height		6" / 150mm		8.7" / 220mm		

MF Selection of Machine Type (must select)

↓	1010	2010	2017	3017	4020	Counter	Motorized stage	Optics
A	176-961-13	176-962-13	176-963-13	176-864-10	176-965-13	X,Y	Manual	BF
B	176-966-13	176-967-13	176-968-13	176-969-13	176-870-13	X,Y,Z	Manual	BF
J	-	-	176-891-13	176-892-13	176-893-13	X,Y,Z	Z only	BF

Example: MF-A1010D results in part number 176-861-10

Illumination Unit (must select)

Applicable Illumination Unit	LED	Halogen
Order No.	176-449A	176-451A

Eye Tube Selection (must select)

Monocular with 10X eyepiece	176-392
Binocular with 10X eyepiece	176-394

DIMENSIONS

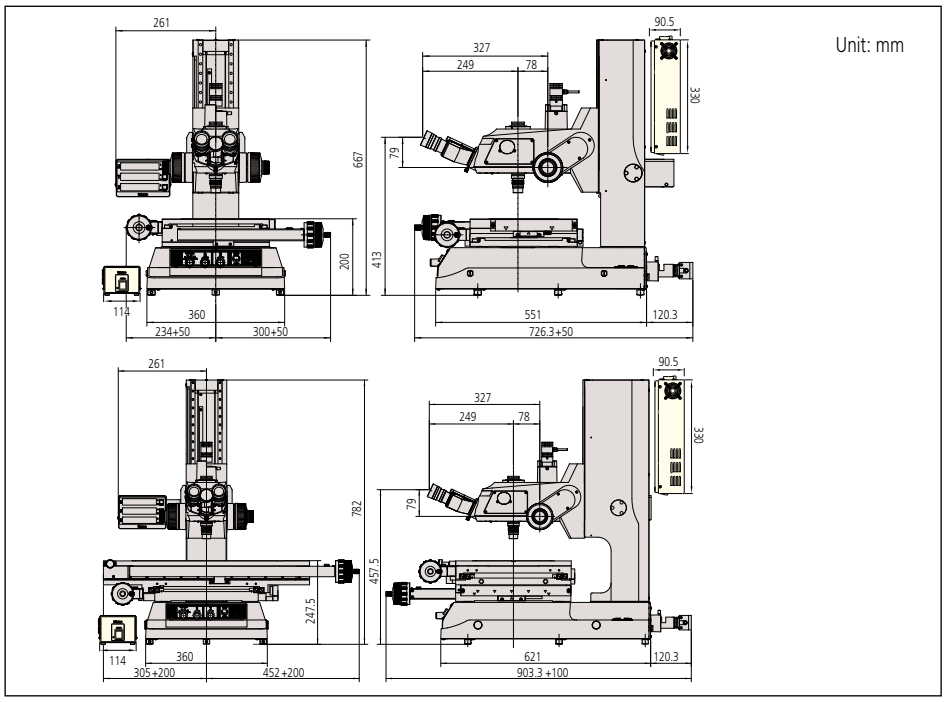

Optional Accessories

176-392: Monocular tube with 10X eyepiece
176-394: Binocular tube with 10X eyepiece set
378-866: 10X eyepiece set (view field dia.: 24mm)
378-858: 20X eyepiece set (view field dia.: 12mm)
375-043: Protractor eyepiece (10X)
176-313-11: Digital protractor eyepiece (10X)
375-036-2: 1X objective (W.D.: 61mm, N.A.: 0.03)
375-037-1: 3X objective (W.D.: 77mm, N.A.: 0.09) (std. accessory)
375-034-1: 5X objective (W.D.: 61mm, N.A.: 0.13)
375-039: 10X objective (W.D.: 51mm, N.A.: 0.21)
375-051: 20X objective (W.D.: 20mm, N.A.: 0.42)
375-052: 50X objective (W.D.: 13mm, N.A.: 0.55)
375-053: 100X objective (W.D.: 6mm, N.A.: 0.7)
12AAA645: GIF filter (transmitted / surface) (std. accessory)
12AAA646: LB80 color filter (transmitted / surface)
375-054: 0.5X camera adapter (with C-mount adapter)
970441: C-mount adapter
513667: Halogen bulb (12V, 50W)
12BAB345: Halogen bulb (long life type, 12V, 50W)
176-308: Vibration damping stand
176-309: Mounting stand
375-056: Stage micrometer
12AAA846: Foot switch

Illumination Units

176-367-2A: LED ring illuminator
176-387A: Twin fiber-optics illuminator

Fixture and Stage Accessories

176-107: Holder with clamp
172-378: V-block with clamp (max. workpiece dia.: 1" / 25mm)
172-604: Swivel center support[1] (max. workpiece dia.: 3.1" / 80mm)
176-305: Rotary stage with fine feed knob for 1010D/2010D models
176-306: Rotary stage with fine feed knob for 2017D/3017D/4020D models

[1] Fixture mount adapter (**176-310**) is required for 2010D models.
Fixture mount adapter (**176-304**) is required for 2017D/3017D/4020D models.

QM-Data200
2-D data processing unit
264-160-13: Stand-Mount Type
12AAA807: Connecting cable set

Focus pilot
FP-05
Focus assisting system

Vision Unit
PC-based vision measuring system
359-763

MF Motorized
SERIES 176 — Motorized Type Measuring Microscopes

- Motorized model of the MF Series. The Z-axis is motorized, and the stage can be operated using a remote box.
- Using the optional vision unit enables the image AF function.
- Illumination unit (reflected/transmitted) can be selected from a high-intensity LED or halogen bulb (selection required).
- Variable aperture diaphragm (reflected/transmitted) allows observation measurement while suppressing light diffraction.
- A wide variety of optional accessories are offered.
- ML series, high-NA objectives that are specially designed for the MF series (long-working distance type).
- High-magnification observation up to 2000X.

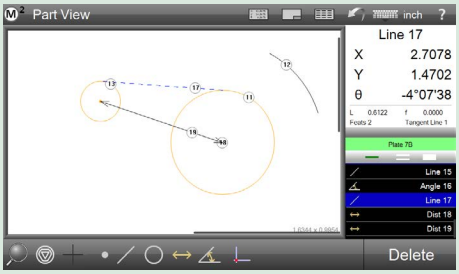

M2 Software & Hardware
2D Coordinate Measurment Interface
64PKA-M2-MF - MF/MFU M2 Retrofit Kit

MF-J2017D
* The binocular tube, eyepieces, and LED illumination unit are optional accessories.

SPECIFICATIONS

Model No.		MF-J2017D	MF-J3017D	MF-J4017D
Order No.		**176-891-13**	**176-892-13**	**176-893-13**
Observation image		BF (Bright field)/Erect image		
Eyepiece	Diopter adjustment	10X (field number: 24), 15X, 20X Note: Monocular unit: a 10X eyepiece (standard accessory), Binocular tube: two 10X eyepieces (standard accessory)		
Objective lens		ML series 3X objective lens (standard accessory), 1X, 5X, 10X, 20X, 50X, 100X		
Illumination unit (One of the two options must be selected.)	LED illumination unit	Transmitted illumination: Telecentric system, Built-in aperture diaphragm, White LED light source, stepless light intensity control, with cooling fan Reflected illumination: Koehler illumination, Variable aperture diaphragm mechanism, White LED light source, stepless light intensity control Control unit: Power ON/OFF switch (main switch), 100 - 240V AC power input connector		
	Halogen illumination unit	Transmitted illumination: Telecentric system, Built-in aperture diaphragm, Halogen bulb (12V, 50W), stepless light intensity control, with cooling fan Reflected illumination: Koehler illumination, Variable aperture diaphragm mechanism, Halogen bulb (12V, 50W), stepless light intensity control, with cooling fan Control unit: Power ON/OFF switch (main switch), 100 - 240V AC power input connector		
Vision AF *1		Available Option		
XY-axis Vision	Measuring range	200×170mm	300×170mm	400×200mm
Z-axis	Measuring range	220mm		
Measuring accuracy *2	(When no load is put on the X- or Y-axis)	(2.2+0.02L) μm L: Measuring length (mm)		
Digital counter	Resolution	1/0.5/0.1μm .0001"/.00005"/.00001" switchable		

*1: Vision Unit **359-763** and an image AF cable **12AAN358** are sold separately.
*2: Measuring method complies with JIS B7153.

Bulb replacement for transmitted/reflected illumination Standard: Halogen bulb (12V, 50W) (**No.513667**)
Bulb life: 1,100 hours

Need Support?

Microscopes

MF-U
SERIES 176 — High-power Multi-function Measuring Microscopes

MF-UB3017D
XY stage travel range: 12 x 6.7" / 300 x 170mm
(with optional turret, objective and fiber illumination)

- Observation with a clear and flareless erect image and a wide field of view
- Measuring accuracy that is highest in its class (and conforms to JIS B 7153)
- Proven high-NA objectives from the FS optical system (long-working distance type)
- Integration of metallurgical and measurement microscope functions provides high-resolution observation and high-accuracy measurement solution
- Illumination unit (reflected/transmitted) selectable from a high-intensity LED or halogen bulb (required)
- Variable aperture diaphragm (reflected/transmitted) allows for contrast adjustment
- Variety of standardized stages in sizes up to 400 × 200 mm
- Quick-release mechanism useful for moving the stage quickly when measuring workpieces that are large in size or quantity
- High-magnification eyepiece observation up to 4000X

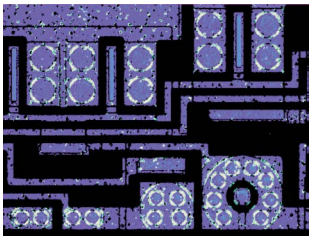

Polarized light observation:
Observing only the filtered light that vibrates in one direction. Used for observing materials with special optical characteristics, such as mineral and liquid crystal.

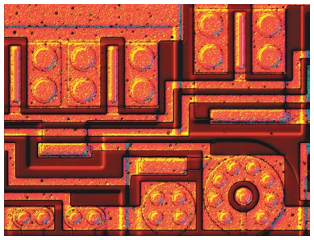

Differential interference contrast (DIC) observation:
Effective in detecting fine scratches and steps on the surface of metal, liquid crystal, and semiconductors.

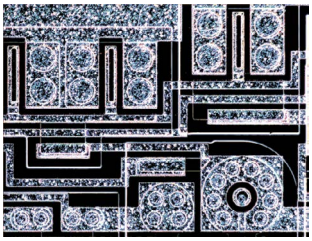

Dark field (DF) observation:
Observing only the scattered light by shutting down the direct light to the objectives. The scratches and dust that cannot be viewed in the bright view field can be observed by this method in high-contrast.

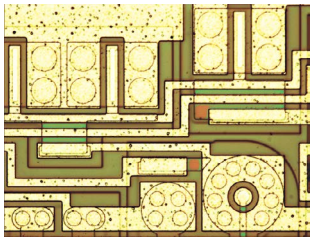

Bright field (BF) observation:
Most common method of observation. Observing directly the light reflected from the surface of the workpiece.

Technical Data

Observation image:	**Erect image**
Optical tube:	Siedentopf type (pupil distance adjustment: 51 - 76mm), 1X tube lens, Binocular tube (depression: 30°), Reticle projection method, with TV mount, Optical path ratio (eyepiece/TV mount: 50/50)
Eyepiece lens:	10X (field No.: 24mm), Optional: 15X, 20X
Turret (optional):	Manual or power
Objective (optional):	M / BD Plan Apo objective from 1X to 200X
Transmitted illumination	
• Light source:	Halogen bulb (12V, 50W) or LED
• Optical system:	Telecentric illumination with adjustable aperture diaphragms
• Functions:	Light intensity adjustable, Non-stepped brightness adjustment
Surface illumination	
• Light source:	Optional halogen illumination unit (fiber-optic cold light illumination) or LED
• Optical system:	Koehler illumination with adjustable aperture diaphragms
• Functions:	Light intensity adjustable, Non-stepped brightness adjustment
Display unit:	
• No. of axis:	2 axes or 3 axes
• Resolution:	.0001" / .00005" / .00001" / 0.001mm / 0.0005mm / 0.0001mm
• Functions:	Zero-setting, Direction switching, Data output (via RS-232C interface)
Power supply:	120V AC, 50/60Hz
Mass:	148lbs/67kg (1010D) / 157lbs/71kg (2010D) / 326lbs/148kg (2017D) / 344lbs/156kg (3017D) / 357lbs/162kg (4020D)

Selection of XY stage by travel range

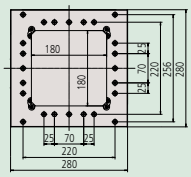

1010D:
4 x 4" / 100 x 100mm

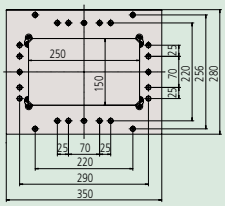

2010D:
8 x 4" / 200 x 100mm

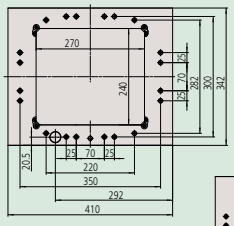

2017D:
8 x 6.7" / 200 x 170mm

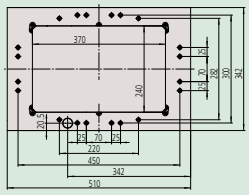

3017D:
12 x 6.6" / 300 x 170mm

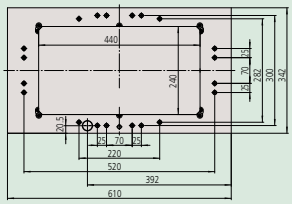

4020D:
16" x 8" / 400 x 200mm

MeasurLink ENABLED
Data Management Software by Mitutoyo

Products equipped with the measurement data output function can be connected to the measurement data network system MeasurLink® (refer to page A-3 for details).

MF-U
SERIES 176 — High-power Multi-function Measuring Microscopes

SPECIFICATIONS

Model No. (XY stage size)		1010D	2010D	2017D	3017D	4020D
Order No.	MF-UB	176-976-13	176-977-13	176-878-10	176-879-10	176-980-13
	MF-UD	176-886-10	176-887-10	176-888-10	176-889-10	176-990-13
XY stage travel range		4 x 4" 100 x 100mm	8 x 4" 200 x 100mm	8 x 6.7" 200 x 170mm	12 x 6.7" 300 x 170mm	16 x 8" 400 x 200mm
Z-axis travel range		6" / 150mm		8.7" / 220mm		
Focusing method		Manual focusing (coarse focusing: 10mm/rev., fine focusing: 0.1mm/rev.)				
Measurement method		Linear encoder (2-axis model: X / Y-axis, 3-axis model: X / Y / Z-axis)				
Resolution (switchable)		.0001" / .00005" / .00001" (0.001mm / 0.0005mm / 0.0001mm)				
Measuring accuracy (at 20˚C)		XY-axis: (2.2+0.02L) µm, L = Measuring length (mm) when not loaded, JIS B 7153				
Indication accuracy (at 20˚C)		Z-axis: (5+0.04L) µm, L = Measuring length (mm)				
Floating function		X and Y axes with Quick-release mechanism				
XY stage top size		11 x 11" 280 x 280mm	14 x 11" 350 x 280mm	16 x 13.6" 410 x 342mm	20 x 13.6" 510 x 342mm	24 x 13.6" 610 x 342mm
Effective glass size		7.1 x 7.1" 180 x 180mm	10 x 6" 250 x 150mm	10.6 x 9.6" 270 x 240mm	14.6 x 9.6" 370 x 240mm	17.3 x 9.6" 440 x 240mm
Swivel function		—		±5˚ (left)		±3˚ (left)
Max. stage loading		22lbs / 10kg		44lbs / 20kg		33lbs / 15kg

Selection of machine type

Machine type	MF-UB	MF-UD
Observation type	Bright field (BF)	Bright field / Dark field (BF/DF)
Measurement system	X, Y and Z-axis (3 axes)	X, Y and Z-axis (3 axes)

Illumination Unit (must select LED or Halogen illumination unit)

Applicable Illumination Unit	LED	Halogen
Order No.	176-446A (transmitted & reflected)	176-452A (transmitted)
		176-316A (reflected)

Note: illumination unit not included. If halogen transmitted illumination is selected, then 176-316A must be chosen.

DIMENSIONS

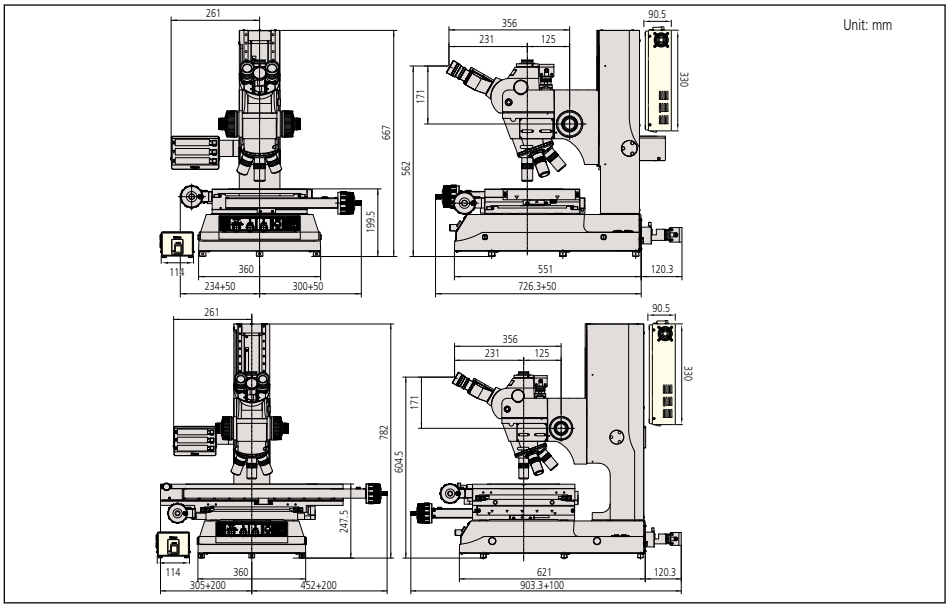

Optional Accessories

378-866: 10X eyepiece set (view field dia.: 24mm) (standard accessory)
378-858: 20X eyepiece set (view field dia.: 12mm)

Turret (Nosepiece) **must select**
378-018: Adjustable manual BF turret (4 port)
378-216A: Adjustable power BF turret (5 port)
176-211: Adjustable manual BF/DF turret (4 port)
176-212-11: Adjustable power BF/DF turret (4 port)

Objectives

See page I-28 for objective selection

Manual and Power Turrets

Filters

378-092: Polarization unit
12AAA645: GIF filter (standard accessory)
12AAA646: LB80 color filter (for halogen illuminator, (**176-448A**)

Camera Mounts

375-054: 0.5X camera adapter (with C-mount adapter)
970441: C-mount adapter

Bulbs

513667: Halogen bulb (12V, 50W)
12BAB345: Halogen bulb (long life type, 12V, 50W)
517181: Halogen bulb (12V, 100W)

Illumination Units

176-316A: Halogen illumination unit (12V, 150W)
176-387: Twin fiber-optics illuminator

Fixture and Stage Accessories

176-107: Holder with clamp
172-378: V-block with clamp (max. workpiece dia.: 1" / 25mm)
172-604: Swivel center support* (max. workpiece dia.: 3.1" / 80mm)
176-305: Rotary stage with fine feed knob for 1010D/2010D models
176-306: Rotary stage with fine feed knob for 2017D/3017D/4020D models

*Fixture mount adapter (**176-310**) is required for 2010D models.
Fixture mount adapter (**176-304**) is required for 2017D/3017D/4020D models.

Misc.

176-308: Vibration damping stand
176-309: Mounting stand
375-056: Stage micrometer
937179T: Foot switch

Reticle See page I-21

Mitutoyo

Microscopes

MF-U Motorized
SERIES 176 — Motorized-type Universal Measuring Microscopes

- Motorized model of the MF-U Series. The Z-axis is motorized and can be operated using a remote box.
- Using the optional vision unit enables the image AF function.
- Illumination unit (reflected/transmitted) can be selected from a high-intensity LED or halogen bulb (required).
- Variable aperture diaphragm (reflected/ transmitted) allows observation measurement while suppressing light diffraction.
- A wide variety of optional accessories are offered.
- Proven high-NA objectives from the FS optical system (long working distance type).
- Integration of metallurgical and measurement microscope functions provide high-resolution observation and a high-accuracy measurement solution.
- High-magnification observation up to 4000X.

MF-UJ2017D
The turret, objectives, and LED illumination unit are sold separately.

MF-U Selection of Machine Type

↓	2017	3017	4020	Counter	Motorized stage	Optics
J	176-894-13	176-895-13	176-896-13	X,Y,Z	Z only	BF
K	176-897-13	176-898-13	176-899-13	X,Y,Z	Z only	BF/DF

SPECIFICATIONS

BF (Bright field)	Model No.	**MF-UJ2017D**	**MF-UJ3017D**	**MF-UJ4020D**
	Order No.	**176-894-13**	**176-895-13**	**176-896-13**
BD (Bright / Dark field)	Model No.	**MF-UK2017D**	**MF-UK3017D**	**MF-UK4020D**
	Order No.	**176-897-13**	**176-898-13**	**176-899-13**
Observation image		BF (Bright field), DF (Dark field) , Polarization, Differential Interference Contrast (DIC) / Erect image		
Eyepiece	Diopter adjustment	10X (standard accessory) (Field number: 24), 15X, 20X		
Objective lens (optional)	BF (Bright field)	M Plan Apo, M Plan Apo HR, M Plan Apo SL, G Plan Apo		
	BD (Bright / Dark field)	BD Plan Apo, D Plan Apo HR, BD plan Apo SL		
Illumination unit (One of the two options must be selected.)	LED illumination unit	Transmitted illumination: Telecentric system, Built-in aperture diaphragm, White LED light source, stepless light intensity control, with cooling fan Reflected illumination: Koehler illumination, Variable aperture diaphragm mechanism, White LED light source, Non-step light intensity control Control unit: Power ON/OFF switch (main switch), 100 - 240V AC power input connector		
	Halogen illumination unit	Transmitted illumination: Telecentric system, Built-in aperture diaphragm, Halogen bulb (12V, 50W), stepless light intensity control, with cooling fan Reflected: BF/BD Kohler illumination with adjustable aperture diaphragm, 12V100W or 12V15W halogen lamp (selectable), external fiber illumination, stepless brightness adjustment Control unit: Power ON/OFF switch (main switch), 100 - 240V AC power input connector		
Vision AF *1		3		
XY-axis	Measuring range	8×6.7" / 200×170mm	12×6.7" / 300×170mm	16×8" / 400×200mm
Z-axis	Measuring range	8.7" / 220mm		
Measuring accuracy	(When no load is put on the X- or Y-axis)	(2.2+0.02L) μm L: Measuring length (mm)		
Digital counter	Resolution	1/0.5/0.1μm .0001"/.00005"/.00001" switchable		

*1: Vision unit and an image AF cable are separately required.
*2: Measuring method complies with JIS B7153.

Bulb replacement for transmitted illumination Standard: Halogen bulb (12V, 50W) (**No.513667**), Bulb life: 1,100 hours
For replacement for reflected illumination (from separate light source) Standard: Halogen bulb (12V, 100W) (**No.517181**),
High-intensity bulb (12V, 100W) (**No.12BAD602**)
*At the time of purchase, a standard bulb and a high-intensity bulb are provided. (Only for the reflected illumination models.)

Need Service?

Accessories for Measuring Microscope

Stage Micrometer

SPECIFICATIONS

Order No.	375-056
Range	1mm
Graduations	0.01mm
Accuracy (at 20˚C)	(1+L)µm, L = Measuring length (mm)
Dimensions (WxD)	3" x 1" / 76 x 26mm
Mass	16g

Focus Pilot FP-05

- By installing this system on the camera mount of an MF series measuring microscope and projecting the focusing chart onto the workpiece surface, the focal point can be detected with high accuracy and high repeatability.
- The brightness of the chart can be adjusted.
- A wide view field observation on the monitor is made possible with the use of a CCD camera (C-mount adapter is included.)

- Four types of chart patterns are available.* The pattern should be selected in accordance with the type of workpiece surface texture.

* Factory installed option

Concentric circle Slit

SPECIFICATIONS

Order No.	375-057-11	375-058-11	375-067-11	375-068-11
Applicable microscopes	MF D models		MF-U D models	
Light source	Green LED	Red LED	Green LED	Red LED
Magnification	0.5X, Accuracy: 0.1%**			
Camera adapter	C-mount (provided)			
Applicable CCD camera	Up to 2/3-inch			
Mass	4lbs / 1.8kg			

**Within 2/3 area from the center of view field

Optional Reticles

12AAG838 (12AAG878): Cross-hair (7µm width)
12AAG836 (12AAG877)*: Cross-hair (5µm width)
12AAG873 (12AAG876): Cross-hair (3µm width)
12AAG839 (12AAG879): Cross-hair and 45˚ angle
12AAG840 (12AAG880): Broken cross-hair and 60˚ angle
12AAG842: 20mm scale (0.1mm reading)
12AAG843: Concentric circle (ø1.2 - ø18mm)
12AAG844: 10mm scale (0.1mm reading)
12AAG854: Concentric circle (ø.01" - ø.2")
( ): for MF-U models,
* Standard accessory

Manual and Power Turrets

SPECIFICATIONS

Order No.	176-211	378-018	176-212-11	378-016A	378-216A
Observation type	BD	BF	BD	BF	BF
No. of objective mounts	4-mount	4-mount	4-mount	4-mount	5-mount
Driving method	Manual		Motor		
Dimensions (W x D x H)	—	—	Turret: 6.5 x 2.6 x 5.4" 164 x 65 x 137		
			Control Box: 4.1 x 3 x 7.6" 108 x 72 x 193		

Reticle mount (standard accessory)

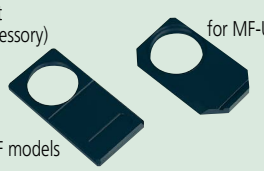

for MF-U models

for MF models

Cross-hair and 90˚ angle (standard accessory)

Accessories for Measuring Microscope

Twin fiber-optics illuminator

SPECIFICATIONS

Order No.	176-387
Applicable microscopes	MF, MF-U models
Length of fiber cable	28" / 700mm
Light source	Halogen bulb (12V, 100W) (**517181**: halogen bulb)
Dimensions (W x D x H)	Light unit: 9.3 x 3 x 4.7" 235 x 76 x 120mm

LED Ring Illuminator

SPECIFICATIONS

Order No.	176-367-2A
Applicable microscopes	MF models with 1X/3X/5X/10X objective
Light source	White LED
Length of LED cable	59" / 1500mm

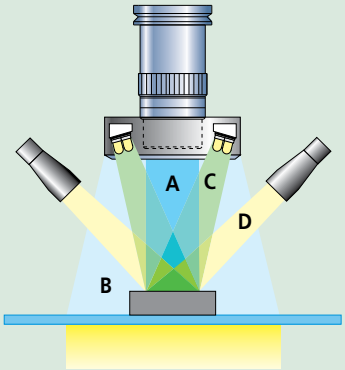

A: Vertical surface illumination (Halogen)

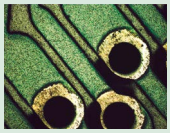
PCB

HDD suspension

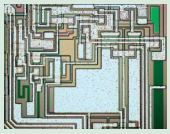
IC circuit

B: Ring fiber optics illumination

Flexible PCB

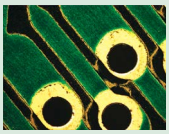
PCB

Electric parts

C: LED ring illumination

HDD suspension

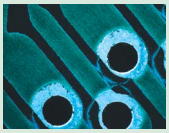
PCB

Black resin molded parts

D: Twin fiber-optics illumination

IC package

Garnet

PCB

Accessories for Measuring Microscope

QM-Data200
SERIES 264 — 2-D Data Processing Unit

The QM-Data200 is a geometric readout/analysis unit for optical instruments like profile projectors. This features powerful 2-D coordinate measurement capabilities with unmatched simple key operation. The QM-Data200 improves operator productivity, minimizes errors, and saves measurement time and production cost.

- Various graphic displays on the large colored LCD screen for easy measurement operations.
- One-key operation for combined measurements that are often used (circle-circle distance, etc.)
- The AI measurement function (automatic identification of measuring item) eliminates switching between the measurement command keys.
- Equipped with the measurement procedure teaching function and the measuring position navigation in Repeat mode.
- The user menu function allows users to register measurement commands or part programs to create custom menus.
- Tolerance zone measurement of data processing results and various statistical processing for each item is available.
- Measurement results output to "MS-Excel"in spreadsheet (CSV) format.
- Measurement procedures and results can be saved using a USB Drive.
- Two models available: a stand-alone type with tilt system and a flexible-arm type that can be mounted on a profile projector.

Technical Data

Resolution:	0.0001mm
Program functions:	Part program creation, execution, editing
Statisical processing:	Number of data, maximum value, minimum value, mean value, standard deviation, range, histogram
Element memory:	Maximum of 1000 elements
Element recall:	Point, line, circle, distance, ellipse, rectangular hole, slotted hole, intersection and intersecting angle
Element key-in:	Point, line, circle
Display system:	Monographic LCD (320 x 240 dots, with back light)
Measurement result file output:	RS-232C/USB output (CSV format, MUX-10F format)
Display language:	Japanese/English/German/French/Italian/Spanish/Portuguese/Swedish/Polish/Dutch/Hungarian
Data input:	RS-232C/USB, X/Y/Z-axis signal, Footswitch
Data output:	RS-232C/USB
Power supply	120V AC, 50/60Hz
Mass	2.2kg (stand-mount type)
2.1kg (arm-mount type)	

QM-Data200
Order No.: 264-160-13A (stand-mount type)
Order No.: 264-161-13A (arm-mount type)

QM-Data200
Stand-mount type

Intuitive panel design

The QM-Data200 employs Geometry Keys to accelerate the measurement process. The probing routine of standard geometric features and combinations are designed with Geometry Keys on the front panel. Click the key you need and capture features to complete the measurement quickly and accurately. This improves operator productivity, reduces errors, and saves operation time and cost.

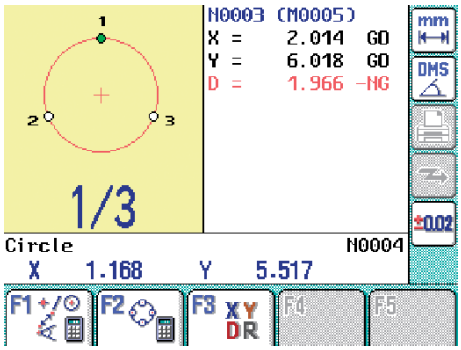

Graphic display

Measurement information and data are visualized on the back-lit colored LCD with graphical interfaces. The geometric feature selected is displayed with the probing navigator. The measurements map and blink indication show the probing points and sequences. This improves operation accuracy and reduces errors and time.

Need Integration Help?

Accessories for Measuring Microscope

Vision Unit
SERIES 359 — Vision System Retrofit for MF and MF-U Microscopes

- The automatic edge-detection tools and various macro icons allow measurement in one easy step.
- The graphics and measurement navigation functions facilitate operation.
- Image data input/storage function.
- Measurement results are output in CVS format. This lets the user generate an inspection table in MS-Excel®.
- Allows the tolerance zone measurement of measurement results and various types of statistical processing for each item.
- Combined use with the focus pilot provides high-accuracy height measurements. (Patent pending)
- A series of measuring operations can be performed using just one screen display.
- The auto-brightness control function reproduces the type and degree of illumination required. (This function is limited to the MF/MF-U series.)

QSPAK Measurement Window

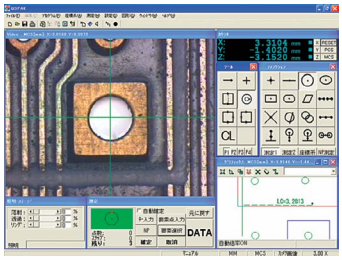

The PC system, QSPAK software and microscope are optional.

Vision Unit
No.: 359-763 (for MF D)

: Optional accessory

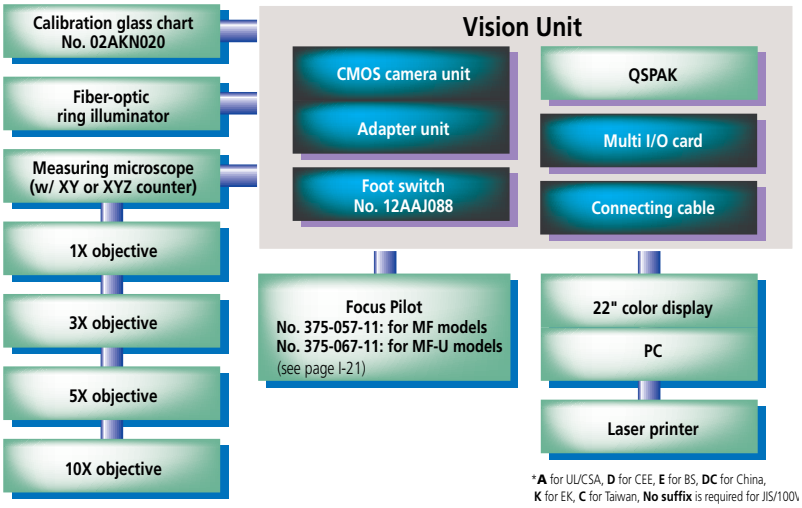

*A for UL/CSA, D for CEE, E for BS, DC for China, K for EK, C for Taiwan, No suffix is required for JIS/100V

SPECIFICATIONS

Projected Image	Inverted Image
Onscreen Magnification	19x-1900x (22" Monitor)
Camera Unit	
Image Sensor Size	1/2" Color CMMOS
Image Sensor Resolution	3 MP
Interface	USB 2.0
Dimensions (WxDxH)	2.28 x 2.32 x 3.27" 58 x 59 x 83mm
Adapter Unit	
Measurement Software	QSPak VUE (optional)
Dimensions (DXH)	1.77 x 4.84" / 45 x 123mm
Magnification	0.5x
Optional Accessory:	Foot Switch **(12AAJ088)**

QSPAK, optional software

For observation/comparison of form
- Template matching function
- Manual pattern matching function

For simple measurement
- One-click edge detection tool function
- Smart tool function
- User macro function

For repeated measurement/ auto-measurement
- Quick navigation function
- Playback function
- Graphic function
- External data output function
- Statistical calculation function

One-click Edge Detection

By clicking the mouse near the edge of a workpiece, QSPAK automatically scans the edge and detects it, showing its coordinates. This function also works with the point tool, box tool, circle tool and auto-focus tool.

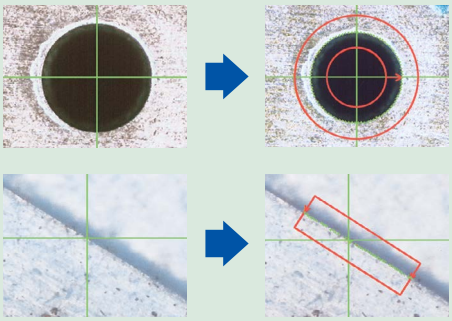

Graphic Window

The measurement results and measured elements are plotted in the graphic window in real-time. By using this function, the user can check the current measuring position at a glance. The graphic window can be used for geometrical calculation.

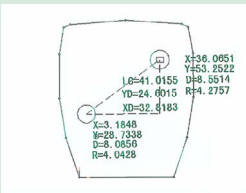

Accessories for Measuring Microscope

FS-70
SERIES 378 — Microscope Unit for Semiconductor Inspection

- The optical system that was developed for the best-selling FS60 models was further enhanced for the FS70 models. It is ideal as a microscope unit of a prober station for semiconductors. (All models CE marked.)
- The FS70L supports three types of YAG laser wavelength ranges (1064nm, 532nm and 355nm), while the FS70L4 supports two types of wavelength ranges (532nm and 266nm), thus expanding a scope of laser applications, allowing laser-cutting of thin films used in semiconductors and liquid crystal substrates. However, Mitutoyo assumes no responsibility for the performance and/or safety of the laser system used with Mitutoyo microscopes. Careful examination is recommended in selecting a laser-emission unit.
- Bright field, differential interference contrast (DIC) and polarized observations are optional with FS70Z and FS70. The FS70L and FS70L4 do not support the DIC method.
- By employing an inward revolver, the long working distance objectives provide excellent operability.
- An ergonomic design with superb operability: the FS70 employs the erect-image optical system (the image in the field of view has the same orientation as the specimen) and enlarged fine focus adjustment wheel with rubber-grip coarse adjustment knob.

Technical Data

Focus Adjustment Method:	With concentric coarse and fine focusing wheels (right and left)
Range:	50mm travel range 0.1mm/rev. for fine adjustment, 3.8mm/rev. for coarse adjustment
Trinocular tube Image:	Erect image
Pupil distance:	Siedentopf type, adjustment range: 2-3" / 51-76mm
Field number:	24
Tilt angle:	0° - 20° (only -TH, -THS models)
Illumination system:	Reflective illumination for bright field (Koehler illumination, with aperture diaphram)
Light source (optional):	12V100W fiber optics, non-stepped adjustment, light guide length 1.5m, power consumption 150W
Objectives (optional):	M Plan Apo, M Plan Apo SL, G Plan Apo

Optional Accessories

For a complete listing of accessories see Microscope Units and Objectives brochure, E4191-378

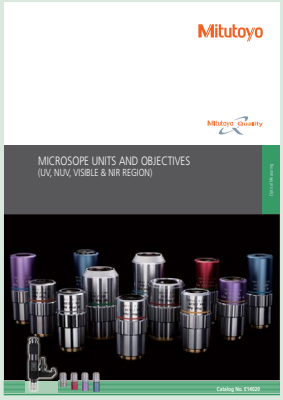

Refer to No. (**E14020**) for more details.

FS70Z

FS70L

FS70L4

Model No. **Order No.**	FS70 **378-184-1**	FS70-TH **378-184-3**	FS70Z **378-185-1**	FS70Z-TH **378-185-3**	FS70L **378-186-1**	FS70L-TH **378-186-3**	FS70L4 **378-187-1**	FS70L4-TH **378-187-3**
Short base model No. **Order No.**	FS70-S **378-184-2**	FS70-THS **378-184-4**	FS70Z-S **378-185-2**	FS70Z-THS **378-185-4**	FS70L-S **378-186-2**	FS70L-THS **378-186-4**	FS70L4-S **378-187-2**	FS70L4-THS **378-187-4**
Focus adjustment	50mm travel range with concentric coarse (3.8mm/rev) and fine (0.1mm/rev) focusing wheels (right / left)							
Image	Erect image							
Pupil distance	Siedentopf type, adjustment range: 2 - 3" / 51 - 76mm							
Field number	24							
Tilt angle	—	0° - 20°	—	0° - 20°	—	0° - 20°	—	0° - 20°
Optical pass ratio	50/50	100/0 or 0/100	50/50	100/0 or 0/100	100/0 or 0/100		100/0 or 0/100	
Protective filter	—		—		Built-in laser beam filter		Built-in laser beam filter	
Tube lens	1X		1X - 2X zoom		1X		1X	
Applicable laser	—		—		1064/532/355nm		532/266nm	
Camera mount	C-mount (using optional adapter B)				Use a laser with TV port.		C-mount receptacle (with green filter switch)	
Illumination system, optional	Reflective illumination for bright field (Koehler illumination, with aperture diaphragm) 12V 100W fiber optics, non-stepped adjustment, light guide length: 1.5m, power consumption 150W							
Objective, optional (for observation)	M Plan Apo, M Plan Apo SL, G Plan Apo							
Objective, optional (for laser-cutting)	—				M/LCD Plan NIR, M/LCD Plan NUV		M Plan UV	
Loading weight*	32lbs/14.5kg	30lbs/13.6kg	31lbs/14.1kg	29lbs/13.2kg	31lbs/14.2kg	30lbs/13.5kg	31lbs/13.9kg	29lbs/13.1kg
Mass (main unit)	13lbs/6.1kg	15.5lbs/7.1kg	14.5lbs/6.6kg	16.5lbs/7.5kg	14lbs/6.4kg	15.5lbs/7.2kg	14.5lbs/6.7kg	16.5lbs/7.5kg

*Loading weight on optical tube excluding weight of objective lenses and eyepieces.

Need Calibration?

Accessories for Measuring Microscope

VMU
SERIES 378 — Unit for Incorporating into Equipment

- Telecentric system equipped with an aperture diaphragm is standard on the epi-illumination optical system.
- Best suited to process images for which uniform illumination is required.
- Design and manufacture are flexible to meet your demands such as double camera mounting or double (low/high) magnification.

VMU-V VMU-H VMU-LB VMU-L4B

- Compact and lightweight microscope designed to be built in for camera observation
- Can be used with YAG (near-infrared, visible, near-ultraviolet, or ultraviolet) lasers.*1
  *1 The performance and safety of laser-equipped system products is not guaranteed.
- For VMU-LB and VMU-L4B, the rigidity and general performance of the microscope main unit have been enhanced compared with previous models.
- Compatible with infrared optical systems*2
  *2 An infrared source and infrared camera are necessary.

SPECIFICATIONS

Model No.		VMU-V	VMU-H	VMU-LB	VMU-L4B
Order No.		**378-505**	**378-506**	**378-513**	**378-514**
Camera mounting direction		Vertical	Horizontal	Vertical (Rotatable)	
Observation		Bright-field/Erect image	Bright-field/Inverted image	Bright-field/Erect image	
Optical tube	TV adapter	Equipped with a C-mount			Equipped with a C-mount (Equipped with a green filter switching mechanism)
	Image forming (tube) lens	Built-in 1X (visible/near-infrared calibration)		Built-in 1X (near-infrared/visible/near-ultraviolet calibration)	Built-in 1X (ultraviolet/visibility compensation)
	Available for lasers	—		YAG laser source (Fundamental, Second/Third harmonic) mountable	YAG laser source (Second/Third/Fourth harmonic) mountable
Objective (optional)	For observation	M Plan Apo, M Plan Apo HR, M Plan Apo SL, G Plan Apo			
	For laser processing	—		NIR Series NUV Series Note 1: Selected depending on the wavelength of the laser source	NIR Series NUV Series UV Series Note 2: Selected depending on the wavelength of the laser source
Applicable camera (s)		2/3 type or less cameras (C-mount type)			
Optical system epi-illumination		Telecentric system equipped with an aperture diaphragm			
Illuminated lens tube		Bright-field illuminated lens tube			
Illumination unit (optional)		Fiber-optic cable illumination unit (100 W) (**378-700**)			
Main unit mass		650 g	750 g	1270 g	1300 g

Note 3: The **M Plan Apo 1X** objective is used with the polarization unit (**378-710** or **378-715**).

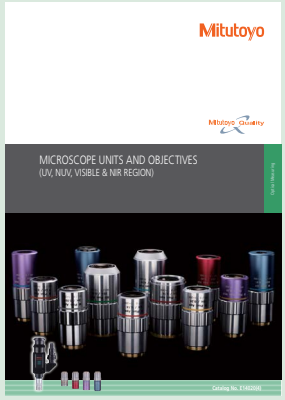

Refer to the **Microscope Units and Objectives Brochure (E14020)** for more details.

WIDE VMU

WIDE VMU-HR WIDE VMU-BDV WIDE VMU-BDH

SPECIFICATIONS

		For Bright-field Observation	For Bright/Dark-field Observation	
Model No.		**WIDE VMU-HR**	**WIDE VMU-BDV**	**WIDE VMU-BDH**
Order No.		**378-519**	**378-517**	**378-518**
Camera mounting orientation		Vertical	Vertical	Horizontal
Observation		Bright-field/Erect image	Bright/Dark-field/Erect image	Bright/Dark-field/Inverted image
Optical tube	Optical system	Magnification: 1X Visible light - Near-infrared light	Magnification: 1X Visible light	
	Camera Mount	F-Mount, C-Mount (with aligning and parfocal adjustment mechanism)		
	Imaging forming (tube) lens	Built in 1X (visible - NIR)	Built in 1X (visible)	
	Image field	ø30		
	Polarized unit*1	Mountable		
Objective (required option)		M Plan Apo, M Plan Apo HR, M Plan Apo SL, G Plan Apo, NIR Series	BD Plan Apo	
Applicable camera		Diagonal line length: 30 mm or less (equivalent to APS-C format)		
Optical system epi-illumination		Telecentric (Pupil diameter of ø16.8) Note: Coaxial epi-illumination, with aperture diaphragm	Telecentric illumination, Bright/Dark-field illumination optical tube (Dual-port fiber-optic illumination) Bright/Dark-field switching with light source on-off	
Illuminated lens tube		Bright-field illuminated lens tube (rotatable) *3, selectable between LED adapter and fiber adapter (both supplied as standard)	Bright-field illuminated lens tube (rotatable) *3	
Illumination unit (optional)*2		Fiber-optic illumination unit (100 W) (378-700)		
Main unit mass		1400 g	2000 g	2150 g

*1 Polarized observation by Bright-field illumination *2 Support for third-party LED illuminators (**WIDE VMU-HR** only)
*3 The fiber (light source) mount orientation can be changed.

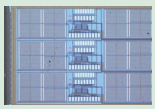

Bright-field

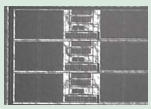

Infrared

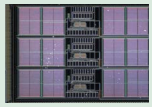

Dark-field

- Observation over a wide field of view (Image field of ø30 mm)
- Greatly enhanced brightness on the periphery of the field of view (Reduces the dependence on the light distribution characteristics.)
- Compatible with infrared optical systems*
  * An infrared source and infrared camera are necessary. For more details on infrared observation, visit your local Mitutoyo M³ Solution Center or contact your Mitutoyo Sales Representative.
- Small optical observation system
- Compatible with HR series of high resolving power lens (designed with pupil diameter of ø16.8 mm)
- Available for various observation methods (Including bright-field, dark-field for visual or scratch inspection, and polarized observation of objects with polarization characteristics)

Accessories for Measuring Microscope

Varifocal Lens TAGLENS

- Without changing the required magnification, ultra-high speed variable focal length enables obtaining perfectly focused images in real-time with stress-free operation.
- The time required for auto-focusing is drastically reduced, and the optical system focus range is extended without the expense of a mechanical drive.

TAGLENS-T1

Ultra-high speed, varifocal lens.
A dedicated controller and software are equipped as standard.

SPECIFICATIONS

Operating principle	Variable refraction index
Resonance frequency	70 kHz
Effective aperture	ø11 mm*
Transmittance	90% or more (λ400 to 700 nm)*

* The above values are based on optical design theoretically.

Refer to the **Varifocal Lens TAGLENS Brochure (E14025)** for more details.

Video Microscope Unit VMU-T1

Microscope unit for configuring a varifocal optical system by incorporating TAGLENS-T1, the objective and the camera.

SPECIFICATIONS

Compatible TAGLENS	TAGLENS-T1
Imaging lens magnification	1X
Imaging area	ø11 mm
Applicable objective	**M Plan Apo** Series
Options	Manual turret, Power turret, Polarizer, Focusing unit A or B, XY stage, Simplified stand.

M Plan Apo Series

Objective		1X	2X	5X	7.5X	10X	20X	50X
Depth of focus×2 (mm)		0.88	0.18	0.028	0.012	0.007	0.003	0.0018
Total scanning width (mm)		16	4.0	0.64	0.28	0.16	0.04	0.007
Real FOV (mm)	1/2 inch camera	4.8×6.4	2.4×3.2	0.96×1.28	0.64×0.85	0.48×0.64	0.24×0.32	0.096×0.128
	2/3 inch camera	6.6×8.8	3.3×4.4	1.32×1.76	0.88×1.17	0.66×0.88	0.33×0.44	0.132×0.176

Schedule Service

Accessories for Measuring Microscope

Eyepieces
SERIES 378

- The field of view is extra wide.
- Optional reticles are available.

SPECIFICATIONS

Order No. (2pcs. set)	Magnification	Field number	Mass	Individual order No.
378-866	10X	24	85g	**378-856-5**
378-858	20X	12	55g	**378-858-5**

378-866

378-858

Reticles (optional)

516848: Cross-hair
516576: Broken cross hair (90° and 60°)
516578: Concentric circle (Diametric increment: 1.2mm)
516577: 20mm scale (Minimum reading: 0.1mm) with cross hair
516849: 10mm scale (Minimum reading: 0.1mm)
516850: 5mm scale (Minimum reading: 0.05mm)

Objectives
SERIES 378

The Mitutoyo 378 Series objectives have the world's longest working distance and an infinity correction optical system. These objectives provide flexible observation at high magnifications and independent correction of chromatic aberration.

- The long working distance objectives provide excellent clearance between the lens surface and the workpiece surface in focus, making it possible to observe workpieces which are usually hard to focus because of awkward projections.
- The metallurgical plan apochromatic (M Plan Apo) objective provides a flat, chromatic aberration-free image throughout the field of view, making it suitable for any type of microscope.
- Specially designed objectives also are available with correction for near-infrared radiation, near-ultraviolet radiation, and ultraviolet radiation, or various thicknesses of LCD screen glasses.
- The mounting screw threads of objectives are designed to conform to JIS B-7141-1988.

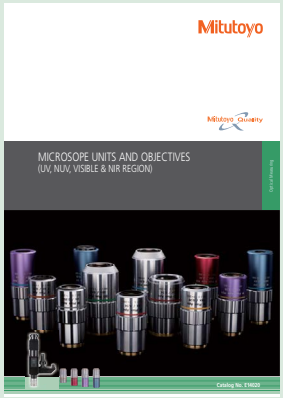

Refer to **No. (E14020)** for more details.

I

M Plan Apo and M Plan Apo SL
Objectives for bright field observation

BD Plan Apo and BD Plan Apo SL
Objectives for bright/dark field observation

Find Training

Near-infrared radiation corrected M Plan Apo NIR objectives

Near-ultraviolet radiation corrected M Plan Apo NUV objectives

Ultraviolet radiation corrected M Plan UV objectives

Accessories for Measuring Microscope

M Plan Apo for Bright Field Observation

Order No.	Mag.	N.A.	W.D.	f	R	D.F.	View field 1	View field 2	Mass
378-800-3	1X	0.025	11.0mm	200mm	11.0µm	440µm	ø24mm	4.8x6.4mm	300g
378-801-12	2X	0.055	34.0mm	100mm	5.0µm	91µm	ø12mm	2.4x3.2mm	220g
378-802-12	5X	0.14	34.0mm	40mm	2.0µm	14.0µm	ø4.8mm	0.96x1.28mm	230g
378-807-3	7.5X	0.21	35.0mm	26.67mm	1.3µm	6.2µm	ø3.6mm	0.64x0.85mm	240g
378-803-3	10X	0.28	34.0mm	20mm	1.0µm	3.5µm	ø2.4mm	0.48x0.64mm	240g
378-804-3	20X	0.42	20.0mm	10mm	0.7µm	1.6µm	ø1.2mm	0.24x0.32mm	270g
378-805-3	50X	0.55	13.0mm	4mm	0.5µm	0.9µm	ø0.48mm	0.10x0.13mm	290g
378-806-3	100X	0.70	6.0mm	2mm	0.4µm	0.6µm	ø0.24mm	0.05x0.06mm	320g

DIMENSIONS

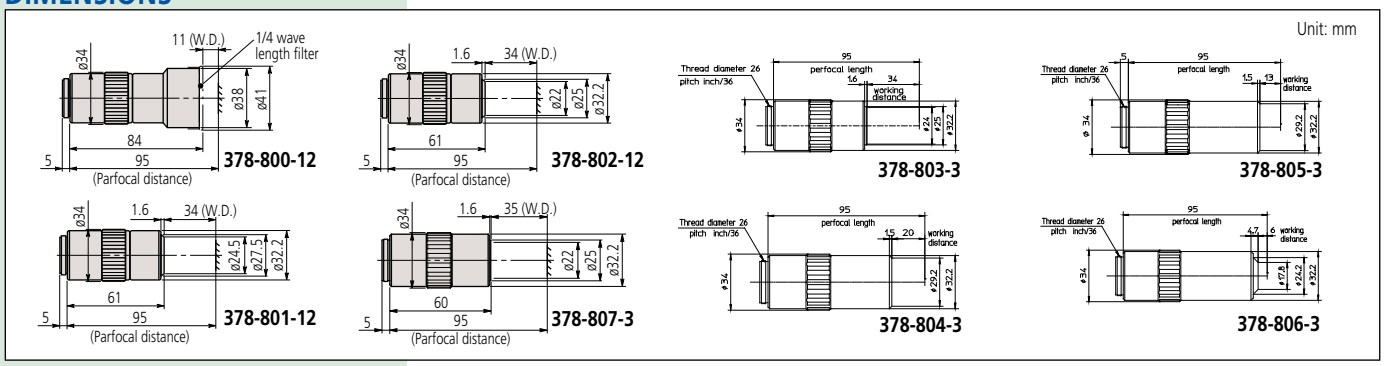

Note:
These objectives offer extra-long working distance.

M Plan Apo SL for Bright Field Observation

Order No.	Mag.	N.A.	W.D.	f	R	D.F.	View field 1	View field 2	Mass
378-810-3	20X	0.28	30.5mm	10mm	1.0µm	3.5µm	ø1.2mm	0.24x0.32mm	240g
378-811-15	50X	0.42	20.5mm	4mm	0.7µm	1.6µm	ø0.48mm	0.10x0.13mm	280g
378-813-3	100X	0.55	13.0mm	2mm	0.5µm	0.9µm	ø0.24mm	0.05x0.06mm	290g
378-816-3	200X	0.62	13.0mm	1mm	0.4µm	0.7µm	ø0.12mm	0.025x0.03mm	490g

DIMENSIONS

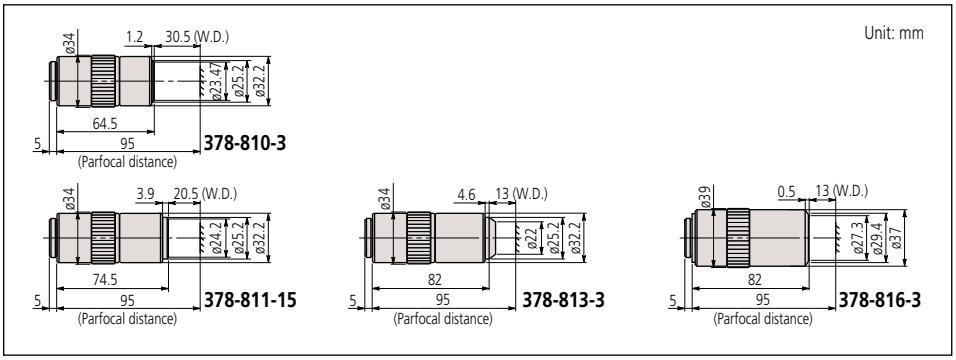

Note:
These objectives offer extra-high resolving power.

M Plan Apo HR for Bright Field Observation

Order No.	Mag.	N.A.	W.D.	f	R	D.F.	View field 1	View field 2	Mass
378-787-16	5X	0.21	27mm	40mm	1.3µm	6.2µm	ø4.8mm	0.96x1.28mm	285g
378-788-15	10X	0.42	15mm	20mm	0.7µm	1.6µm	ø2.4mm	0.48x0.64mm	460g
378-814-4	50X	0.75	5.2mm	4mm	0.4µm	0.49µm	ø0.48mm	0.10x0.13mm	400g
378-815-4	100X	0.90	1.3mm	2mm	0.3µm	0.34µm	ø0.24mm	0.05x0.06mm	410g

DIMENSIONS

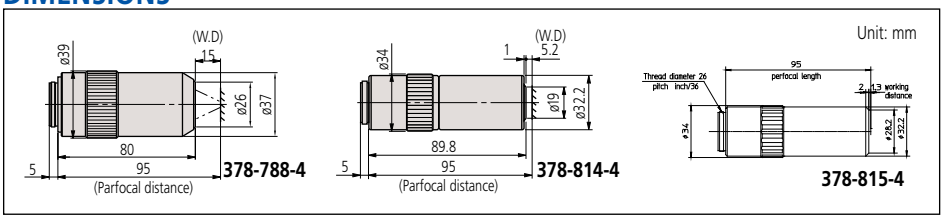

Mag.: Magnification
N.A.: Numerical aperture
W.D.: Working distance
f: Focal distance
R: Resolving power
D.F.: Focal depth
View field 1: Field of view when using ø24mm eyepiece
View field 2: Field of view when using 1/2" CCD camera

Accessories for Measuring Microscope

Glass Thickness (t = 3.5mm) Corrected G Plan Apo for Bright Field Observation

Order No.	Mag.	N.A.	W.D.	f	R	D.F.	View field 1	View field 2	Mass
378-847	20X	0.28	29.42mm*	10mm	1.0μm	3.5μm	ø1.2mm	0.24x0.32mm	270g
378-848-3	50X	0.50	13.89mm*	4mm	0.6μm	1.1μm	ø0.48mm	0.10x0.13mm	320g

*In air

DIMENSIONS

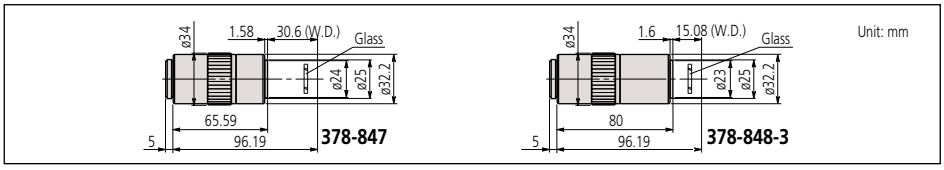

Note:
The G Plan Apo Series are designed for observing a workpiece through BK-7 glass (thickness = 3.5mm).

BD Plan Apo for Bright/Dark Field Observation

Order No.	Mag.	N.A.	W.D.	f	R	D.F.	View field 1	View field 2	Mass
378-831-13	2X	0.055	34.0mm	100mm	5.0μm	91μm	ø12mm	2.4x3.2mm	340g
378-831-13	5X	0.14	34.0mm	40mm	2.0μm	14.0μm	ø4.8mm	0.96x1.28mm	350g
378-830-7	7.5X	0.21	34.0mm	26.67mm	1.3μm	6.2μm	ø3.6mm	0.64x0.85mm	350g
378-833-7	10X	0.28	34.0mm	20mm	1.0μm	3.5μm	ø2.4mm	0.48x0.64mm	350g
378-834-7	20X	0.42	20.0mm	10mm	0.7μm	1.6μm	ø1.2mm	0.24x0.32mm	400g
378-835-7	50X	0.55	13.0mm	4mm	0.5μm	0.9μm	ø0.48mm	0.10x0.13mm	440g
378-836-7	100X	0.70	6.0mm	2mm	0.4μm	0.6μm	ø0.24mm	0.05x0.06mm	460g

DIMENSIONS

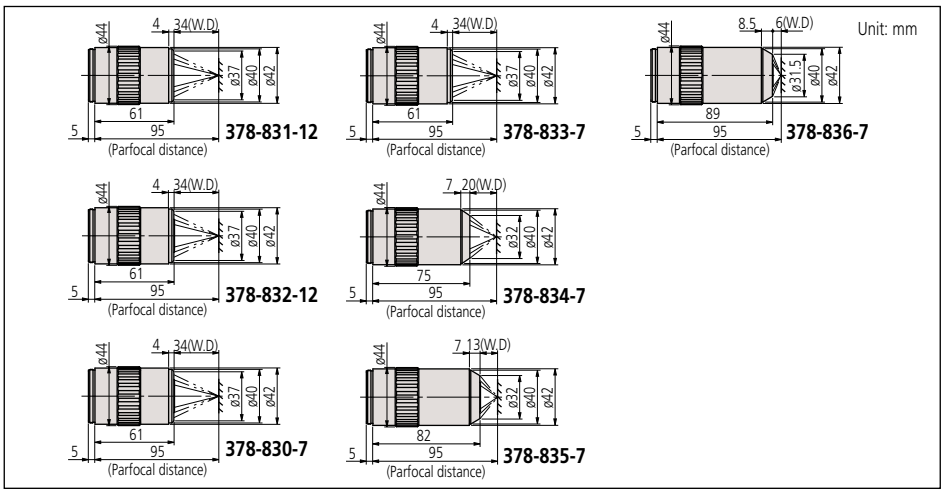

Find a Distributor

BD Plan Apo SL for Bright/Dark Field Observation

Order No.	Mag.	N.A.	W.D.	f	R	D.F.	View field 1	View field 2	Mass
378-840-7	20X	0.28	30.5mm	10mm	1.0μm	3.5μm	ø1.2mm	0.24x0.32mm	350g

DIMENSIONS

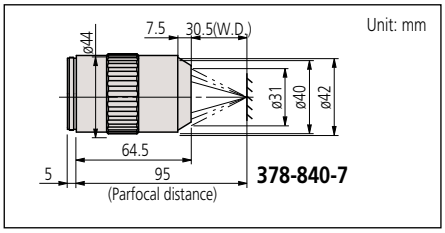

Note:
These objectives offer extra-long working distance.

Mag.: Magnification
N.A.: Numerical aperture
W.D.: Working distance
f: Focal distance
R: Resolving power
D.F.: Focal depth
View field 1: Field of view when using ø24mm eyepiece
View field 2: Field of view when using 1/2" CCD camera

Accessories for Measuring Microscope

M Plan Apo NIR B

Order No.	Mag.	N.A.	W.D. (mm)	f (mm) (λ=550nm)	R (μm) (λ=550nm)	±DOF (μm)	View field 1	View field 2	Mass (g)
378-867-5	20X	0.40	25.5	10	0.7	1.7	1.2	0.24×0.32	350
378-868-5	50X	0.42	25.5	4	0.7	1.6	0.48	0.10×0.13	375

> A high-transmission laser type objective suited to the fundamental and second harmonic of the YAG laser. Corrected over the visible (420nm) to near-infrared (1064nm) spectrum.

> This series of objective has greatly improved in operability thanks to the achievement of an ultra-long working distance of 25.5mm while maintaining the NA of the NIR series 20X/50X.

DIMENSIONS

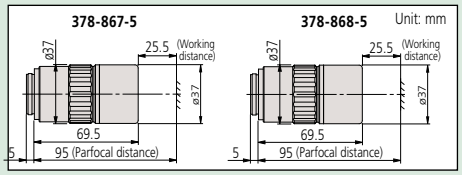

Note:
These objectives are designed so that a workpiece's image can be focused within the focal depth even when the wavelength is changed anywhere from the visible range (l = 480nm) up to near-infrared range (l = 1800nm). Therefore, the M Plan NIR Series are suitable for laser repair. However, when the wavelength used exceeds 1100nm, the focusing position may slightly deviate from that in the visible range due to changes in glass dispersion and refractive index.

Near-infrared Radiation Corrected M Plan Apo NIR for Bright Field Observation

Order No.	Mag.	N.A.	W.D.	f	R	D.F.	View field 1	View field 2	Mass
378-822-5	5X	0.14	37.5mm	40mm	2.0μm	14.0μm	ø4.8mm	0.96x1.28mm	220g
378-823-15	10X	0.26	30.5mm	20mm	1.1μm	4.1μm	ø2.4mm	0.48x0.64mm	250g
378-824-16	20X	0.40	20.0mm	10mm	0.7μm	1.7μm	ø1.2mm	0.24x0.32mm	300g
378-825-17	50X	0.42	17.0mm	4mm	0.7μm	1.6μm	ø0.48mm	0.10x0.13mm	315g
378-826-15	100X	0.50	12.0mm	2mm	0.6μm	1.1μm	ø0.24mm	0.05x0.06mm	335g
378-863-5*	50X	0.65	10mm	4mm	0.4μm	0.7μm	ø0.48mm	0.10x0.13mm	450g
378-864-15	100X	0.70	10mm	2mm	0.4μm	0.6μm	ø0.24mm	0.05x0.06mm	450g

* High Resolution (HR objectives)

DIMENSIONS

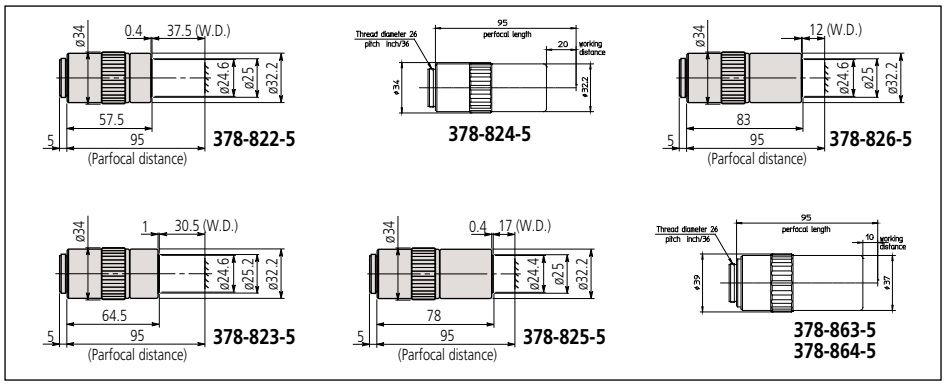

Near-ultraviolet Radiation Corrected M Plan Apo NUV for Bright Field Observation

Order No.	Mag.	N.A.	W.D.	f	R	D.F.	View field 1	View field 2	Mass
378-809-5	10X	0.28	30.5mm	20mm	1μm	3.5μm	ø2.4mm	0.48x0.64mm	255g
378-817-8	20X	0.42	17.0mm	10mm	0.7μm	1.7μm	ø1.2mm	0.24x0.32mm	340g
378-818-8	50X	0.44	15.0mm	4mm	0.7μm	1.6μm	ø0.48mm	0.10x0.13mm	350g
378-819-15	100X	0.50	11.0mm	2mm	0.6μm	1.1μm	ø0.24mm	0.05x0.06mm	380g
378-888-6*	50X	0.65	10.00mm	4mm	0.42μm	0.65μm	ø0.48mm	0.10x0.13mm	500g

*High resolution (HR objective)

DIMENSIONS

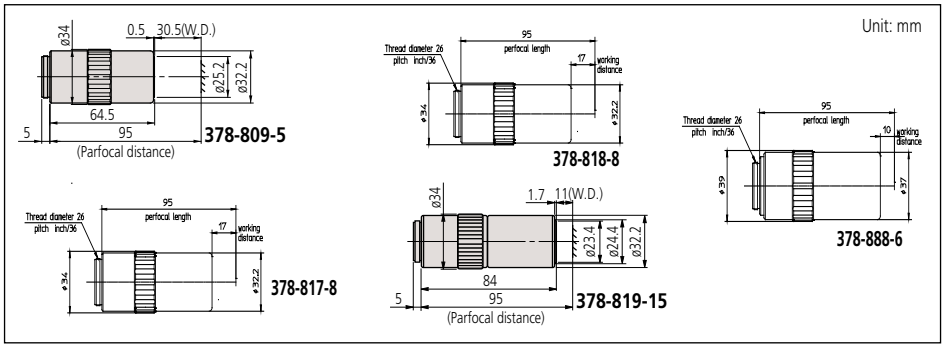

Note:
These objectives are designed so that a workpiece's image can be focused within the focal depth even when the wavelength is changed anywhere from the visible range (l = 620nm) to the near-ultraviolet range (l = 355nm). Therefore The M Plan NUV Series are suitable for laser repair using a high frequency laser beam.

Mag.: Magnification
N.A.: Numerical aperture
W.D.: Working distance
f: Focal distance
R: Resolving power
D.F.: Focal depth
View field 1: Field of view when using ø24mm eyepiece
View field 2: Field of view when using 1/2" CCD camera

Accessories for Measuring Microscope

Near-infrared Radiation and LCD Glass Thickness (t = 1.1mm or 0.7mm) Corrected LCD Plan Apo NIR for Bright Field Observation

Order No.	Mag.	N.A.	W.D.	f	R	D.F.	View field 1	View field 2	Mass
378-821-16	20X (t0.7)	0.40	20mm*	10mm	0.7μm	1.7μm	ø1.2mm	0.24x0.32mm	305g
378-827-16	20X (t1.1)	0.40	19.98mm*	10mm	0.7μm	1.7μm	ø1.2mm	0.24x0.32mm	305g
378-828-16	50X (t1.1)	0.42	17.13mm*	3.9mm	0.7μm	1.6μm	ø0.48mm	0.10x0.13mm	320g
378-829-5	50X (t0.7)	0.42	17.26mm*	3.9mm	0.7μm	1.6μm	ø0.48mm	0.10x0.13mm	320g
378-754-15	100X (t0.7)	0.50	12.06mm*	2mm	0.6μm	1.1μm	ø0.24mm	0.05x0.06mm	335g

*In air

DIMENSIONS

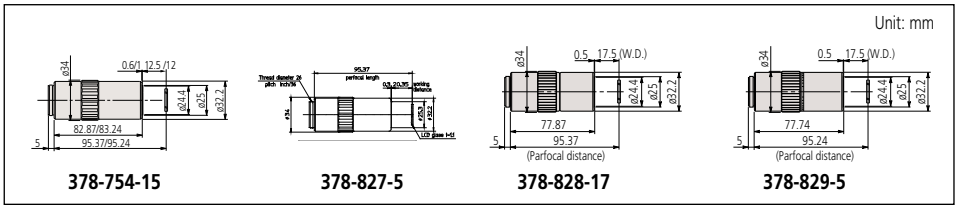

Note:
These near-infrared (l = 1800nm) corrected objectives are designed for observing a workpiece through LCD glass (thickness = 1.1mm (**378-827-5**, **378-828-5, 378-752-5**) or 0.7mm (**378-829-5**, **378-754-5**) and for laser repair.

Near-ultraviolet Radiation and LCD Glass Thickness (t = 0.7mm) Corrected LCD Plan Apo NUV for Bright Field Observation

Order No.	Mag.	N.A.	W.D.	f	R	D.F.	View field 1	View field 2	Mass
378-890-8	20X (t0.7)	0.42	16.96mm*	10mm	0.7μm	1.7μm	ø1.2mm	0.24x0.32mm	340g
378-891-6**	50X (t0.7)	0.65	9.76mm*	4mm	0.42μm	0.65μm	ø0.48mm	0.10x0.13mm	500g
378-820-8	50X (t0.7)	0.44	14.76mm*	4mm	0.7μm	1.6μm	ø0.48mm	0.10x0.13mm	310g
378-751-4	100X(t1.1)	0.50	11.03mm	2mm	0.6μm	1.1μm	ø0.24mm	0.05x0.06mm	380g

* In air
** High-Resolution (HR Objectives)

DIMENSIONS

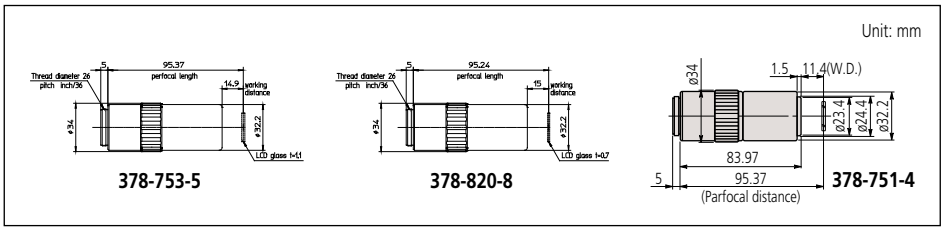

Note:
These near ultraviolet corrected objectives are designed for observing a workpiece through LCD glass (thickness = 1.1mm (**378-753-6, 378-751-4**) or 0.7mm (**378-820-6**) and for laser repair.

Ultraviolet Radiation Corrected M Plan UV for Bright Field Observation

Order No.	Mag.	N.A.	W.D.	f	R	D.F.	View field 1	View field 2	Mass
378-844-15	10X	0.25	20mm	20mm	1.1μm	4.4μm	ø2.4mm	0.48x0.64mm	310g
378-837-8	20X	0.37	15.0mm	10mm	0.8μm	2.1μm	ø1.2mm	0.24x0.32mm	330g
378-838-8	50X	0.41	12.0mm	4mm	0.7μm	1.7μm	ø0.48mm	0.10x0.13mm	400g
378-839-5	80X	0.55	10.0mm	2.5mm	0.5μm	0.9μm	ø0.3mm	0.06x0.08mm	380g

DIMENSIONS

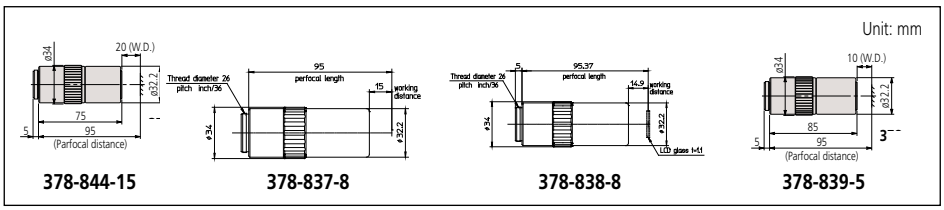

Note:
These ultraviolet corrected objectives are designed so that a workpiece's image can be focused within the focal depth even when the wavelength is changed anywhere from the visible range (l = 550nm) to the ultraviolet range (l = 266nm). Therefore the M Plan UV Series are suitable for laser repair using a high-frequency laser beam.

Mag.: Magnification
N.A.: Numerical aperture
W.D.: Working distance
f: Focal distance
R: Resolving power
D.F.: Focal depth
View field 1: Field of view when using ø24mm eyepiece
View field 2: Field of view when using 1/2" CCD camera

Digital Imaging with Software

Order No.	Description
64PMI247	Moticam S1, 1.2 Megapixel, 1/3" Sensor, USB
64PMI249	Moticam S3, 3 Megapixel, 1/2.8", USB
64PMI248	Moticam S6, 6MP, 1/1.8" Sensor, USB
64PMI309	Moticam 4000x, 8MP, 1/1.8" Sensor, USB/ HDMI Output
64PMI310	Moticam BMH4000X, 1/2.8" Sensor, USB/ HDMI output, built-in 11" screen

64PMI247

64PMI248

64PMI249

64PMI310

Got Questions?

MSM-400
SERIES 377 — Stereo Microscopes

- Continuous 1X - 4X magnification
- Image always in focus throughout zoom range
- Crisp, erect images with high resolution and excellent stereoscopic effect
- Stereo-tube can be rotated a full 360° for viewing at any angle
- Bilateral zoom control knob adds convenience and increases operator efficiency
- Diopter adjustment for both eyepieces
- Binocular tube inclination: 45°
- Focusing range: 1.46" (37mm)
- LED Illumination
- Interpupillary adjustable range: 2.12" - 2.99" (54mm - 76mm)
- The MSM-414L is a traditional binocular stereo microscope for industrial, medical and classroom applications. It is ideal for electrical small part inspection, assembly, and medical/ biological dissection.

377-993A

SPECIFICATIONS

Model.	MSM-414L	MSM-414TL
Order No.	**377-992A**	**377-993A**
Optical tube	Binocular	Trinocular
Total magnification	10X - 40X	
Eyepiece	10X (377-016)	
Objective	1X - 4X	
Working distance	80mm	
Field of view	20mm - 5mm	
Dimensions	H=13.2"x W=6.7"x D=9.3"	
Mass	13.2 lbs (6kg)	

Microscopes

Stereo Microscope — Parts Breakdown

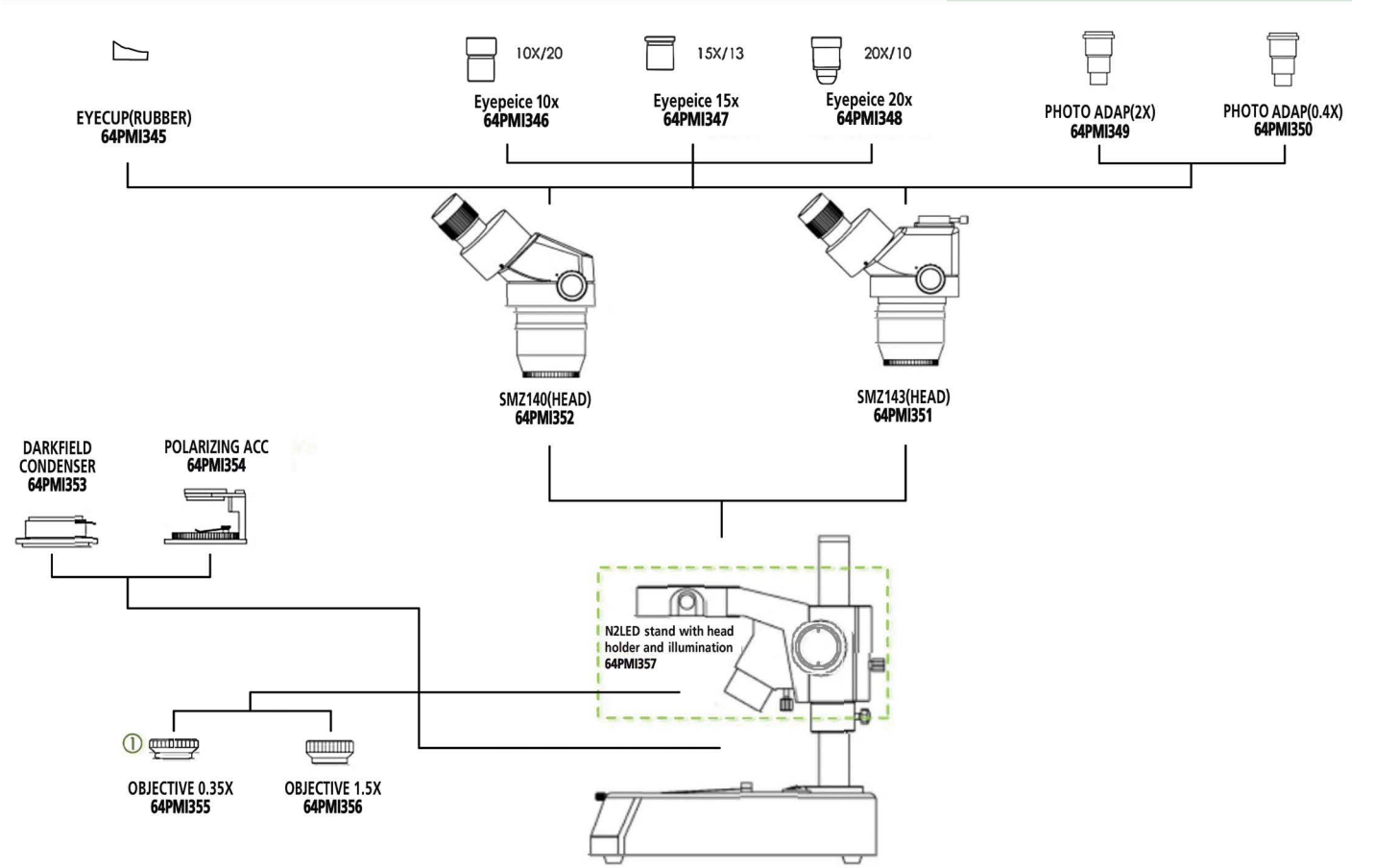

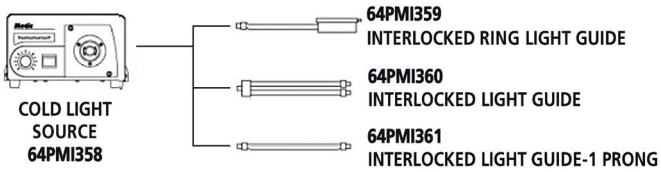

Talk to Sales

8x Pocket Comparator Sets SERIES 183

- 8x Eyepiece which includes a set of reticles for dimensional, angle and other types of measurements.
- Illuminator (**950757**) is available.

183-101

Pocket Comparator 8X with Reticles Set

Set No.	
183-901	183-101, 183-106
183-902	183-101, 183-102, 183-106, 183-107, 183-112, 183-113, 183-114
183-903	183-101, 183-102, 183-106, 183-107, 183-109, 183-113, 183-115
183-904	183-101, 183-102

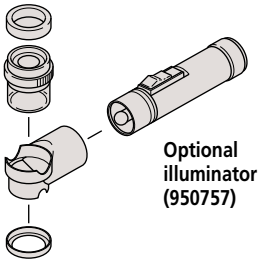

Optional Reticles for Pocket Comparators

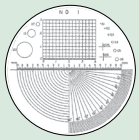

183-102

183-104

183-106

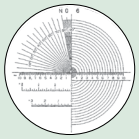

183-107

183-109

183-110

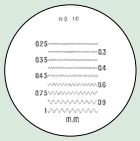

183-111

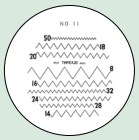

183-112

183-113

183-114

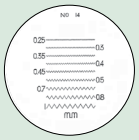

183-115

Zoom Loupe SERIES 183

- Allows the user 8X - 16X zoom observation.
- Magnification indicator is provided for 8X, 10X, 12X, 14X and 16X observation.
- Metric and inch scales are provided for measuring.
- Comes with a carrying case.

183-304

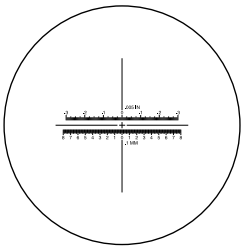

Reticle provided

SPECIFICATIONS

Magnification	Order No.	Remarks
8X - 16X	**183-304**	With reticle (Scale graduation: 0.1mm, .005")

Clear Loupe SERIES 183

183-310

183-312

SPECIFICATIONS

Magnification	Order No.	Remarks
5X	**183-310**	Drawtube removable
15X	**183-312**	Drawtube removable

Numerical Aperture (NA)

The NA figure is important because it indicates the resolving power of an objective lens. The larger the NA value the finer the detail that can be seen. A lens with a larger NA also collects more light and will normally provide a brighter image with a narrower depth of focus than one with a smaller NA value.

$$NA = n \cdot \sin\theta$$

The formula above shows that NA depends on N, the refractive index of the medium that exists between the front of an objective and the specimen (for air, n=1.0), and angle θ, which is the half-angle of the maximum cone of light that can enter the lens.

Resolving Power (R)

The minimum detectable distance between two image points, representing the limit of resolution. Resolving power (R) is determined by numerical aperture (NA) and wavelength (λ) of the illumination.

$$R = \frac{\lambda}{2 \cdot NA} \ (\mu m)$$

λ = 0.55μm is often used as the reference wavelength

Working Distance (W.D.)

The distance between the front end of a microscope objective and the surface of the workpiece at which the sharpest focusing is obtained.

Parfocal Distance

The distance between the mounting position of a microscope objective and the surface of the workpiece at which the sharpest focusing is obtained. Objective lenses mounted together in the same turret should have the same parfocal distance so that when another objective is brought into use the amount of refocusing needed is minimal.

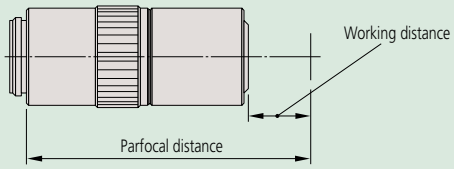

Infinity Optical System

An optical system where the objective forms its image at infinity and a tube lens is placed within the body tube between the objective and the eyepiece to produce the intermediate image. After passing through the objective, the light effectively travels parallel to the optical axis to the tube lens through what is termed the infinity space within which auxiliary components can be placed, such as differential interference contrast (DIC) prisms, polarizers, etc., with minimal effect on focus and aberration corrections.

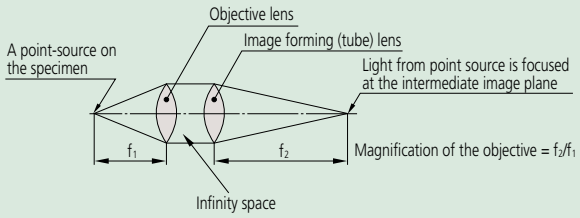

Finite Optical System

An optical system that uses an objective to form the intermediate image at a finite position. Light from the workpiece passing through the objective is directed toward the intermediate image plane (located at the front focal plane of the eyepiece) and converges in that plane.

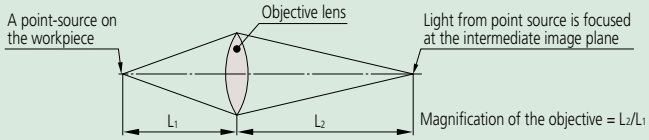

Focal Length (f)

unit: mm

The distance from the principal point to the focal point of a lens: if f1 represents the focal length of an objective and f2 represents the focal length of an image forming (tube) lens then magnification is determined by the ratio between the two. (In the case of the infinity-correction optical system.)

$$\text{Objective magnification} = \frac{\text{Focal length of the image-forming (tube) lens}}{\text{Focal length of the objective}}$$

Example: $1X = \frac{200}{200}$ Example: $10X = \frac{200}{20}$

Focal Point

Light rays traveling parallel to the optical axis of a converging lens system and passing through that system will converge (or focus) to a point on the axis known as the rear focal point or image focal point.

Depth of Focus (DOF)

unit: mm

Also known as depth of field, this is the distance (measured in the direction of the optical axis) between the two planes which define the limits of acceptable image sharpness when the microscope is focused on an object. As the numerical aperture (NA) increases, the depth of focus becomes shallower, as shown by the expression below:

$$DOF = \frac{\lambda}{2 \cdot (NA)^2}$$

λ = 0.55μm is often used as the reference wavelength

Example: For an **M Plan Apo 100X** lens (NA = 0.7)
The depth of focus of this objective is

$$\frac{0.55\mu m}{2 \times 0.7^2} = 0.6\mu m$$

Bright-field Illumination and Dark-field Illumination

In brightfield illumination a full cone of light is focused by the objective on the specimen surface. This is the normal mode of viewing with an optical microscope. With darkfield illumination, the inner area of the light cone is blocked so that the surface is only illuminated by light from an oblique angle. Darkfield illumination is good for detecting surface scratches and contamination.

Apochromat and Achromat Objectives

An apochromat objective is a lens corrected for chromatic aberration (color blur) in three colors (red, blue, yellow).
An achromat objective is a lens corrected for chromatic aberration in two colors (red, blue).

Magnification

The ratio of the size of a magnified object image created by an optical system to that of the object. Magnification commonly refers to lateral magnification although it can mean lateral, vertical, or angular magnification.

Principal Ray

A ray considered to be emitted from an object point off the optical axis and passing through the center of an aperture diaphragm in a lens system.

Aperture Diaphragm

An adjustable circular aperture which controls the amount of light passing through a lens system. It is also referred to as an aperture stop and its size affects image brightness and depth of focus.

Field Stop

A stop which controls the field of view in an optical instrument.

Telecentric System

An optical system where the light rays are parallel to the optical axis in object and/or image space. This means that magnification is nearly constant over a range of working distances, therefore, almost eliminating perspective error.

Erect Image

An image in which the orientations of left, right, top, bottom and moving directions are the same as those of a workpiece on the workstage.

Field number (FN), real field of view, and monitor display magnification

unit: mm

The observation range of the sample surface is determined by the diameter of the eyepiece's field stop. The value of this diameter in millimeters is called the field number (FN). In contrast, the real field of view is the range on the workpiece surface when actually magnified and observed with the objective lens.
The real field of view can be calculated with the following formula:

(1) The range of the workpiece that can be observed with the microscope (diameter)

$$\text{Real field of view} = \frac{\text{FN of eyepiece}}{\text{Objective lens magnification}}$$

Example: The real field of view of a 1X lens is $24 = \frac{24}{1}$

The real field of view of a 10X lens is $2.4 = \frac{24}{10}$

(2) Monitor observation range

$$\text{Monitor observation range} = \frac{\text{The size of the camera image sensor (diagonal length)}}{\text{Objective lens magnification}}$$

• Size of image sensor

Format	Diagonal length	Length	Height
1/3″	6.0	4.8	3.6
1/2″	8.0	6.4	4.8
2/3″	11.0	8.8	6.6

(3) Monitor display magnification

Monitor display magnification =

$$\text{Objective lens magnification} \times \frac{\text{Display diagonal length on the monitor}}{\text{Diagonal length of camera image sensor}}$$

Mitutoyo

Featured Products

Surface Roughness Measurement (Surface Texture Measuring Instruments)

SJ-220/310/410/500/2100 Series

Refer to page J-3 for details

FORMTRACER Avant (Contour Measuring Instruments)

C3000/4000 Series

Refer to page J-10 for details.

FORMTRACER Avant

(Contour & Surface Texture Measuring Instruments)

FTA-H3000 Series

Refer to page J-12 for details.

ROUNDTRACER Extreme

(CNC Roundness/Cylindricity Measuring System)

RTX-0605-A

Refer to page J-25 for details.

ROUNDTRACER Flash (Optical Shaft Measuring System)

S-100 / 300 Series

Refer to page J-25 for details

J

Form Measurement

INDEX

Surftest (Surface Roughness Testers)

SJ-220	J-3
SJ-310	J-3
Optional Accessories for SJ-220	J-4
SJ-410	J-5
SJ-500/SV-2100	J-6

Surftest (CNC Surface Roughness Testers)

SV-3000CNC/SV-M3000CNC	J-7

Contracer (Contour Measuring Instruments)

CV-2100	J-8

Formtracer Avant Series

FORMTRACER Avant S3000 Series	J-9
FORMTRACER Avant C3000/4000 Series	J-10
FORMTRACER Avant D3000/4000 Series	J-11
FORMTRACER Avant H3000 Series	J-12

Formtracer Extreme (CNC Contour & Surface Texture Measuring Systems)

SV-C4500CNC	J-13
CS-5000CNC/CS-H5000CNC	J-14
FORMTRACER Dedicated Software	J-15,16
Quick Guide to Precision Measuring Instruments (Surface Roughness Testers)	J-17,18
Quick Guide to Precision Measuring Instruments (Contour Measuring Instruments)	J-19,20

Roundtest (Roundness/Cylindricity Measuring Instruments)

RA-120/120P	J-21
RA-1600M	J-22
RA-2200	J-22
RA-H5200	J-23
RA-2200 PLUS	J-23
RA-H5200 PLUS	J-24

ROUNDTRACER EXTREME (CNC Roundness/ Cylindricity Measuring Systems)

RTX-0605-A	J-25
ROUNDPAK	J-26

ROUNDTRACER FLASH (Optical Shaft Measuring Systems)

S100 / 300 Series	J-25
Quick Guide to Precision Measuring Instruments	J-27,28

Mitutoyo

Surftest

MeasurLink® ENABLED
Data Management Software by Mitutoyo

Surftest SJ-220
SERIES 178 – On-site Surface Roughness Tester

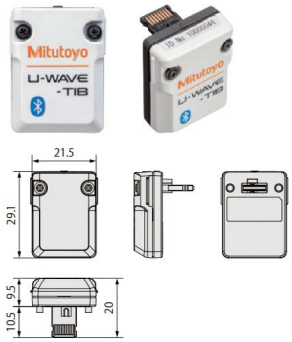

Wireless Unit for Measuring Instrument U-WAVE-TIB

264-628

It can only be used in countries where wirelesss certification has been obtained, including the country of purchase. For use in countries other than the country of purchase, please contact the nearest Mitutoyo M³ Solution Center.

Free Communication Software

Output software based on Microsoft-Excel for controlling the devices and reproducing and storing the measurement data.

Standard Accessories for SJ-220

12AAY583	Handy case
12BAA303	Connecting cable
12BAS450	AC adaptor
12BAS451	USB 2.0 cable
178-601-1	Roughness specimen (mm)
178-602-1	Roughness specimen (inch/mm)
178-605	Roughness specimen (mm) for Transverse drive
178-606	Roughness specimen (inch/mm) for Transverse drive
12BAK700	Calibration stage
12BAS476	Tool for battery switch
12AAE643	Point -contact adapter for transverse drive
12AAE644	V-type adapter for transverse drive
12AAZ222	Internal rechargeable battery

SJ Stand 178-069
(must order optional part **12AAA221** to mount **SJ-220/310** drive unit)

SPECIFICATIONS

Model No.		Standard drive unit		Retractable drive unit		Transverse tracing drive unit	
		SJ-220 (0.75 mN type)	**SJ-220** (4 mN type)	**SJ-220** (0.75 mN type)	**SJ-220** (4 mN type)	**SJ-220** (0.75 mN type)	**SJ-220** (4 mN type)
Order No.	inch/mm	**178-741-13**	**178-742-13**	**178-743-13**	**178-744-13**	**178-745-13**	**178-746-13**
Drive Unit Order No.		178-747		178-748		178-749	
Measuring range	X-axis	16.0 mm				5.6 mm	
	Detector Range	360 µm (-200 µm to +160 µm)					
	Detector Range/Resolution	360 µm/0.0256 µm, 100 µm/0.0064 µm, 25 µm/0.0016 µm					
Measuring force/Stylus tip shape		Depends on the Order No.: 0.75 mN/2 µmR 60° 4 mN/5 µmR 90°					
Applicable standards		JIS B 0601:1982 / 1994 / 2013 JIS B 0671:2002 JIS B 0631:2000 ISO 4287:1997 ISO 13565:1996 ISO 12085:1996 ISO 21920:2021 ASME B46.1 VDA2006					
Assessed profile		Primary profile, Roughness profile, DF profile, Roughness motif profile					

Surftest SJ-310
SERIES 178 — On-site Surface Roughness Tester

SPECIFICATIONS

Model No.		Standard drive unit		Retractable drive unit		Transverse tracing drive unit	
		SJ-310 (0.75 mN type)	**SJ-310** (4 mN type)	**SJ-310** (0.75 mN type)	**SJ-310** (4 mN type)	**SJ-310** (0.75 mN type)	**SJ-310** (4 mN type)
Order No.	inch/mm	**178-571-21A**	**178-571-22A**	**178-573-21A**	**178-573-22A**	**178-575-21A**	**178-575-22A**
Drive unit Order No.		178-747		178-748		178-749	
Measuring range	X-axis	16.0 mm				5.6 mm	
	Detector Range	360 µm (-200 µm to +160 µm)					
	Detector Range/Resolution	360 µm/0.0256 µm, 100 µm/0.0064 µm, 25 µm/0.0016 µm					
Measuring force/Stylus tip shape		Depends on the Order No.: 0.75 mN/2 µmR 60° (when the Order No. ends with "**-21**") 4 mN/5 µmR 90° (when the Order No. ends with "**-22**")					
Applicable standards		JIS B 0601:2001, JIS B 0601:1994, JIS B 0601:1982, VDA, ISO:1997, ANSI					
Assessed profile		Primary profile, Roughness profile, DF profile, Roughness motif profile, Waviness motif profile					

MeasurLink® ENABLED
Data Management Software by Mitutoyo

Standard Accessories for SJ-310

12AAW066	Connecting cable for Drive unit to Display unit
178-602	Roughness reference specimen (Ra3 µm)
178-606	Roughness reference specimen (Ra1 µm) (For Transverse Drive Type only)
357651	AC adapter
12AAA217	Nosepiece for plane surface
12AAA218	Nosepiece for cylinder
12AAA216	Supporting leg
12AAE643	Point-contact adapter (For Transverse Drive Type only)
12AAE644	V-type adapter (For Transverse Drive Type only)
12BAK700	Calibration stage
12BAG834	Stylus pen
12BAL402	Protection sheet
270732	Printer paper (5 pieces)
12BAL400	Carrying case
12AAN046	Internal rechargeable battery pack

Philips screwdriver, strap for stylus pen, operation manual, quick reference manual, warranty.

Optional Accessories for Surftest SJ-220/310

Detector

Unit: mm

• Standard detectors

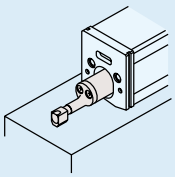

Order No.	Measuring force	Stylus profiles*	Remarks
178-296	0.75 mN	2 µmR/60°	Dedicated to the standard/retractable drive unit
178-390	4 mN	5 µmR/90°	
178-387	0.75 mN	2 µmR/60°	Dedicated to the transverse tracing drive unit
178-386	4 mN	5 µmR/90°	
178-391	4 mN	10 µmR/90°	Dedicated to the standard/retractable drive unit

*Tip radius/Tip angles

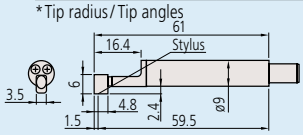

• Gear-tooth surface detectors

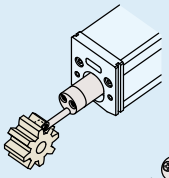

Order No.	Measuring force	Stylus profiles*
178-388	0.75 mN	2 µmR/60°
178-398	4 mN	5 µmR/60°

*Tip radius/Tip angles

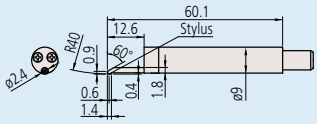

• Small hole detectors

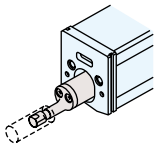

Order No.	Measuring force	Stylus profiles*	Remarks
178-383	0.75 mN	2 µmR/60°	Minimum measurable hole diameter: ø4.5 mm
178-392	4 mN	5 µmR/90°	

*Tip radius/Tip angles

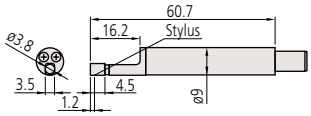

• Extra small hole detectors

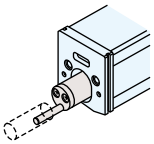

Order No.	Measuring force	Stylus profiles*	Remarks
178-384	0.75 mN	2 µmR/60°	Minimum measurable hole diameter: ø2.8 mm
178-393	4 mN	5 µmR/90°	

*Tip radius/Tip angles

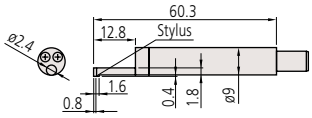

• Deep groove detectors

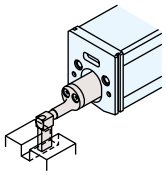

Order No.	Measuring force	Stylus profiles*	Remarks
178-385	0.75 mN	2 µmR/60°	Not available for the transverse tracing drive unit
178-394	4 mN	5 µmR/90°	

*Tip radius/Tip angles

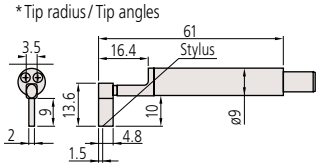

Optional Accessories for Drive Units

• Nosepiece for flat surfaces

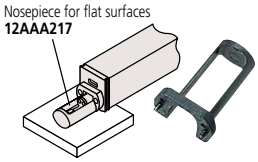

12AAA217
- Standard accessory for the standard/retractable drive unit of the **SJ-310** Series
- Not available for the transverse tracing drive unit

• Nosepiece for cylindrical surfaces

12AAA218
- Standard accessory for the standard/retractable drive unit of the **SJ-310** Series
- Not available for the transverse tracing drive unit

• V-type adapter

12AAE644
- Transverse tracing type standard accessory
- Dedicated to the transverse tracing drive unit

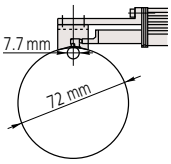

• Point-contact adapter

12AAE643
- Transverse tracing type standard accessory
- Dedicated to the transverse tracing drive unit

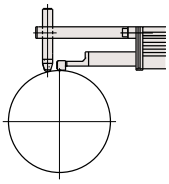

• Extension rod (50 mm) (Note: Only one rod can be used.)

12AAA210
- Not available for the transverse tracing drive unit
- Not applicable to upward measurement

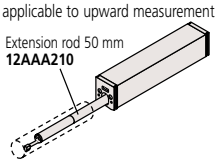

• Extension cable (1 m) (Note: Only one rod can be used.)

12BAA303
- For the connection between the calculation display unit and drive unit

• Support feet set

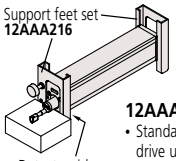

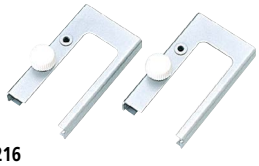

12AAA216
- Standard accessory for the standard/retractable drive unit of the **SJ-310** Series
- Not available for the transverse tracing drive unit
- Adjustment range is 28 mm from bottom face

• Adapter for flat surface

12AAA219
- Not available for the transverse tracing drive unit

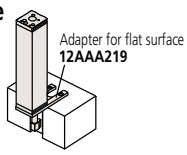

• Magnetic stand adapter

12AAA221
- Mounting spigot diameter is 8 mm

12AAA220
- Mounting spigot diameter is 9.5 mm

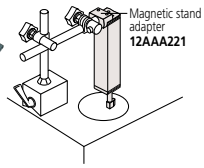

• Height gage adapter

Note: Suitable for a height gage holder designed for 9×9 mm section scribers.

12AAA222 (9x9mm)
12AAA233 (1/4x1/2")

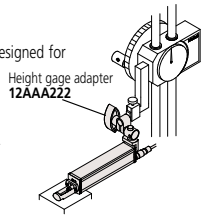

J

Surftest

Surftest SJ-410 SERIES 178 Compact Surface Roughness Tester

MeasurLink® ENABLED
Data Management Software by Mitutoyo

PROPRIETARY INSPECTION CERTIFICATE

SPECIFICATIONS

Model No.		SJ-411		SJ-412	
Order No.	inch/mm	**178-581-31A**	**178-581-32A**	**178-583-31A**	**178-583-32A**
Measuring range	X-axis	25 mm		50 mm	
	Z-axis (detector)	800 µm, 80 µm, 8 µm Up to 2,400 µm when using an optional stylus.			
Detector	Detection method	Differential inductance			
	Resolution	0.0125 µm (800 µm range), 0.00125 µm (80 µm range), 0.000125 µm (8 µm range)			
	Stylus tip shape (Angle/Radius)	60°/2 µm	90°/5 µm	60°/2 µm	90°/5 µm
	Measuring force	0.75 mN	4 mN	0.75 mN	4 mN
	Radius of skid curvature	40 mm			
	Measuring methods	Skidless/Skidded (switchable)			
Drive unit (X-axis)	Measuring speed	0.05, 0.1, 0.2, 0.5, 1.0 mm/s			
	Drive speed	0.5, 1, 2, 5 mm/s			
	Straightness	0.3 µm/25 mm		0.5 µm/50 mm	
Up/down inclination unit	Vertical travel	10 mm			
	Inclination adjustment angle	±1.5°			
Applicable standards		JIS 1982/JIS 1994/JIS 2001/ISO 1997/ANSI/VDA			
Parameter		Ra, Rq, Rz, Ry, Rp, Rv, Rt, R3z, Rsk, Rku, Rc, RPc, RSm, Rmax*1, Rz1max*2, S, HSC, RzJIS*3, Rppi, RΔa, RΔq, Rlr, Rmr, Rmr(c), Rσc, Rk, Rpk, Rvk, Mr1, Mr2, A1, A2, Vo, λa, λq, Lo, Rpm, tp*4, Htp*4, R, Rx, AR, W, AW, Wx, Wte Customizable			
Filtered profile		Primary profile, Roughness profile, DF profile, Waviness profile, Roughness motif profile, Waviness motif profile			
Analysis graph		Material ratio curve, Profile height amplitude distribution curve			
Data compensation functions		Parabola, Hyperbola, Ellipse, Circle, Tilt, No compensation			
Filter		2CR, PC75, Gaussian			
Cutoff value	λc	0.08, 0.25, 0.8, 2.5, 8 mm			
	λs *5	2.5, 8, 25 µm			
Sampling length		0.08, 0.25, 0.8, 2.5, 8, 25 mm			
Number of intervals		x1, x2, x3, x4, x5, x6, x7, x8, x9, x10, x11, x12, x13, x14, x15, x16, x17, x18, x19, x20			
Arbitrary length		0.1 to 25 mm		0.1 to 50 mm	
Calculation display unit	Customization	Selection of display/evaluation roughness parameter			
	Simplified contour analysis function	Step, Step quantity, Area, Coordinate difference			
	D.A.T. (Digimatic Adjustment Table) function	Helps to level workpiece prior to skidless measurement			
	Real sampling function	Inputs the displacement of the detector while stopping the drive unit			
	Statistical processing	Calculates the maximum value, minimum value, average value, standard deviation, pass rate and histogram for each parameter.			
	Judgment*6	Maximum value rule, 16% rule, mean value rule, standard deviation (1σ, 2σ, 3σ)			
	Storing measurement condition	Max. 10 (calculation display unit)			
	Print function (Built-in thermal printer)	Measurement condition/Calculation result/Judgment result/Calculation result per segment/Tolerance value/Evaluation curve/Graphic curve/Material ratio curve/Profile height amplitude distribution curve/Environmental setting items/Statistical result (Histogram)			
	Display language	16 languages (Japanese, English, German, French, Italian, Spanish, Portuguese, Korean, Chinese (simplified/traditional), Czech, Polish, Hungarian,Turkish, Swedish, Dutch)			
	Storage function	Built-in memory: Measurement condition (Up to 10) Memory card (optional): 500 measurement conditions, 10000 measured profiles, 500 display images, 10000 text files, 500 statistical data, 1 backup file of device setting data, 10 data of Trace 10			
	External I/O functions	USB I/F, Digimatic output, RS-232C I/F, Foot switch I/F			
Power supply	Battery Charging time/Endurance	Built-in battery (rechargeable Ni-MH battery)/AC adapter Charging time of the built-in battery: about 4 hours (may vary due to ambient temperature) Endurance: about 1000 measurements (differs slightly due to use conditions/environment)			
	Max. power consumption	50 W			
External dimensions (W×D×H)	Calculation display unit	275×198×109 mm			
	Up/down inclination unit	130.9×63×99 mm			
	Drive unit	128×35.8×46.6 mm		154.5×35.8×46.6 mm	
Mass	Calculation display unit	1.7 kg			
	Up/down inclination unit	0.4 kg			
	Drive unit	0.6 kg		0.64 kg	
Standard Accessories		Detector*7/Standard stylus*8 **178-602** Roughness specimen (Ra3 µm) **270732** Receipt paper (Standard type: 5-roll set) **12BAL402** Protective sheet for the LCD (x1 sheet) **12BAR507** Touch pen **12AAN041** Carrying case		AC adapter, Power cable, Flat-blade screwdriver, Phillips screwdriver, Hex wrench, Strap for the touch pen, Operation manual, One-sheet manual, Warranty card	

*1 Calculation is available only when selecting the VDA, ANSI, or JIS 1982 standards.
*2 Calculation is available only when selecting the ISO 1997 standard. *3 Calculation is available only when selecting the JIS 2001 standard.
*4 Calculation is available only when selecting the ANSI standard. *5 Not available when selecting the JIS 1982 standard.
*6 Only the mean value rule is available for the ANSI standard. 16% rule is not available when selecting the VDA standard.
*7 Depending on the Order No. of the **SJ-410** Series main unit, **178-396** (0.75 mN) or **178-397** (4 mN) is provided as standard.
*8 Standard stylus (**12AAC731** or **12AAB403**) supporting the provided detector is provided as standard.

Surfstand (optional accessory)

Mounted on the same large surface plate as the workpiece to be inspected, this substantially built stand can be maneuvered and adjusted to position the detector on practically any surface of the workpiece desired. The SJ-400 Series detector is carried on an adjustable-length tube mounted on an extendable arm carried by a vertically traveling carriage on the column, thus enabling positioning of the detector anywhere in the vertical plane within reach.

Order No.		64PMI307
Measuring range	Z-axis at 0 degrees	663mm max
	X-axis at 0 degrees	550mm max from base
	Theta-1 axis	180°(+90°to -90°)
	Theta-2 axis	360°(+180°to -180°)
	Depth into bore	453mm max
Dimensions	Height	986mm (not including the lifting eye)
	Width	850mm max
	Depth	280mm
	Weight	55kg
Compatible Surftests		SJ-411 & SJ-412

Optional Accessories for SJ-410 Consumables

Receipt paper Standard type (5-roll set)	**270732**
Receipt paper High-durability paper (5-roll set)	**12AAA876**
Protective sheet for the touch panel (x10 sheets)	**12AAN040**
Memory card (2 GB)	**12AAW452**
Internal rechargeable battery pack	**12AAN046**

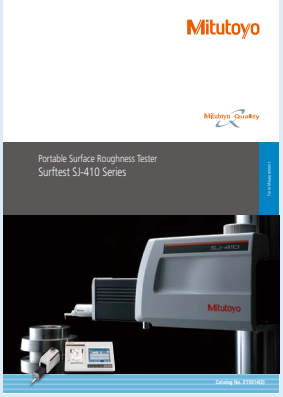

Refer to the Surftest **SJ-410** Series Brochure (**E15014-US**) for more details.

J

MeasurLink® ENABLED
Data Management Software by Mitutoyo

Surftest SJ-500/SV-2100
SERIES 178 — Dedicated Control Unit Type Surface Roughness Tester

High Precision and High Performance Type

- Surface roughness tester with a dedicated control unit.
- User-friendly display and simple operation.
- Equipped with a 7.5-inch, color TFT LCD, color icons and touch panel controls, the display unit is easy to read and simple to operate.
- A built-in joystick on the control unit allows quick and easy positioning. The manual adjustment knob allows fine positioning of a small stylus for measuring small holes.
- In addition to the roughness parameters compliant with ISO/JIS/ANSI/VDA surface roughness standards, contour analysis is also available.

SV-2100M4

SV-2100S4

SJ-500

SPECIFICATIONS

Model No.		SJ-500	SV-2100M4*1	SV-2100S4*1	SV-2100H4*1	SV-2100W4*1
Order No.	inch/mm	**178-533-11**	**178-637-11**	**178-681-01A**	**178-683-01A**	**178-685-01A**
Detector Measuring Force		**0.75mN**	**0.75mN**	**0.75mN**	**0.75mN**	**0.75mN**
Stand type		—*2	Manual stand	Motorized stand		
Measuring range	Z1-axis (detector)	800 µm, 80 µm, 8 µm				
	X-axis	50 mm	100 mm			
Resolution	X-axis	0.05 µm				
	Z1-axis (detector)	0.01 µm (800 µm), 0.001 µm (80 µm), 0.0001 µm (8 µm)				
	Z2-axis (column)	—	—	1 µm		
Assessed profile		Primary profile, Roughness profile, Waviness profile, DF profile, Roughness motif profile, Waviness motif profile				

*1 While the appearance of the natural stone measuring table varies according to the source, the high stability for which this material is known can always be relied upon.
*2 Stand for **SJ-500** is optional.

MeasurLink® ENABLED
Data Management Software by Mitutoyo

Surftest SJ-500P
SERIES 178 — Data Processing Unit (PC) Surface Roughness Testers

A Data Processing Tester with PC

- Superior data analysis for higher efficiency.

Note: If a power column type (SV-2100S4/H4/W4) with PC data-processing is required, consider the FORMTRACER Avant S3000 Series (Refer to page L-9 for specifications).

SJ-500P

FORMTRACEPAK: Best-S elling Surface Roughness Analysis Program

Best-selling dedicated software for surface roughness measurement and analysis. Features a flexible printer format and creation of an original inspection certificate.

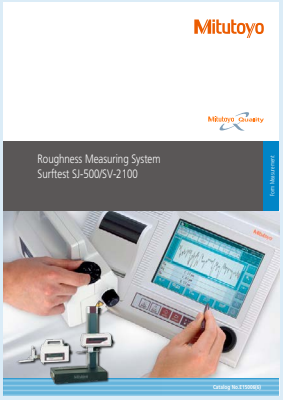

Refer to the Surftest **SJ-500**/**SV-2100** Brochure (**E15006-US**) for more details.

SPECIFICATIONS

Type of data processing unit		PC type
Model No.		**SJ-500P**
Order No.	inch/mm	**178-534-23**
Detector Measuring Force		**0.75mN**
Elevating shaft mechanism of stand		—*2
Measuring range	X-axis	50 mm
	Z1-axis (detector)	800 µm, 80 µm, 8 µm
Z2-axis (column) travel range		—
Resolution	X-axis	0.05 µm
	Z1-axis (detector)	0.01 µm (800 µm), 0.001 µm (80 µm), 0.0001 µm (8 µm)
	Z2-axis (column)	—
Applicable standards		JIS 1982/JIS 1994/JIS 2001/ISO 1997/ANSI/VDA
Assessed profile		Primary profile, Roughness profile, Waviness profile, Filtered waviness profile, Rolling circle waviness profile, Rolling circle center line waviness profile, Envelope residual profile, DIN4776 profile, Roughness motif profile, Waviness motif profile

*1 While the appearance of the natural stone measuring table varies according to the source, the high stability for which this material is known can always be relied upon.
*2 The simplified stand or manual column stand is available as an optional accessory.

Surftest

MeasurLink® ENABLED
Data Management Software by Mitutoyo

Surftest Extreme SV-3000CNC/SV-M3000CNC SERIES 178 — CNC Surface Roughness Testers

SV-3000CNC
(Inclinable drive unit + Y-axis table)

SV-M3000CNC
(Surface Roughness Tester with built-in Y-axis.)
(The photo represents a special specification model.)

- The X1, Y and Z2 axes have a maximum drive speed of 200 mm/s.
  This permits high-speed positioning that can potentially result in a large increase in the throughput of multiple-profile/multiple-workpiece measurement tasks.
- Capable of inclined plane measurement through 2 axis simultaneous control in X and Y.
- Models equipped with the Alpha-axis allow continuous measurement on horizontal and inclined surfaces by power-tilting the X1-axis.
- It is possible to expand the measuring range for multiple workpieces through positioning in the Y-axis.
- All connecting cables are contained within the measuring instrument to eliminate any inconvenience during measurement.
- Since the Z1-axis detector incorporates an anti-collision safety device, the detector unit will automatically stop if it touches a workpiece or fixture.
- Surftest Extreme **SV-M3000CNC** (CNC Surface Roughness Tester with a movable Y-axis table) that handles measurement of large/heavy workpieces, such as engine blocks or crankshafts, is also available.
- Optional external control function (Ext I/O) through bidirectional communication (RS-232C) with the PLC (programmable logic controller) is available.

SV-3000CNC SPECIFICATIONS

Model No.			SV-3000CNC			
Order No.		inch/mm	**178-508-13**	**178-528-13**	**178-509-13**	**178-529-13**
X1-axis (drive unit)	Measuring range		200 mm			
	Resolution		0.05 µm			
	Scale type		Reflective-type linear encoder			
	Drive speed	CNC mode	Max. 200 mm/s			
		Joystick mode	0 to 50 mm/s			
	Measuring speed		0.02, 0.05, 0.1, 0.2, 0.5, 1.0, 2.0 mm/s			
	Measuring direction		Pulling			
	Straightness		0.5 µm/200 mm			
Y-axis (table)	Y-axis table unit		Installed			
	Measuring range		200 mm			
	Resolution		0.05 µm			
	Drive speed	CNC mode	Max. 200 mm/s			
		Joystick mode	0 to 50 mm/s			
	Maximum table loading weight		20 kg			
Z2-axis (column)	Z2-axis vertical travel		300mm	500mm	300mm	500mm
	Resolution		0.05 µm			
	Scale type		Reflective-type linear encoder			
	Drive speed	CNC mode	Max. 200 mm/s			
		Joystick mode	0 to 50 mm/s			
Base unit	Base size (width×depth)		750×600 mm			
	Base material		-	Granite	-	-
	Alpha-axis unit		-	-	Installed	Installed

Note: While the appearance of the natural stone measuring table varies according to the source, the high stability for which this material is known can always be relied upon.

SV-M3000CNC SPECIFICATIONS

Model No.			SV-M3000CNC
Order No.		inch/mm	**178-549-1**
X1-axis (drive unit)	Measuring range		200 mm
	Resolution		0.05 µm
	Scale type		Reflective-type linear encoder
	Drive speed	CNC mode	Max. 200 mm/s
		Joystick mode	0 to 50 mm/s
	Measuring speed		0.02, 0.05, 0.1, 0.2, 0.5, 1.0, 2.0 mm/s
	Straightness	When using a standard detector	0.5 µm/200 mm
Z2-axis (column)	Measuring range		500 mm
	Resolution		0.05 µm
	Scale type		Reflective-type linear encoder
	Drive speed	CNC mode	Max. 200 mm/s
		Joystick mode	0 to 50 mm/s
Y-axis	Measuring range		800 mm
	Resolution		0.05 µm
	Scale type		Reflective-type linear encoder
	Drive speed	CNC mode	Max. 200 mm/s
		Joystick mode	0 to 50 mm/s
	Measuring speed		0.02 to 2 mm/s
	Straightness	When using a standard detector holder	Narrow range 0.5 µm/50 mm
			Wide range 2 µm/800 mm
Base unit	Base size (width×depth)		600×1500 mm
	Base material		Steel
	Maximum table loading		300 kg

Find a Distributor

Refer to the CNC Form Measuring Instrument Series Brochure (**E15021-US**) for more details.

J

MeasurLink® ENABLED
Data Management Software by Mitutoyo

SERIES 218 — Contour Measuring Instruments

CV-2100M4

Contour Measuring System

Measurement that is fast, accurate, and easy.

- The operation flow is significantly shortened by arranging the controls for stylus position change, measurement start/stop and return on the front of the drive unit.

Centralized front control panel

- Fine and coarse X-axis positioning can be performed easily by using the jog shuttle that covers the whole measuring range.

Motor-driven jog shuttle

- The quick-vertical-motion stand allows operators to swiftly and easily move the drive unit to and from the measurement height without having to push or pull (only for CV-2100M4).

Quick-vertical-motion stand

- The detector unit (Z1-axis) is equipped with a highly accurate arc scale. This scale directly tracks the arc locus of the stylus tip so that the most accurate compensation can be applied to the scale output, which leads to higher accuracy and resolution. Operators are free from bothersome operations such as measurement magnification switching and calibrating each magnification as required for analog instruments.

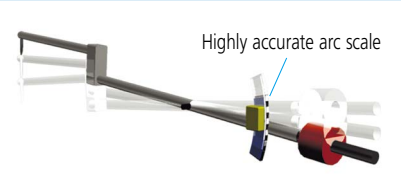

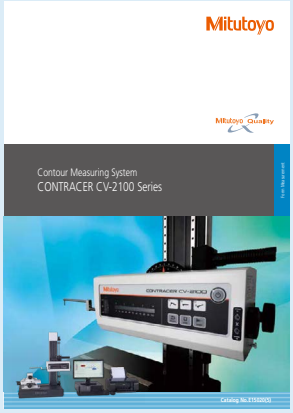

Refer to the Contracer **CV-2100** Series Brochure (**E15020-US**) for more details.

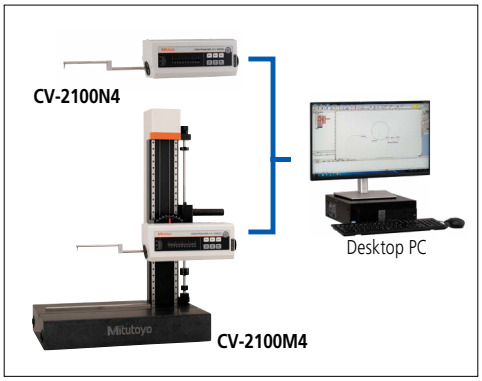

Optional Column Stand for CV-2100N4

- Allows the use of the **CV-2100N4** in a fixed configuration.

218-042

Base material: Granite
Inclination range: ±45°
Vertical travel: 320 mm
Mass: 110 kg
Note: While the appearance of the natural stone measuring table varies according to the source, the high stability for which this material is known can always be relied upon.

SPECIFICATIONS

Model No.		CV-2100M4	CV-2100N4
Order No.	inch/mm	**218-643-13**	**218-623-13**
Measuring range	X-axis	100 mm	
	Z1-axis (detector unit)	50 mm	
Z2-axis (column) travel range		350 mm	—
X-axis inclination angle		±45°	
Resolution	X-axis	0.1 µm	
	Z1-axis	0.1 µm	
Drive method	X-axis	Motor (0 to 20 mm/s)	
	Vertical travel (Z-axis column)	Manual (Quick-vertical-motion, fine)	—
Measuring speed		0.02, 0.05, 0.1, 0.2, 0.5, 1.0, 2.0, 5.0 mm/s	
Straightness (when the X-axis is horizontal)		2.5 µm/100 mm	
Accuracy (20 °C)	X-axis	±(2.5+0.02L) µm L = Measurement Length (mm)	
	Z1-axis	±(2.5+|0.1H|) µm H = Measurementt height from horizontal position within ±25 mm	
Measuring direction		Both pulling and pushing directions	
Measuring face direction		Downward direction	
Measuring force		30±10 mN (3 gf)	
Traceable angle (using the standard stylus)		Ascent 77°, Descent 87° (according to surface property)	
External dimensions (W×D×H)		745×450×885 mm	651×143×138.5 mm
Mass		145.8 kg	5.8 kg

Note 1: While the appearance of the natural stone measuring table varies according to the source, the high stability for which this material is known can always be relied upon.
Note 2: For the **CV-2100N4**, a manual column stand (optionally available) or custom fixture is required.

J

Mitutoyo

Formtracer

MeasurLink® ENABLED
Data Management Software by Mitutoyo

FORMTRACER Avant S3000 Series
SERIES 178 — Surface Roughness Measuring Instruments

FTA-S4S3000

- **FORMTRACER Avant S3000** Series are highly functional and user-friendly surface roughness measuring systems with innovative design features.
- The **FORMTRACER Avant S3000** Series includes models with inclined drive unit. Inclining the drive unit makes it easier to approach target surfaces and measure large workpieces.
- Equipped with an operability focused, new style remote box. The new part program key strongly supports manual part-programming.
- High throughput is achieved thanks to high drive speed (X-axis: Max. 80 mm/s, Z2-axis: Max. 30 mm/s) and acceleration (X-axis: 30 mm/s2).
- All connecting cables are contained within the measuring instrument to eliminate any inconvenience during measurement.
- The Z1-axis detector is equipped with a built-in anti-collision safety device.
- A variety of detector holders (optional) are available.
- A detector for measuring contours can be retrofitted.

Inclined drive unit

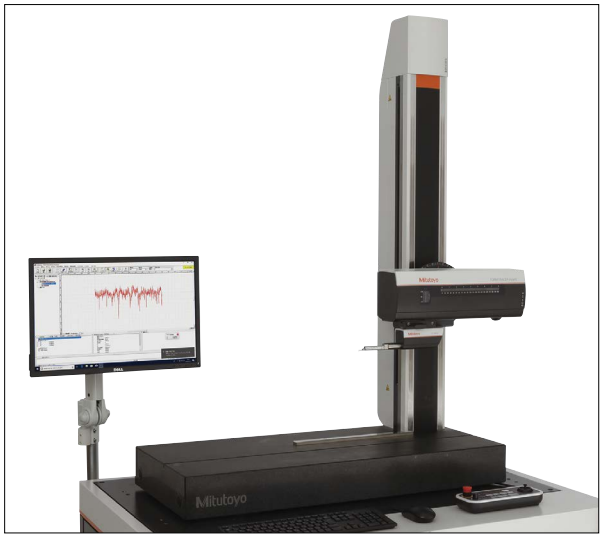

Large sized base models and high-column models are added to the line-up.

Remote box with user-friendly operability

Detector holder (optional)

Got Questions?

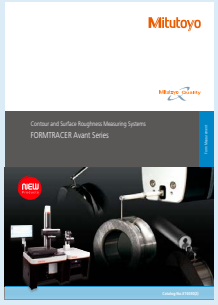

Refer to the **FORMTRACER Avant** Series Brochure (**E15030-US**) for more details.

SPECIFICATIONS

Model No.		FTA-S4S3000	FTA-H4S3000	FTA-W4S3000	FTA-L4S3000	FTA-S8S3000	FTA-H8S3000	FTA-W8S3000	FTA-L8S3000
Order No.	inch/mm	**178-151-13**	**178-152-13**	**178-153-13**	**178-154-13**	**178-156-13**	**178-157-13**	**178-158-13**	**178-159-13**
Measuring range	X-axis	100 mm				200 mm			
	Z1-axis	800 µm, 80 µm, 8 µm							
Straightness (when the X-axis is horizontal)		(0.05+0.001L) µm L = Measurement Length (mm)				(0.1+0.002L) µm L = Measurement Length (mm)			
X-axis inclination angle		±45° (Only for models with X-axis inclining drive unit)							
Z2-axis (column) travel range		300 mm	500 mm		700 mm	300 mm	500 mm		700 mm
Base size (W×D)		60×450 mm		1000×450 mm		600×450 mm		1000×450 mm	
Base material		Granite							

Note: While the appearance of the natural stone measuring table varies according to the source, the high stability for which this material is known can always be relied upon.

MeasurLink® ENABLED
Data Management Software by Mitutoyo

PROPRIETARY INSPECTION CERTIFICATE

FORMTRACER Avant C3000/4000 Series
SERIES 218 — Contour Measuring Instruments

- **FORMTRACER Avant C3000/4000** Series are highly functional and user-friendly contour measuring systems with innovative design features.
- **FORMTRACER Avant C3000/4000** Series comes with the inclined drive unit as standard, making approach to the target surface and measurement of large workpieces much easier.

Inclined drive unit

- Equipped with an operability focused, new style remote box. The new part program key strongly supports manual part-programming.
- High throughput is achieved thanks to high drive speed (X-axis: Max. 80 mm/s, Z2-axis: Max. 30 mm/s) and acceleration (X-axis: 30 mm/s2).
- All connecting cables are contained within the measuring instrument to eliminate any inconvenience during measurement.
- The Z1-axis detector is equipped with a built-in anti-collision safety device.
- A detector for measuring roughness can be retrofitted.
- The arm of the detector is a user-friendly, magnetic, one-touch, detachable mechanism.
- **C4000** type is a highly functional contour measuring system that has a wide-range digital detector (measuring range: 60 mm), top/bottom plane continuous measurement function, automatic variable measuring force function, and stylus drop detection function.

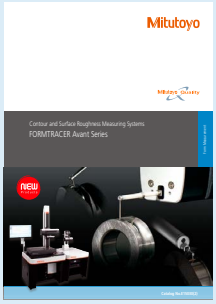

Refer to the **FORMTRACER Avant** Series Brochure (**E15030-US**) for more details.

FTA-S4C3000

FTA-S4C4000

Large-sized base models and high-column models are added to the line-up.

Remote box with user-friendly operability

Detector

SPECIFICATIONS

Model No.			FTA-S4C3000	FTA-H4C3000	FTA-W4C3000	FTA-L4C3000	FTA-S8C3000	FTA-H8C3000	FTA-W8C3000	FTA-L8C3000
			FTA-S4C4000	FTA-H4C4000	FTA-W4C4000	FTA-L4C4000	FTA-S8C4000	FTA-H8C4000	FTA-W8C4000	FTA-L8C4000
Order No.		inch/mm	218-361-13	218-362-13	218-363-13	218-364-13	218-366-13	218-367-13	218-368-13	218-369-13
			218-371-13	218-372-13	218-373-13	218-374-13	218-376-13	218-377-13	218-378-13	218-379-13
Measuring range		X-axis	100 mm				200 mm			
		Z1-axis	60 mm (±30 mm in horizontal situation)							
Straightness (when the X-axis is horizontal)			0.8 µm/100 mm				2 µm/200 mm			
Accuracy (20 °C)	**C3000**	X-axis	(0.8+0.01L) µm L = Measurement Length (mm)				(0.8+0.015L) µm L = Measurement Length (mm)			
		Z1-axis (detector unit)	±(1.2+|2H|/100) µm H = Measurement height from the horizontal position (mm)							
	C4000	X-axis	(0.8+0.01L) µm L = Measurement Length (mm)				(0.8+0.015L) µm L = Measurement Length (mm)			
		Z1-axis (detector unit)	±(0.8+|2H|/100) µm H = Measurement height from the horizontal position (mm)							
X-axis inclination angle			±45°							
Z2-axis (column) travel range			300 mm	500 mm		700 mm	300 mm	500 mm		700 mm
Base size (W×D)			600×450 mm		1000×450 mm		600×450 mm		1000×450 mm	
Base material			Granite							

Note: While the appearance of the natural stone measuring table varies according to the source, the high stability for which this material is known can always be relied upon.

J

Mitutoyo

Formtracer

MeasurLink® ENABLED
Data Management Software by Mitutoyo

FORMTRACER Avant D3000/4000 Series
SERIES 525 — Surface Roughness / Contour Measuring Instruments

FTA-S4D3000
(Detector for surface roughness measurement attaching example, Inclined drive unit, with monitor arm)

FTA-S4D4000
(Detector for form/contour measurement attaching example, Inclined drive unit, with monitor arm)

- **FORMTRACER Avant D3000/4000** Series are highly functional and user-friendly surface texture measuring systems with innovative design features. Both surface roughness measurement and contour measurement are available on a single system just by replacing the detector.
- The contour/roughness detector can be replaced without turning off the controller power and without using any tool. Furthermore, the detector is recognized automatically.
- **FORMTRACER Avant D** Series comes with the inclined drive unit as standard, making approach to the target surface and measurement of large workpieces much easier.
- Equipped with an operability focused, new style remote box. The new part program key strongly supports manual part-programming.
- High throughput is achieved thanks to high drive speed (X-axis: Max. 80 mm/s, Z2-axis: Max. 30 mm/s) and acceleration (X-axis: 30 mm/s2).
- All connecting cables are contained within the measuring instrument to eliminate any inconvenience during measurement.
- The Z1-axis detector is equipped with a built-in anti-collision safety device.
- The arm of the detector for contour measurement is a magnetic, one-touch, detachable mechanism.
- **D4000** type is a highly functional contour measuring system with a digital detector (measuring range: 60 mm) that enables a wide measurement range, top/bottom plane continuous measurement function, automatic variable measuring force function, and stylus drop detection function.

Large-sized base models and high-column models are added to the line-up.

Inclined drive unit

Connecting cables are contained within the measuring instrument.

Remote box with user-friendly operability

Detector holder (optional)

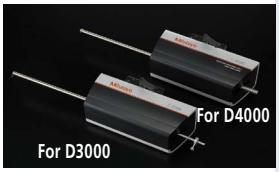

Detector

Talk to Sales

SPECIFICATIONS

Model No.			FTA-S4D3000	FTA-H4D3000	FTA-W4D3000	FTA-L4D3000	FTA-S8D3000	FTA-H8D3000	FTA-W8D3000	FTA-L8D3000
			FTA-S4D4000	FTA-H4D4000	FTA-W4D4000	FTA-L4D4000	FTA-S8D4000	FTA-H8D4000	FTA-W8D4000	FTA-L8D4000
Order No.		inch/mm	525-311-13	525-312-13	525-313-13	525-314-13	525-316-13	525-317-13	525-318-13	525-319-13
			525-321-13	525-322-13	525-323-13	525-324-13	525-326-13	525-327-13	525-328-13	525-329-13
Surface roughness measurement										
Measuring range		X-axis	100 mm				200 mm			
		Z1-axis	800 µm, 80 µm, 8 µm							
Straightness (when the X-axis is horizontal)			(0.05+0.001L) µm L = Measurement Length (mm)				(0.1+0.002L) µm L = Measurement Length (mm)			
Contour measurement										
Measuring range		X-axis	100 mm				200 mm			
		Z1-axis	60 mm (±30 mm in horizontal situation)							
Straightness (when the X-axis is horizontal)			0.8 µm/100 mm				2 µm/200 mm			
Accuracy (20 °C)	D3000	X-axis	(0.8+0.01L) µm L = Measurement Length (mm)				(0.8+0.015L) µm L = Measurement Length (mm)			
		Z1-axis (detector unit)	±(1.2+|2H|/100) µm H = Measurement height from the horizontal position (mm)							
	D4000	X-axis	(0.8+0.01L) µm L = Measurement Length (mm)				(0.8+0.015L) µm L = Measurement Length (mm)			
		Z1-axis (detector unit)	±(0.8+|2H|/100) µm H = Measurement height from the horizontal position (mm)							
Common specifications										
X-axis inclination angle			±45°							
Z2-axis (column) travel range			300 mm	500 mm		700 mm	300 mm	500 mm		700 mm
Base size (W×D)			600×450 mm		1000×450 mm		600×450 mm		1000×450 mm	
Base material			Granite							

Note: While the appearance of the natural stone measuring table varies according to the source, the high stability for which this material is known can always be relied upon.

MeasurLink® ENABLED
Data Management Software by Mitutoyo

PROPRIETARY INSPECTION CERTIFICATE

FORMTRACER Avant H3000 Series
SERIES 525 — Contour and Surface Roughness Measuring System

- **FORMTRACER Avant H3000** Series are highly functional and user-friendly surface texture measuring systems with innovative design features. They enable simultaneous measurement of both surface roughness and contour without changing the detector.
- Large-sized base models and high-column models are newly added to the line-up.
- Equipped with a wide range and high resolution Z1-axis detector.
- **FORMTRACER Avant H3000** Series comes with the inclined drive unit as standard, making approach to the target surface and measurement of large workpieces much easier.
- Equipped with an operability focused, new style remote box. The new part program key strongly supports manual part-programming.
- High throughput is achieved thanks to high drive speed (X-axis: Max. 80 mm/s, Z2-axis: Max. 30 mm/s).
- All connecting cables are contained within the measuring instrument to eliminate any inconvenience during measurement.
- The Z1-axis detector is equipped with a built-in anti-collision safety device.

FTA-H3000

FTA-H3000
(with monitor arm)

Inclinable drive unit

Detector sliding mechanism

Connecting cables are contained within the measuring instrument.

Refer to the FORMTRACER Avant Series Brochure (**E15030-US)** for more details.

Contour & Roughness Detector H3000

SPECIFICATIONS

Model No.			FTA-S4H3000	FTA-H4H3000	FTA-W4H3000	FTA-L4H3000	FTA-S8H3000	FTA-H8H3000	FTA-W8H3000	FTA-L8H3000
Order No.		inch/mm	**525-241-13**	**525-242-13**	**525-243-13**	**525-244-13**	**525-246-13**	**525-247-13**	**525-248-13**	**525-249-13**
Measuring range	X-axis		100 mm				200 mm			
	Z1-axis		16mm (±8mm from the horizontal position)							
Straightness (when the X-axis is horizontal)			0.2 µm/100 mm				0.6 µm/200 mm			
Accuracy (20 °C)	X-axis		±(0.8+0.01L) µm L = Measurement Length (mm)				(0.8+0.015L) µm L = Measurement Length (mm)			
	Z1-axis (detector unit)		±(0.5+ | 2H | /100) µm H = Measurement height from the horizontal position (mm)							
Detector (Z1-axis)	Detection method		Arc scale (RT-10µm)							
	Measuring force		0.75 mN							
	Stylus tip	Standard	Tip radius 2 µm, Tip angle 60°, Diamond (surface roughness/contour)							
		Cone	Tip radius 25 µm, Tip angle 30°, Sapphire (contour)							
	Stroke limit function		Specified range: -7mm to +7mm Positioning accuracy range: ± 1 mm							
X-axis inclination angle			±45°							
Z2-axis (column) travel range			300 mm	500 mm		700 mm	300 mm	500 mm		700 mm
Base size (W×D)			600×450 mm		1000×450 mm		600×450 mm		1000×450 mm	
Base material			Granite							

Note: While the appearance of the natural stone measuring table varies according to the source, the high stability for which this material is known can always be relied upon.

Formtracer

MeasurLink® ENABLED
Data Management Software by Mitutoyo

FORMTRACER Extreme
SV-C4500CNC
SERIES 525 — CNC Surface Roughness and Contour Measuring Systems

SV-C4500CNC
(Contour detector shown mounted together with the inclinable drive unit and Y-axis table)

SV-C4500CNC

- High-accuracy stylus type CNC Surface Roughness/ Contour Measuring System allows measurement of surface roughness and form/contour with one unit through detector replacement.
- For models with the α-axis, it is possible to perform continuous measurement over horizontal and inclined surfaces by power-tilting the X1-axis. In addition, automatic measuring force adjustment function of Z1-axis detector for contour measurement enables automatic measurement with constant measuring force even with the X1-axis tilted.
- For models with the Y-axis table, it is possible to expand the measuring range for multiple workpieces through positioning in the Y-axis direction.
- Since the Z1-axis detector incorporates an anti-collision safety device, the machine will automatically stop if the detector touches a workpiece or jig.
- Optional external control function (Ext I/O) through bidirectional communication (RS-232C) with the PLC (programmable logic controller) is available.

SPECIFICATIONS

Model No.				SV-C4500CNC			
Order No.			inch/mm	**525-701-13**	**525-702-13**	**525-703-13**	**525-704-13**
X1-axis (Drive unit)		Measuring range		200 mm			
		Resolution		0.05 µm			
		Scale type		Reflective-type linear encoder			
		Drive Speed	CNC Mode	Max. 200 mm/s			
			Joystick mode	0 to 50 mm/s			
		Measuring Speed		0.02 to 2.0 mm/s			
	Contour	Measuring direction		Pulling and Pushing			
		Straightness		2 µm / 200 mm			
		Accuracy (20 °C)		±(0.8+4L /200) µm L: Measuring length (mm)			
	Surface roughness	Measuring direction		Pulling			
		Straightness		0.5 µm / 200 mm			
Z1-axis (Detector)	Contour	Measuring range		60 mm (±30 mm from the horizontal)			
		Resolution		0.02 µm			
		Scale type		Arc			
		Accuracy (20 °C)		±(0.8+|2H| /100) µm H: Measuring height position			
	Surface roughness	Measuring range		800 µm, 80 µm, 8 µm			
		Resolution		0.01 µm, 0.001 µm, 0.0001 µm			
		Y-axis table unit		Installed			
		Measuring range		200 mm			
		Resolution		0.05 µm			
		Drive Speed	CNC mode	Max. 200 mm/s			
			Joystick mode	0 to 50 mm/s			
		Max. table loading weight		20 kg			
Z2-axis (Column)		22-axis vertical travel		300 mm		500 mm	
		Resolution		0.05 µm			
		Scale type		Reflective-type linear encoder			
		Drive speed	CNC mode	Max. 200 mm/s			
			Joystick mode	0 to 50 mm/s			
Base Unit		Base size (width x depth)		750 x 600 mm			
		Base material		Granite			
		Alpha-axis unit		-	Installed	-	Installed

Note: While the appearance of the natural stone measuring table varies according to the source, the high stability for which this material is known can always be relied upon.

Need Repair?

MeasurLink® ENABLED
Data Management Software by Mitutoyo

FORMTRACER Extreme CS-5000CNC/CS-H5000CNC SERIES 525 — CNC Surface Roughness and Contour Measuring Systems

CS-H5000CNC
(with Y-axis table)

Wide-range detector employing active control technology

- Since the Z1-axis detector incorporates an anti-collision safety device, the detector unit will automatically stop if it touches a workpiece or fixture.
- For models with the α-axis, it is possible to perform continuous measurement over horizontal and inclined surfaces by power-tilting the X1-axis. (**CS-5000CNC** only)
- For models with the Y-axis table, it is possible to expand the measuring range for multiple workpieces through positioning in the Y-axis direction.
- Optional external control function (Ext I/O) through bidirectional communication (RS-232C) with the PLC (programmable logic controller) is available.

SPECIFICATIONS

Model No.			CS-5000CNC				CS-H5000CNC		
Order No.		inch/mm	**525-727-13**	**525-729-13**	**525-747-13**	**525-749-13**	**525-777-13**	**525-706-13**	**525-707-13**
X1-axis (drive unit)	Measuring range		200 mm						
	Resolution		0.005 µm						
	Scale type		Transmission-type linear scale						
	Drive speed	CNC mode	Max. 40 mm/s						
		Joystick mode	0 to 40 mm/s						
	Measuring speed		Roughness measurement: 0.02 to 0.2 mm/s Contour measurement: 0.02 to 2.0 mm/s						
	Measuring direction		Pulling and Pushing						
	Straightness	with standard stylus	(0.1+0.0015L) µm				(0.05+0.0003L) µm		
		with 2X-long stylus	(0.2+0.0015L) µm				(0.1+0.0015L) µm		
	Accuracy (at 20 °C)		±(0.3+0.002L) µm L: Measuring length (mm)				±(0.16+0.001L) µm L: Measuring length (mm)		
Alpha-axis	Inclination range		- 45° (CCW), +10° (CW)				—		
Y-axis table	Measuring range		—	200 mm	—	200 mm	200 mm	—	200 mm
	Resolution		—	0.05 µm	—	0.05 µm	0.05 µm	—	0.05 µm
	Scale type		—	Reflection-type linear scale	—	Reflection-type linear scale	Reflection-type linear scale	—	Reflection-type linear scale
	Drive speed	CNC mode	—	Max. 200 mm/s	—	Max. 200 mm/s	Max. 200 mm/s	—	Max. 200 mm/s
		Manual mode	—	0 to 50 mm/s	—	0 to 50 mm/s	0 to 50 mm/s	—	0 to 50 mm/s
	Maximum loading mass		—	20 kg (at table center)	—	20 kg (at table center)	20 kg (at table center)	—	20 kg (at table center)
	Straightness		—	0.5 µm / 200 mm	—	0.5 µm / 200 mm	0.5 µm / 200 mm	—	0.5 µm / 200 mm
	Accuracy (at 20° C)		—	± (2+2L/100) µm	—	± (2+2L/100) µm	± (2+2L/100) µm	—	± (2+2L/100) µm
	Table size		—	200 x 200 mm	—	200 x 200 mm	200 x 200 mm	—	200 x 200 mm
	External dimensions (W x D x H)		—	320 x 646 x 105 mm	—	320 x 646 x 105 mm	320 x 646 x 105 mm	—	320 x 646 x 105 mm
	Mass		—	35 kg	—	35 kg	35 kg	—	35 kg
Z1-axis (Detector)	Measuring range	with standard stylus	12 mm						
		with 2X-long stylus	24 mm						
	Resolution	with standard stylus	0.0008 µm						
		with 2X-long stylus	0.0016 µm						
	Vertical movement of the stylus		Arc motion						
	Scale type		Transmission-type linear scale						
	Accuracy (at 20 °C)		±(0.3+|0.02H|) µm H: Probing height (mm)				±(0.07+|0.02H|) µm H: Probing height (mm)		
	Measuring force	with standard stylus	4 mN (Fixed)						
		with 2X-long stylus	0.75 mN (Fixed)						
	Traceable angle		Ascent: 60°, Descent: 60° (Depends on the surface texture)						
	Stylus tip shape	Standard stylus	Tip radius: 5 µm, Tip angle: 40°, Diamond						
		Standard ball stylus	Tip ball radius: 0.25 mm, Sapphire						
		2X-long stylus	Tip radius: 5 µm, Tip angle: 40°, Diamond						
			—				Tip radius: 2 µm, Tip angle: 60°, Diamond		
		2X-long ball stylus	Tip ball radius: 0.25 mm, Sapphire						
	Face of stylus		Downward						
Z2-axis (Column)	Travel range	Z2-axis (column)	300 mm		500 mm		300 mm	500 mm	
	Resolution		0.05 µm						
	Scale type		Reflective-type linear scale						
	Drive speed	CNC mode	Max. 200 mm/s						
		Joystick mode	0 to 50 mm/s						
Base	Base size (W×D)		800 x 600 x 1000 mm		800 x 600 x 1200 mm		800 x 600 x 1000 mm	800 x 600 x 1200 mm	
	Base material		Granite						
	Alpha-axis unit		Installed	Installed	Installed	Installed	—		

Note: While the appearance of the natural stone base varies according to the source, the high stability for which this material is known can always be relied upon.

Formtracer

Surface Roughness/Contour Analysis Program FORMTRACEPAK

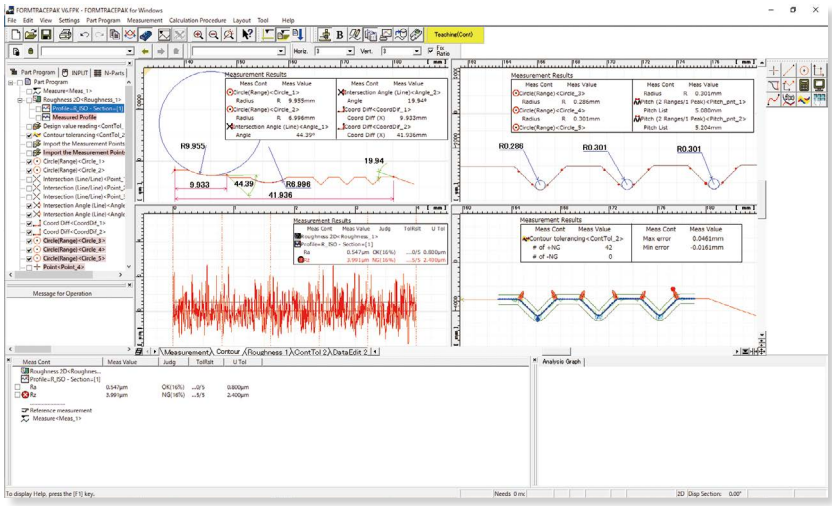

- **FORMTRACEPAK** functions offer total support for controlling the measurement system, surface roughness analysis, contour analysis, contour tolerancing, and inspection report creation.

• Editing Measurement Procedures

The items displayed in the measuremaent procedure window can be directly modified. You can, for example, perform new analyses by modifying the evaluation setup or roughness standard.

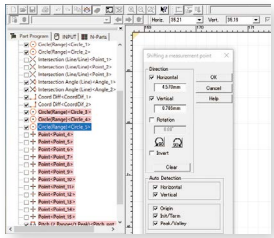

• Operation messaging

The operation message window for explaining the next step is incorporated.

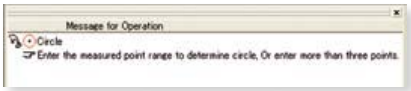

• Measurement control

To make only a single measurement, you can create a part program in the single mode. To measure multiple workpieces of an identical shape, you can use the teaching mode. Since you can embed the entire flow, from making measurement to printing a report, into a part program, you can efficiently make measurements, analyze data, and output a report. A function is also provided that enables you to insert comments accompanied with photographs at desired timings, enabling you to embed the roles described in a measurement procedure document that specifies important points such as work settings.

To make immediate measurements, you can use the pull-down menu to easily select and call up the desired operating procedure.

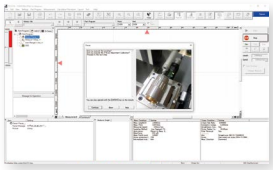

• Versatile Graphics Windowing for Data and Analysis

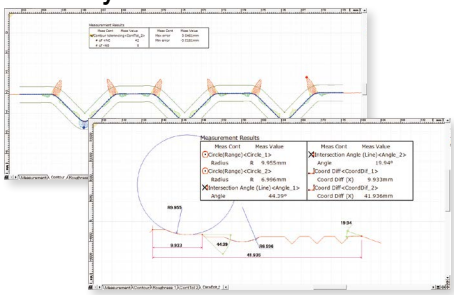

• Tab-selection graphics window

Just select a tab to display the measurement data required, such as contour, roughness, or tolerancing results.

• Dividing the screen into two or four windows

The screen can be divided into two, or four, windows for the convenient display of measurement data (for contour and roughness), analysis results, and contour tolerancing data, as required.

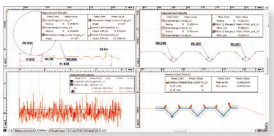

• Displaying the results in the graphics window

You can paste the graphics obtained from measurements, as well as measurement values (including pass/fail results) and an analysis graph, into the graphics window. This enables you to check the graphics and measurement results at a glance using the graphics window alone.

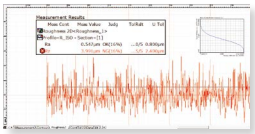

Where to Buy

Refer to the **FORMTRACEPAK** Brochure (**E15018-US**) for more details.

J

• Online help functions

Online help that can be viewed any time is incorporated into the software. In addition to index and keyword searches, a status-saving help button, which displays menus and Windows help with a click of the mouse, is provided.

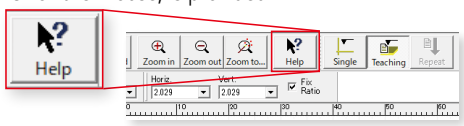

• Button-editing function

You can hide buttons that are not used frequently. For example, you can choose to display only those buttons that are used frequently and increase the size of the displayed graphics window, thereby customizing the window to suit your needs.

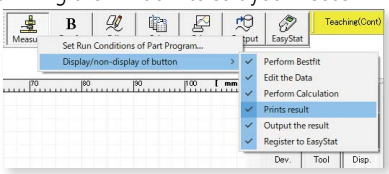

• Multiple language support (18 languages)

You can switch the language to be used in the measurement, analysis, and layout windows. After measurements have been made, you can switch to another language and create a report in that language. This function can be used worldwide.

• Simple statistical commands

You can perform statistical calculations of roughness parameters and contour analysis results without using a separate program such as Excel.

Contour Measurement

• Contour analysis

A wide variety of commands, which form the basic elements for analysis, are provided, including those for points (10 types), lines (6 types) and circles (6 types). A rich set of commands that combine these elements to calculate angles, pitches and distances as well as performing contour tolerancing and design value generation are also provided as standard features. These functions, combined with the function that enables you to customize the calculation command buttons by hiding less frequently used commands, help you to tailor the window according to the user's environment.

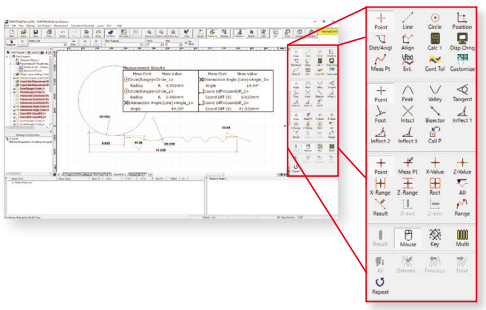

- **Contour-tolerancing as a standard feature**
- **Design value generation**
- **Data combination**
- **Simple pitch calculation**

Surface Roughness Measurement

• Surface roughness analysis

FORMTRACEPAK can perform surface roughness analyses that conform to various standards such as ISO, JIS, ANSI and VDA. For comparing measurement values with the tolerance limits, you can use the 16% rule or the maximum value rule. Furthermore, since **FORMTRACEPAK** comes with parameter calculation functions as well as a rich set of graphic analysis functions, it can be widely utilized for everything from routine quality control to R&D applications. It also includes many other functions such as the function for eliminating (compensating) shapes, such as slopes and radiused surfaces (R-surfaces), and data deletion.

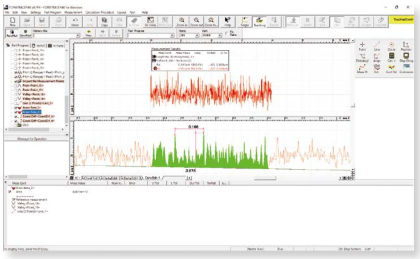

- **Micro contour analysis**
- **Simple input using drawing symbols**
- **Multiple-point measurement**
- **Analysis using multiple-point measurements**
- **Reference length dialog box**
- **Analysis condition modification with preview**
- **R-surface automatic measurement**

Refer to the **FORMTRACEPAK** Brochure (**E15018-US**) for more details.

Quick Guide to Precision Measuring Instruments

Surftest (Surface Roughness Testers)

ISO 4287: 1997 Geometrical Product Specifications (GPS) – Surface Texture: Profile method– Terms, definitions, and surface texture parameters
ISO 4288: 1996 Geometrical Product Specifications (GPS) – Surface Texture: Profile method– Rules and procedures for the assessment of surface texture
ISO 3274: 1996 Geometrical Product Specifications (GPS) – Surface Texture: Profile method– Nominal characteristics of contact (stylus) instruments
ISO 11562: 1996 Geometrical Product Specifications (GPS) – Surface texture: Profile method– Metrological characteristics of phase correct filters

Elements of Contact Type Surface Roughness Measuring Instruments

ISO 3274: 1996 (JIS B 0651: 2001)

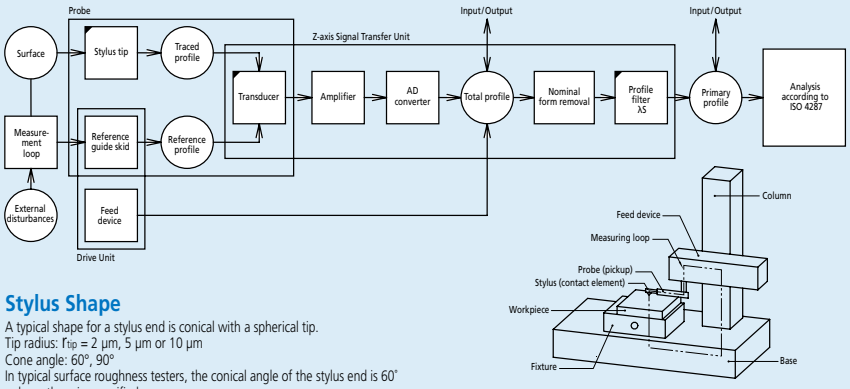

Stylus Shape

A typical shape for a stylus end is conical with a spherical tip.
Tip radius: r_{tip} = 2 µm, 5 µm or 10 µm
Cone angle: 60°, 90°
In typical surface roughness testers, the conical angle of the stylus end is 60° unless otherwise specified.

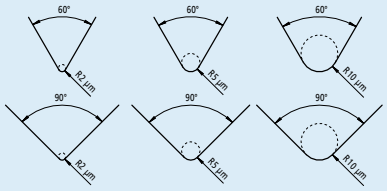

Static Measuring Force

Nominal radius of curvature of stylus tip: µm	Static measuring force at the mean position of stylus: mN	Tolerance on static measuring force variations: mN/µm
2	0.75	0.035
5	0.75 (4.0) *	0.2
10		

* The maximum value of static measuring force at the average position of a stylus is to be 4.0 mN for a probe with a special structure including a replaceable stylus.

Metrological Characterization of Phase Correct Filters

ISO 11562: 1996 (JIS B 0632: 2001)

A profile filter is a phase-correct filter without phase delay (cause of profile distortion dependent on wavelength).
The weight function of a phase-correct filter shows a normal (Gaussian) distribution in which the amplitude transmission is 50% at the cutoff wavelength.

Data Processing Flow

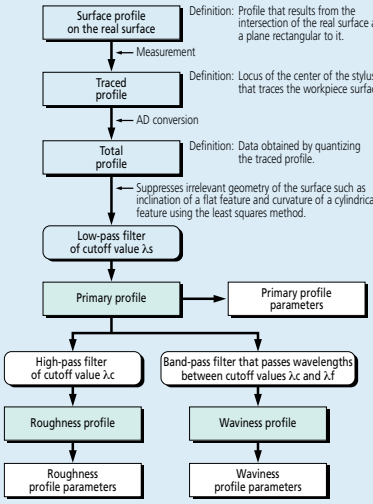

Relationship Between Cutoff Value and Stylus Tip Radius

The following table lists the relationship between the roughness profile cutoff value λc, stylus tip radius r_{tip}, and cutoff ratio λc/λs.

λc mm	λs µm	λc/λs	Maximum r_{tip} µm	Maximum sampling length µm
0.08	2.5	30	2	0.5
0.25	2.5	100	2	0.5
0.8	2.5	300	2 *1	0.5
2.5	8	300	5 *2	1.5
8	25	300	10 *2	5

*1 For a surface with Ra>0.5 µm or Rz>3 µm, a significant error will not usually occur in a measurement even if r_{tip} = 5 µm.
*2 If a cutoff value λs is 2.5 µm or 8 µm, attenuation of the signal due to the mechanical filtering effect of a stylus with the recommended tip radius appears outside the roughness profile pass band. Therefore, a small error in stylus tip radius or shape does not affect parameter values calculated from measurements. If a specific cutoff ratio is required, the ratio must be defined.

Surface Profiles

ISO 4287:1997 (JIS B 0601: 2013)

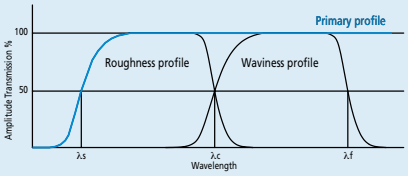

Primary Profile

Profile obtained from the measured profile by applying a low-pass filter with cutoff value λs.

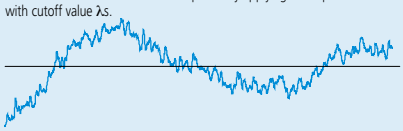

Roughness Profile

Profile obtained from the primary profile by suppressing the longer wavelength components using a high-pass filter of cutoff value λc.

Waviness Profile

Profile obtained by applying a band-pass filter to the primary profile to remove the longer wavelengths above λf and the shorter wavelengths below λc.

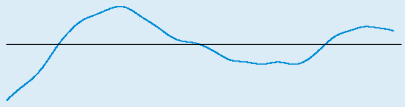

Roughness Sampling Length for Non-Periodic Profiles

ISO 4288: 1996 (JIS B 0633: 2001)

Table 1: Sampling lengths for aperiodic profile roughness parameters (*Ra*, *Rq*, *Rsk*, *Rku*, *RΔq*), material ratio curve, probability density function, and related parameters

Ra µm	Sampling length *lr* mm	Evaluation length *ln* mm
(0.006)<*Ra*≤0.02	0.08	0.4
0.02 <*Ra*≤0.1	0.25	1.25
0.1 <*Ra*≤2	0.8	4
2 <*Ra*≤10	2.5	12.5
10 <*Ra*≤80	8	40

Table 2: Sampling lengths for aperiodic profile roughness parameters (*Rz*, *Rv*, *Rp*, *Rc*, *Rt*)

Rz *Rz*1max. µm	Sampling length *lr* mm	Evaluation length *ln* mm
(0.025)<*Rz*, *Rz*1max.≤0.1	0.08	0.4
0.1 <*Rz*, *Rz*1max.≤0.5	0.25	1.25
0.5 <*Rz*, *Rz*1max.≤10	0.8	4
10 <*Rz*, *Rz*1max.≤50	2.5	12.5
50 <*Rz*, *Rz*1max.≤200	8	40

1) *Rz* is used for measurement of *Rz*, *Rv*, *Rp*, *Rc*, and *Rt*.
2) *Rz*1max. only used for measurement of *Rz*1max., *Rv*1max., *Rp*1max., and *Rc*1max..

Table 3: Sampling lengths for measurement of periodic roughness profile roughness parameters and periodic or aperiodic profile parameter *RSm*

Rsm mm	Sampling length *lr* mm	Evaluation length *ln* mm
0.013 <*RSm*≤0.04	0.08	0.4
0.04 <*RSm*≤0.13	0.25	1.25
0.13 <*RSm*≤0.4	0.8	4
0.4 <*RSm*≤1.3	2.5	12.5
1.3 <*RSm*≤4	8	40

Procedure for Determining a Sampling Length if it is not Specified

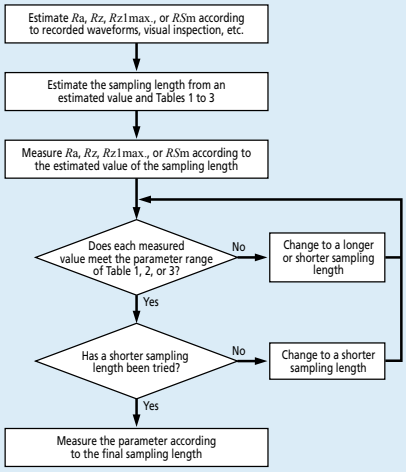

Fig.1 Procedure for determining the sampling length of an aperiodic profile if it is not specified.

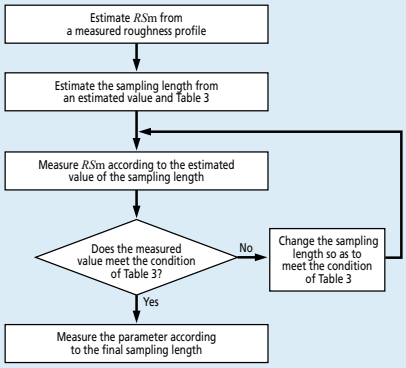

Fig.2 Procedure for determining the sampling length of a periodic profile if it is not specified.

J

Definition of Parameters

ISO 4287: 1997, Amd. 1: 2009 (JIS B 0261: 2013)

Amplitude Parameters (peak and Valley)

Maximum peak height of the primary profile Pp
Maximum peak height of the roughness profile Rp
Maximum peak height of the waviness profile Wp

Largest profile peak height Zp within a sampling length

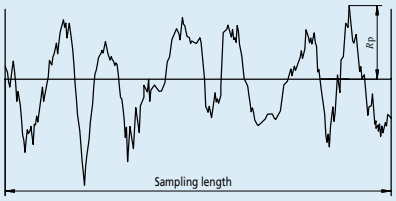

Maximum valley depth of the primary profile Pv
Maximum valley depth of the roughness profile Rv
Maximum valley depth of the waviness profile Wv

Largest profile valley depth Zv within a sampling length

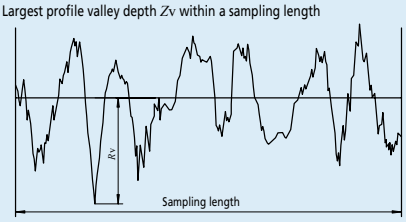

Maximum height of the primary profile Pz
Maximum height of the roughness profile Rz
Maximum height of the waviness profile Wz

Sum of height of the largest profile peak height Zp and the largest profile valley depth Zv within a sampling length

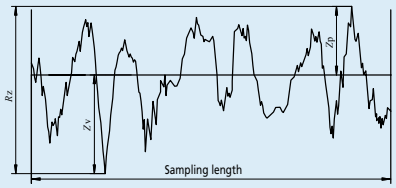

In the old JIS and ISO 4287-1: 1984, Rz was used to indicate the "ten point height of irregularities". Care must be taken because differences between results obtained according to the existing and old standards are not always negligibly small. (Be sure to check whether the drawing instructions conform to existing or old standards.)

Mean height of the primary profile elements Pc
Mean height of the roughness profile elements Rc
Mean height of the waviness profile elements Wc

Mean value of the profile element heights Zt within a sampling length

$$Pc, Rc, Wc = \frac{1}{m}\sum_{i=1}^{m} Zt_i$$

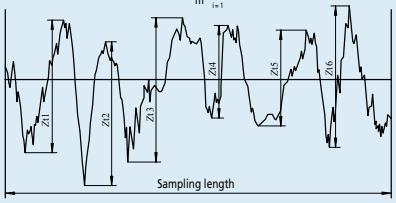

Total height of the primary profile Pt
Total height of the roughness profile Rt
Total height of the waviness profile Wt

Sum of the height of the largest profile peak height Zp and the largest profile valley depth Zv within the evaluation length

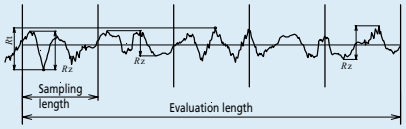

Amplitude Parameters (Average of Ordinates)

Arithmetical mean deviation of the primary profile Pa
Arithmetical mean deviation of the roughness profile Ra
Arithmetical mean deviation of the waviness profile Wa

Arithmetic mean of the absolute ordinate values Z(x) within a sampling length

$$Pa, Ra, Wa = \frac{1}{l}\int_0^l |Z(x)|dx$$

with l as lp, lr, or lw according to the case.

Root mean square deviation of the primary profile Pq
Root mean square deviation of the roughness profile Rq
Root mean square deviation of the waviness profile Wq

Root mean square value of the ordinate values Z(x) within a sampling length

$$Pq, Rq, Wq = \sqrt{\frac{1}{l}\int_0^l Z^2(x)dx}$$

with l as lp, lr, or lw according to the case.

Skewness of the primary profile Psk
Skewness of the roughness profile Rsk
Skewness of the waviness profile Wsk

Quotient of the mean cube value of the ordinate values Z(x) and the cube of Pq, Rq, or Wq respectively, within a sampling length

$$Rsk = \frac{1}{Rq^3}\left[\frac{1}{lr}\int_0^{lr} Z^3(x)dx\right]$$

The above equation defines Rsk. Psk and Wsk are defined in a similar manner. Psk, Rsk, and Wsk are measures of the asymmetry of the probability density function of the ordinate values.

Kurtosis of the primary profile Pku
Kurtosis of the roughness profile Rku
Kurtosis of the waviness profile Wku

Quotient of the mean quartic value of the ordinate values Z(x) and the fourth power of Pq, Rq, or Wq respectively, within a sampling length

$$Rku = \frac{1}{Rq^4}\left[\frac{1}{lr}\int_0^{lr} Z^4(x)dx\right]$$

The above equation defines Rku. Pku and Wku are defined in a similar manner. Pku, Rku, and Wku are measures of the sharpness of the probability density function of the ordinate values.

Spacing Parameters

Mean width of the primary profile elements PSm
Mean width of the roughness profile elements RSm
Mean width of the waviness profile elements WSm

Mean value of the profile element widths Xs within a sampling length

$$PSm, RSm, WSm = \frac{1}{m}\sum_{i=1}^{m} Xs_i$$

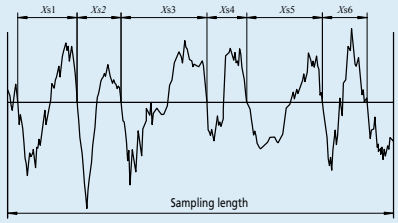

Peak count number based on the primary profile elements PPc
Peak count number based on the roughness profile elements RPc
Peak count number based on the waviness profile elements WPc

$$RPc = \frac{1}{RSm}$$

Hybrid Parameters

Root mean square slope of the primary profile $P\Delta q$
Root mean square slope of the roughness profile $R\Delta q$
Root mean square slope of the waviness profile $W\Delta q$

Root mean square value of the ordinate slope dZ/dX within a sampling length

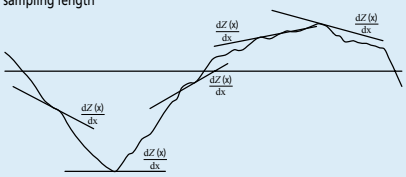

Curves, Probability Density Function, and Related Parameters

Material ratio curve of the profile (Abbott-Firestone curve)

Curve representing the material ratio of the profile as a function of section level c

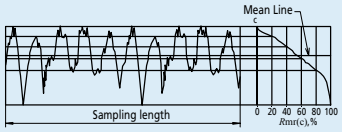

Material ratio of the primary profile $Pmr(c)$
Material ratio of the roughness profile $Rmr(c)$
Material ratio of the waviness profile $Wmr(c)$

Ratio of the material length of the profile elements $Ml(c)$ at a given level c to the evaluation length

$$Pmr(c), Rmr(c), Wmr(c) = \frac{Ml(c)}{ln}$$

Section height difference of the primary profile $P\delta c$
Section height difference of the roughness profile $R\delta c$
Section height difference of the waviness profile $W\delta c$

Vertical distance between two section levels of a given material ratio

$$R\delta c = c(Rmr1) - c(Rmr2);\ Rmr1 < Rmr2$$

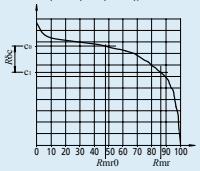

Relative material ratio of the primary profile Pmr
Relative material ratio of the roughness profile Rmr
Relative material ratio of the waviness profile Wmr

Material ratio determined at a profile section level $R\delta c$ related to the reference section level c_0

$$Pmr, Rmr, Wmr = Pmr(c_1), Rmr(c_1), Wmr(c_1)$$

where $c_1 = c_0 - R\delta c\ (P\delta c, W\delta c)$
$c_0 = c\ (Pm0, Rmr0, Wmr0)$

Probability density function
(profile height amplitude distribution curve)

Sample probability density function of the ordinate Z(x) within the evaluation length

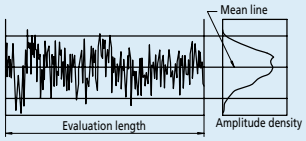

JIS Specific Parameters

Ten-point height of irregularities, Rz_{JIS}

Sum of the absolute mean height of the five highest profile peaks and the absolute mean depth of the five deepest profile valleys, measured from the mean line within the sampling length of a roughness profile. This profile is obtained from the primary profile using a phase-correct band-pass filter with cutoff values of lc and ls.

$$Rz_{JIS} = \frac{|Zp_1+Zp_2+Zp_3+Zp_4+Zp_5| + |Zv_1+Zv_2+Zv_3+Zv_4+Zv_5|}{5}$$

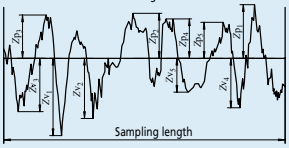

Symbol	Used profile
Rz_{JIS82}	Surface profile as measured
Rz_{JIS94}	Roughness profile derived from the primary profile using a phase-correct high-pass filter

Arithmetic mean deviation of the profile Ra_{75}

Arithmetic mean of the absolute values of the profile deviations from the mean line within the sampling length of the roughness profile (75%). This profile is obtained from a measurement profile using an analog high-pass filter with an attenuation factor of 12db/octave and a cutoff value of λc.

$$Ra_{75} = \frac{1}{ln}\int_0^{ln} |Z(x)|dx$$

J

Mitutoyo

Roundtest

Roundtest RA-120/120P
SERIES 211 — Roundness Measuring Instruments

RA-120

RA-120P

The analysis capabilities for the various models (**RA-120/120P/10**) vary. For details, refer to page L-26.

MeasurLink® ENABLED
Data Management Software by Mitutoyo

Easy Operation and Compact Design

- Outstanding cost/performance ratio.
- Designed for shop-floor use, on the production line.
- D.A.T. (Digimatic Adjustment Table) function aids adjustments such as centering and leveling, and substantially reduces the time required for preliminary setup operations.

What is the D.A.T. Function? <Patented>

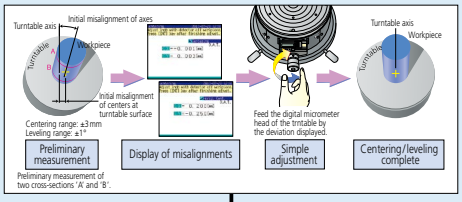

Dedicated analysis unit type (RA-120)

- Compact, lightweight design due to incorporating electronic components inside the main unit.

Data analysis by PC (RA-120P)

- **ROUNDPAK**, a data analysis program employs Windows OS and archives higher level of analysis.

Refer to the Roundtest **RA-120/120P** Brochure (**E15008-US**) for more details.

SPECIFICATIONS

Model No.			RA-120		RA-120P	
Order No.		inch/mm	**211-544-13**	**211-543-13**	**211-547-11**	**211-546-13**
		DAT Function	-	Installed	-	Installed
Turntable	Rotational accuracy (JIS B 7451-1997)	Radial direction	(0.04 + 6H/10000) µm H: Probing height (mm)			
		Axial direction	(0.04 + 6X/10000) µm X: distance from the center of rotation (mm)			
	Maximum probing diameter*1		ø280 mm (ø380 mm: for the vertical position when detector holder is installed reversely, the maximum probing height is up to 50 mm from the table top.)			
	Maximum loading mass		25 kg			
Vertical movement	Vertical travel		280 mm			
X-axis	Travel range		165 mm (-25 mm to 140 mm from the rotation center)			
Detector*2	Measuring range		±1000 µm			

*1 Auxiliary stage for a low-height workpiece (optional) is required for the measurement 20 mm or less in the radial direction from the center point of the table and 20 mm or less from the table top.
*2 Only the standard length stylus is applicable to this detector. The long type cannot be used.

Get a Quote

MeasurLink® ENABLED
Data Management Software by Mitutoyo

PROPRIETARY INSPECTION CERTIFICATE

Roundtest RA-1600M
SERIES 211 — Roundness/Cylindricity Measuring System

RA-1600M

Detector safety mechanism

- Compact body and a wide measuring range assures precision that compares well with that of higher-grade models.
- D.A.T. (Digital Adjustment Table) function aids manual workpiece centering and leveling.
- Safety mechanism provided in the detection section as a standard feature.
- A sliding mechanism (optional sliding detector holder) can be installed in the detector holder. It enables one-touch measurement of a workpiece with a deep hole having a thick wall, which has been difficult with the standard detector.

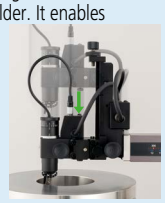

SPECIFICATIONS

Model No.			RA-1600M
Order No.		inch/mm	**211-724-11**
Turntable	Rotational accuracy (JIS B 7451-1997)	Radial direction	(0.03 + 6H / 10000) µm H: Probing height (mm)
		Axial direction	(0.03 + 6X / 10000) µm X: Distance from the center of rotation (mm)
	Maximum loading mass		25 kg
	Maximum probing diameter		ø280 mm
Vertical movement (Z-axis column unit)	Vertical travel		300 mm
X-axis	Travel range		165 mm (-25 mm to +140 mm from the rotation center)
Detector	Measuring range	Standard	±400 µm/±40 µm/±4 µm
		Tracking	±5 mm

Refer to the Roundtest **RA-1600M** Brochure (**E15000-US**) for more details.

Roundtest RA-2200
SERIES 211 — Roundness/Cylindricity Measuring System

RA-2200AH
System vibration isolator (with side table)

RA-2200AH
System vibration isolator (monitor arm type)*
* Printer table (provided by the customer) not shown.

Achieve the World's Highest Level of Accuracy

- High-speed automatic centering/leveling function contributes to a significant reduction in the man-hours required for setups.
- A fully automatic system which performs processing automatically from part program calling, centering/leveling, measurement, calculation, all the way through to printing.
- Capable of continuous inside/outside diameter measurement without changing the detector orientation (up to 50 mm ID).
- The automatic positioning function of the turntable enables automatic measurement in combination with table rotation and slider/column movement.
- Advanced graphical analysis such as power spectrum chart is available.
- A sliding mechanism is incorporated in the detector holder part.

SPECIFICATIONS

Model No.			RA-2200AS	RA-2200DS	RA-2200AH	RA-2200DH
Order No.		inch/mm	**211-511-11**	**211-514-13**	**211-512-11**	**211-516-13**
Turntable	Rotational accuracy (JIS B 7451-1997)	Radial direction	(0.02 + 3.5H/10000) µm H: Probing height (mm)			
		Axial direction	(0.02 + 3.5X/10000) µm X: Distance from the center of rotation(mm)			
	Maximum loading mass		30 kg			
	Maximum probing diameter		ø300 mm			
Vertical movement (Z-axis column unit)	Vertical travel		300 mm		500 mm	
X-axis	Travel range		175 mm (-25 mm to +150 mm from the rotation center)			
Detector	Measuring range	Standard	±400 µm/±40 µm/±4 µm			
		Tracking	±5 mm			

Refer to the Roundtest **RA-2200** Series Brochure (**E15001-US**) for more details.

Roundtest

MeasurLink® ENABLED
Data Management Software by Mitutoyo

Roundtest RA-H5200
SERIES 211 — Roundness/Cylindricity Measuring System

RA-H5200AS
with side table
(option 178-181)

Leveling Function Achieves the World's Highest Level of Accuracy

- High-speed automatic centering/leveling function contributes to a significant reduction in the man-hours required for setups.

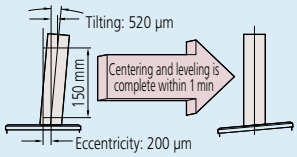

- A fully automatic system which performs processing automatically from part program calling, centering/leveling, measurement, calculation, all the way through to printing.
- Capable of continuous inside/outside diameter measurement without changing the detector orientation (up to 50 mm ID).
- The automatic positioning function of the turntable enables automatic measurement in combination with table rotation and slider/column movement.
- Advanced graphical analysis such as a power spectrum chart is available.
- A sliding mechanism is incorporated in the detector holder.

SPECIFICATIONS

Model No.			RA-H5200AS	RA-H5200AH
Order No.		inch/mm	**211-531-11**	**211-532-11**
Turntable	Rotational accuracy (JIS B 7451-1997)	Radial direction	(0.02 + 3.5H/10000) µm H: Probing height (mm)	
		Axial direction	(0.02 + 3.5X/10000) µm X: Distance from the center of rotation (mm)	
	Maximum loading mass		80 kg (On auto-centering: 65 kg)	
	Maximum probing diameter		ø400 mm	
Vertical movement (Z-axis column unit)	Vertical travel		350 mm	550 mm
X-axis	Travel range		225 mm (-25 mm to +200 mm from the rotation center)	
Detector	Measuring range	Standard	±400 µm/±40 µm/±4 µm	
		Tracking	±5 mm	

Roundtest RA-2200 PLUS
SERIES 211 — Roundness/Cylindricity Measuring System

RA-2200AH PLUS
System vibration isolator (with side table)

- The turntable with automatic centering and leveling function is equipped as standard, which frees operators from manual centering and leveling operations.
- Automatic control of holder arm posture (vertical/horizontal) and the rotation feature of the detector (rotates in 1° increments in the range of 0 to 270°) enables continuous measurement of various feature combinations, such as OD/ID and/or top/bottom plane measurements.
- A Mitutoyo linear scale is used in the X-axis drive unit to directly detect the position of the drive unit. It guarantees the highly precise positioning vital for automatic measurement.
- A roughness detector (optional) is supported.

SPECIFICATIONS

Model No.			RA-2200AS PLUS	RA-2200AH PLUS
Order No.		inch/mm	**211-517-11**	**211-518-11**
Turntable	Rotational accuracy (JIS B 7451-1997)	Radial direction	(0.02 + 3.5H/10000) µm H: Probing height (mm)	
		Axial direction	(0.02 + 3.5X/10000) µm X: Distance from the center of rotation (mm)	
	Maximum loading mass		30 kg	
	Maximum probing diameter		ø256 mm	
Vertical movement (Z-axis column unit)	Vertical travel		300 mm	500 mm
X-axis	Travel range		175 mm (-25 mm to +150 mm from the rotation center)	
Detector	Measuring range	Standard	±400 µm/±40 µm/±4 µm	
		Tracking	±5 mm	

Refer to the Roundtest **RA-2200** Series Brochure (**E15001-US**) for more details.

J

MeasurLink® ENABLED
Data Management Software by Mitutoyo

PROPRIETARY INSPECTION CERTIFICATE

Accuracy to Improve Productivity and Efficiency

- The turntable with automatic centering and leveling function is equipped as standard, which frees operators from manual centering and leveling operations.
- Automatic control of holder arm posture (vertical/horizontal) and the rotation feature of the detector (rotates in 1° increments in the range of 0 to 270°) enables continuous measurement of various feature combinations, such as OD/ID and/or top/ bottom plane measurements.
- A Mitutoyo linear scale is used in the X-axis drive unit to directly detect the position of the drive unit. It guarantees the highly precise positioning vital for automatic measurement.
- A roughness detector (optional) is supported.

Roundtest RA-H5200 PLUS SERIES 211 — Roundness/Cylindricity Measuring System

RA-H5200AS PLUS
with side table
(option 178-181)

SPECIFICATIONS

Model No.			RA-H5200AS PLUS	RA-H5200AH PLUS
Order No.		inch/mm	**211-533-11**	**211-534-11**
Turntable	Rotational accuracy (JIS B 7451-1997)	Radial direction	(0.02 + 3.5H/10000) µm H: Probing height (mm)	
		Axial direction	(0.02 + 3.5X/10000) µm X: Distance from the center of rotation (mm)	
	Maximum loading mass		80 kg (On auto-centering: 65 kg)	
	Maximum probing diameter		ø356 mm	
Vertical movement (Z-axis column unit)	Vertical travel		350 mm	550 mm
X-axis	Travel range		225 mm (-25 mm to +200 mm from the rotation center)	
Detector	Measuring range	Standard	±400 µm/±40 µm/±4 µm	
		Tracking	±5 mm	

Need Support?

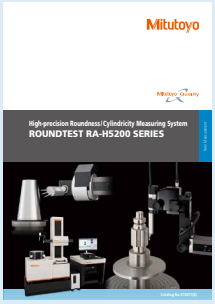

Refer to the Roundtest **RA-H5200** Series Brochure (**E15011-US**) for more details.

J

Roundtracer

ROUNDTRACER Extreme SERIES 211 — CNC Roundness/ Cylindricity Measuring System

RTX-0605-A
(Optional side table 12AAV541)

SPECIFICATIONS

Model No.			RTX-0605-A
Order No.		inch/mm	**211-552-11**
Turntable	Rotational accuracy (JIS B 7451:1997)	Radial direction	(0.02 + 3.5H/10000) µm H: Probing height (mm)
		Axial direction	(0.02 + 3.5R/10000) µm R: Measuring radius (mm)
	Maximum loading mass		60 kg
	Maximum probing diameter		ø680 mm
Vertical movement (Z-axis column unit)	Travel range		550 mm
X-axis	Travel range		197 mm (-33 mm to 164 mm from the rotation center)*
Detectors	Measuring range		±400 µm/±40 µm/±3.6 µm

* Value when the measuring system is mounted with a roundness detector and a standard stylus, and is in the outside diameter measuring position with the stylus at 0°.

ROUNDTRACER Flash Series 211 - Roundness / Cylindricity Measuring System

211-581-02MEU

The Roundtracer Flash is a fast, flexible and precise optical shaft measuring system. The instrument is a good solution for accurate quality control in a laboratory as well as in the production environment.

- Dimensional, position, form analysis in static and dynamic mode.
- Image sensors integrated in a fixed position across the product structure to cover the entire measurement range.
- Less mechanical stress.
- Side-by-side 2D image architecture.
- Short cycle time.
- One-click measuring cycle activation.
- Graphical user interface via touchscreen monitor.
- Thread and camshaft measurement functionality.

SPECIFICATIONS

Model No.		S100	S300
Order No.		**211-581-01MEU**	**211-583-01MEU**
Z-axis (column) vertical travel		100mm	300mm
Measuring Range		ø60 mm	
Max. turntable loading		6 kg	
Measuring uncertainty	Length	U95 (2+L[mm]/200) µm	
	Diameter	U95 (1+LDmm]/200) µm	
Workpiece loading mode		Manual and automatic (by robot)	
Workpiece rotation		Standard	
Measuring mode		Static and dynamic	
Dimensions (WxDxH)		925x615x640mm	925x615x840mm

MeasurLink® ENABLED
Data Management Software by Mitutoyo

PROPRIETARY INSPECTION CERTIFICATE

ROUNDTRACER EXTREME Capabilities

- ROUNDTRACER EXTREME models are triple-role CNC profile measuring systems that integrate the roundness and cylindricity measuring capabilities of our ROUNDTEST models and the contour and surface roughness measuring capabilities of our hybrid, dual-role FORMTRACER models to measure surface roughness, contour, roundness, and cylindricity.

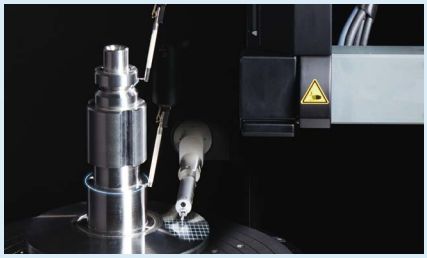

- A detector holder with motorized sliding function enables continuous inside and upper surface measurement of thick workpieces.

Refer to the ROUNDTRACER EXTREME Brochure (**E15032**) for more details.

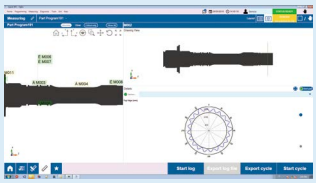

Smart search function provides part detail review by images and trend visualization.

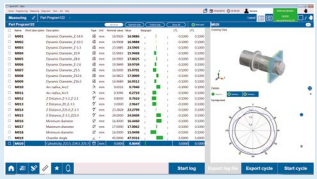

Superior setup flexibility

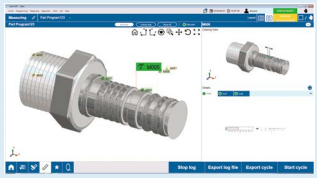

Intuitive user interface

J

ROUNDPAK
Roundness/Cylindricity measurement/Analysis software

- A wide variety of parameters including those for roundness/cylindricity, as well as flatness and parallelism, are provided as standard features. You can visually select these parameters using icons.

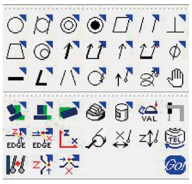

ROUNDPAK also comes with specialized functions, such as the design value best-fit analysis function, the harmonic analysis function, and a function for recording the peak or trough points on a circumference. Data that has already been collected can be easily used for re-calculation or deleted.

Data deletion

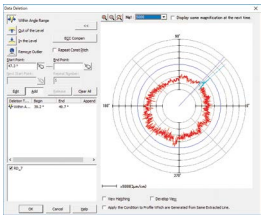

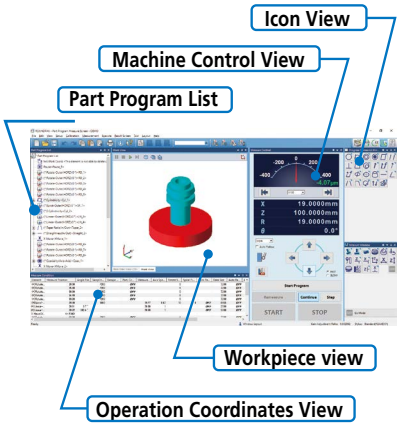

- Analysis results such as cylindricity and coaxiality can be visually expressed in 3D graphics.

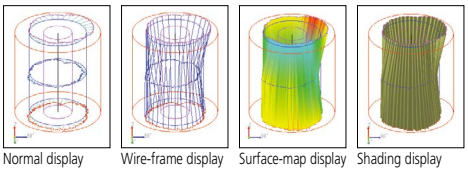

Normal display | Wire-frame display | Surface-map display | Shading display

- The customer can create reports in custom formats by specifying how the analysis results will be displayed as well as the sizes and positions of graphics. The analysis result window can be directly utilized as a layout window. Since the measurement procedure, including the layout information, is saved, the entire process, from measurement start, calculation, result saving, and finally to printing, can be automatically executed.

- An offline teaching function is provided to create a part program (measurement procedure) without an actual measurement target, enabling the user to virtually execute the measurement operation in a 3D simulation window.

Analysis type		Model	RTX-0605-A	RA-2200/H5200 RA-2200 PLUS/H5200 PLUS	RA-1600	RA-120P	RA-120	RA-10
Roundness			✓	✓	✓	✓	✓	✓
Cylindricity			✓	✓	✓			
Concentricity			✓	✓	✓	✓	✓	✓
Coaxiality	Axis element		✓	✓	✓	✓	✓	✓
	Axis		✓	✓	✓	✓		
Flatness			✓	✓	✓	✓	✓	✓
Parallelism			✓	✓	✓	✓	✓	
Perpendicularity			✓	✓	✓	✓	✓	
Radial deviation			✓	✓	✓			
Thickness deviation			✓	✓	✓	✓	✓	
Radial runout			✓	✓	✓	✓	✓	✓
Total runout			✓	✓	✓			
Diameter measurement			✓	✓	✓			
Straightness			✓	✓	✓			
Inclination			✓	✓	✓			
Taper			✓	✓	✓			
Diameter contour tolerancing			✓	✓	✓			
Rectilinear contour tolerancing			✓	✓	✓			
Width measurement (only CNC)			✓	✓ (only PLUS and CNC)				
Power spectrum			✓	✓	✓			
Harmonic analysis			✓	✓	✓	✓		
Profile operation			✓	✓	✓	✓		
Tapered surface analysis			✓	✓	✓			
Lead (twist) analysis			✓ (optional)					
3D surface property analysis			✓ (optional)					

Find Training

Featured Products

Micro Vickers Hardness Testing Machines

HM 200 series Type A

Refer to page K-4 for details.

Micro Vickers Hardness Testing Machines

HM-200 Series Type B and Type D

Refer to page K-5 for details.

Vickers Hardness Testing Machines

HV-100 Series

Refer to page K-6 for details.

Rockwell Hardness Testing Machines

HR-300/HR-400

Refer to page K-9 for details.

Rockwell Hardness Testing Machines

HR-530/530L

Refer to page K-10 for details.

Rockwell Hardness Testing Machines

HR-600

Refer to page K-13 for details.

Portable Hardness Testing Instruments

Hardmatic HH-V400

Refer to page K-14 for details.

INDEX

Micro Hardness Testing Machines

Lineup of Hardness Testing Machines	K-3
HM-210/220 Micro Vickers Hardness	K-4,5
HV-110/120 Standard Vickers Hardness	K-6,7
Optional Accessories Micro-Vickers/Vickers Hardness Testing Machine	K-8

Rockwell Hardness Testing Machines

HR-300/HR-400 Rockwell Tester	K-9
HR-530/530L Rockwell Tester	K-10
Optional Accessories for Rockwell Testers	K-11,12
HR-600 Rockwell Tester	K-13

Portable Hardness Testing Machines

Hardmatic HH-V400	K-14
Hardmatic HH-300	K-15
Hardmatic HH-300 Test Block Set	K-16
Quick Guide to Precision Measuring Instruments - Hardness Testing Machines	K-17,18

Lineup of Hardness Testing Machines

Hardness testing machines provide the simplest and most economical testing methods among many material testing machines, playing an important role in research activities, production activities, and commercial transactions.

Mitutoyo offers a choice of standard hardness testing machines that are optimal for hard materials such as metals to soft materials such as plastic and rubber, as well as custom-designed testers such as in line-type automatic machines and labor-saving machines required on the shop floor.

Microhardness (Micro-Vickers)

Automatic Vickers Hardness Testing

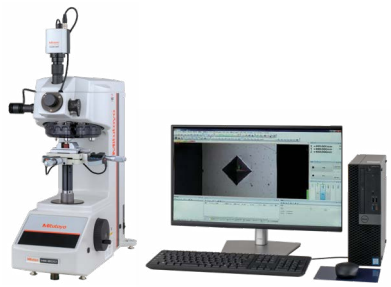

Rebound Type Portable (Portable)

Rockwell

Rockwell Superficial

Vickers

For Rubber and Plastic

Find a Distributor

HM-210 / 220 Type A

SERIES 810 — Micro Vickers Hardness Testing Machines

- The electromagnetic force motor used in the loading mechanism enables the test force to be freely selected (see test force specifications) over the wide range of 0.4903mN to 19610mN (0.05gf to 2 kgf). It is also possible to freely set load dwell times. Now your desire for absolute control over the indentation size in Vickers hardness testing can be satisfied. The HM-200 series always offers the test force most appropriate for the specimen material and shape.
- Newly-designed 'MH Plan' objectives are optimized for measuring indentation images. The lineup includes 6 types of long working distance objectives: 10X, 20X, 50X and 100X for measuring indentation images, and 2X and 5X for enabling wide-range measurement around indentations.
- The long working distance objectives enable a comfortable working distance between the objective and the specimen surface. This greatly reduces the possibility of collision between the specimen and the objective during focusing operations. (e.g. for 50X objectives: 1.1mm for conventional models, 2.5mm for HM-200 series).
- LEDs, which have a longer life, produce less heat, consume less power and are more energy efficient than incandescent bulbs, are employed for the illumination system.
- The motorized turret allows for up to 4 objective lenses and 2 indenter assemblies to be mounted at the same time.

Observation image of the indentation (50X)

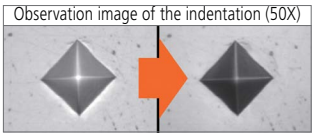

Stray light reduction around the indentation

HM-210A

Technical Data

Test force range:
HM-210A: 9 steps + arbitrary test force
HM-220A: 19 steps + arbitrary test force
Load dwell time: 0 - 999s
Manual XY stage unit
Stage size: 100x100mm
Travel range: 25x25mm
with Digimatic in/mm micrometer heads
Resolution: 0.001mm
Max. specimen height: 133mm (Stage size: 25 x 25mm)
Max. specimen height: 121mm (Stage size: 50 x 50mm)
Max. specimen depth: 160mm (from the center of indenter)
Optical path: 4-port objectives switching system of Infinity-correction optical system
Resolution: 0.01µm (When using objectives of X40 or more)
Data output: Serial interface (RS-232), Digimatic interface, USB 2.0
Power supply: 39VA 100-125/220-240V AC, 50/60Hz
Dimensions: (W x D x H): 315x671x595mm
Mass: 43kg

Optional Accessories (Factory-installed option)

11AAE665	Objective lens unit 2X
11AAE666	Objective lens unit 5X
11AAE667	Objective lens unit 10X
11AAE668	Objective lens unit 20X
11AAE669	Objective lens unit 100X
11AAE677	Measuring microscope (Digital ocular)
11AAE670	Knoop Indenter Assembly (HM-210 Series)
11AAE671	Knoop Indenter Assembly (HM-220 Series)

Optional Accessories

810-454-20A	TV camera unit (8.4 inch LCD)
19BAA058	Diamond indenter for Vickers (HM210 Series standard test force)
19BAA059	Diamond indenter for Vickers (HM220 Series low test force)
19BAA061	Diamond indenter for Knoop (HM210 Series)
19BAA062	Diamond indenter for Knoop (HM220 Series)
810-013	Specimen (thin plate) holder
810-014-1	Specimen (wire) holder
810-015-1	Specimen (wire or ball) holder
810-016	50 mm Vise
810-017	100 mm Vise
810-018	Rotary table
810-019	Specimen tilting holder
810-020	Universal specimen holder
810-085	Adjustable specimen (thin plate) holder
810-095	Rotatable specimen stage
375-056	Stage Micrometer (glass) Micro-scale
810-650-1	Resin mold specimen stage ø25.4
810-650-2	Resin mold specimen stage ø30
810-650-3	Resin mold specimen stage ø31.75
810-650-4	Resin mold specimen stage ø38.1
810-650-5	Resin mold specimen stage ø40
810-641	Vibration Isolator
810-424	1"x1" in/mm stage (standard)
810-427	2"x2" in/mm stage

Power turret with up to 2 indenter mounts and 4 objective mounts (manual operation possible)

Touch-screen type control panel

SPECIFICATIONS

TYPE A Digital Hardness Tester

Model No.	HM-210 Type A	HM-210 Type A V/K	HM-220 Type A	HM-220 Type A V/K
Order No.	**64AAB305PA**	**64AAB306PA**	**64AAB307PA**	**64AAB308PA**
Fixed test force (mN)	98.07, 196.1, 294.2, 490.3, 980.7, 1961, 2942, 4903, 9807 (10gf-1000gf)		0.4903, 0.9807, 1.961, 2.942, 4.903, 9.807, 19.61, 29.42, 49.03, 98.07, 196.1, 294.2, 490.3, 980.7, 1961, 2942, 4903, 9807, 19610 (0.05 gf-2kgf)	
Arbitrary test force	≤100 gf in 1 gram increments, > 100gf in 10 gram increments		< 1 gf in .1 gf increments, ≤100 gf in 1 gram increments, > 100gf in 10 gram increments	
Test force control	Force generation by electromagnetic and automatic control (load, dwell, unload)			
Control unit	Color LCD Touch Screen			
Loading rate	60 µ/ sec		60µm/s, Variable between 2 and 60µm/s. ≤ 30 gf.	
Load dwell time	0-999 sec			
Indenter	Vickers	Vickers and Knoop	Vickers	Vickers and Knoop
Objective lenses	10x, 50x	10x, 20x, 50x	10x, 50x, 100x	10x, 50x, 100x
Objective turret	Motor driven and manual operation			
Filar eye piece	Dual Line, 10X, .01µ min			

With TV camera unit 810-454-20A (selectable with HM-210A/220A)

Measurement of indentation dimensions on a TV monitor reduces eye fatigue, which leads to improvement in operation efficiency in multi-point testing.

K

Mitutoyo

HM-200 Series with AVPAK Software

For Semi and Fully Automatic Type B and D Systems

System B (HM-210B/220B)

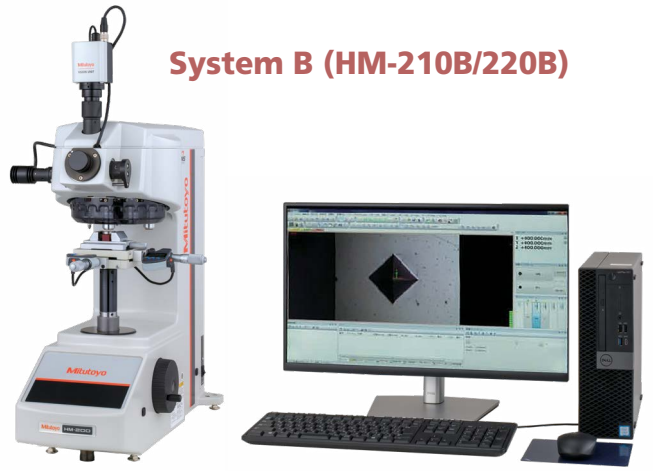

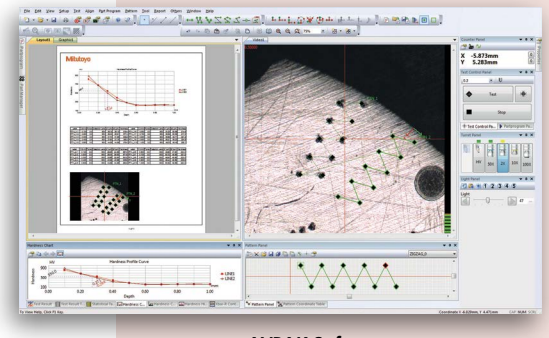

AVPAK Software

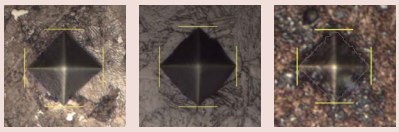

Indentation-reading example

System B is equipped with **AVPAK-10**, a software package that automatically measures the diagonal length of an indentation and calculates the corresponding hardness value. This means that measurement error caused by variation in operator interpretation is eliminated, thereby reducing costs.

Automatic measurement of indentation/ manual stage.

System D (HM-210D/220D)

In addition to the functions of System B, System D is equipped with the autofocus function and motorized x-y stage. This function allows for automatic hardness testing, thereby increasing efficiency and reducing labor costs.

Automatic measurement of indentation / motorized XY stage / Autofocusing

System D Technical Data

Motorized X-Y Stage	Travel Max	50 x 50 mm*
	Travel Min	1μ
	Table Size	130 x 130mm
	Speed Max	25mm/ sec
Motorized Focusing Stage	Max Range	1.4mm
	Min Unit	.1μ
	Max Speed	1mm/ sec
Joystick Controller Functions	Functions	X and Y Lock out
	Axis	X, Y and Z (Focus)
	Speed Control	Adjustable H,M,L
	Tester Control	Indent, Turret Position
	Other	Emergency Stop

*Optional 100 x 100 mm

SPECIFICATIONS

TYPE B PC-Driven Test System TYPE D PC-Driven Test System with motorized stage and auto focus

Model No.	HM-210 Type B	HM-210 Type B V/K	HM-220 Type B	HM-220 Type B V/K
Order No.	**64AAB323PA**	**64AAB324PA**	**64AAB325PA**	**64AAB326PA**
Model No.	HM-210 Type D	HM-210 Type D V/K	HM-220 Type D	HM-220 Type D V/K
Order No.	**64AAB380PA**	**64AAB381PA**	**64AAB382PA**	**64AAB383PA**
Fixed test force (mN)	98.07, 196.1, 294.2, 490.3, 980.7, 1961, 2942, 4903, 9807 (10gf-1000gf)		0.4903, 0.9807, 1.961, 2.942, 4.903, 9.807, 19.61, 29.42, 49.03, 98.07, 196.1, 294.2, 490.3, 980.7, 1961, 2942, 4903, 9807, 19610 (0.05 gf-2kgf)	
Arbitrary test force	≤100 gf in 1 gram increments, > 100gf in 10 gram increments		< 1 gf in .1 gf increments, ≤100 gf in 1 gram increments, > 100gf in 10 gram increments	
Test force control	Force generation by electromagnetic and automatic control (load, dwell, unload)			
Control unit	None, By PC*			
Loading rate	60 μ/ sec		60μm/s, Variable between 2 and 60μm/s. ≤ 30 gf.	
Load dwell time	0-999 sec			
Indenter	Vickers	Vickers and Knoop	Vickers	Vickers and Knoop
Objective lenses	10x, 50x	10x, 20x, 50x	10x, 50x, 100x	10x, 50x, 100x
Objective turret	Motor-driven and manual operation			
Filar eye piece	None			
CCTV camera	3 megapixel, 1/2"		3 megapixel, 1/2"	
Software	AV Pak		AV Pak	

*Must use specified PC

HV110 / HV120

Series 810—Vickers Hardness Testing Machines – Type A

- Heavy load Vickers testing machines feature motorized force selection from 1-50kgf or .3 to 30kgf. Fully adjustable long-life LED illumination runs cool.
- A dual-line filar eyepiece combines with a color touch-screen LCD to create accurate measurements with the touch of a button.
- The motorized turret can accommodate up to 3 long working distance objective lenses for an even wider range of materials and a wide variety of anvils and x-y stages are also available.

Optional Accessories

Lens:

11AAC712	OBJECTIVE LENS 2X
11AAC713	OBJECTIVE LENS 5X
11AAE674	OBJECTIVE LENS 20X
11AAE675	OBJECTIVE LENS 50X
11AAE676	OBJECTIVE LENS 100X

Stage

810-423	MANUAL STAGE 50X50
810-427	MANUAL STAGE 2"X 2"(In/mm)

Optical

810-454-20	CCTV System

Indenters

19BAA060	DIAMOND INDENTER (VICKERS TYPE)
19BAA063	KNOOP DIAMOND INDENTER

Data Management

936937	SPC cable (1m / 40")
06AFM380D	USB Input Tool Direct for data entry into Excel

HV120 show with optional **810-454-20** CCTV Camera

SPECIFICATIONS

Model	HV110	HV120
Order No.	**810-441A**	**810-446A**
Test force	9.807N (1kgf),19.61N (2kgf),29.42N (3kgf), 49.03N (5kgf), 98.07N (10kgf), 196.1N (20kgf)294.2N (30kgf), 490.3N (50kgf)	2.942N (0.3kgf),4.903N (0.5kgf), 9.807N (1kgf),24.51N (2.5kgf),49.03N (5kgf), 98.07N (10kgf), 196.1N (20kgf)294.2N (30kgf)
Supported test method	HV, HK, HB (Light Force*), Kc	
Test force selection	Motorized	
Loading accuracy	±1%	
Load control	60µ/s, 150µ/s Automatic (loading, duration, unloading)	
Load rate	5~999 sec.	
Objective lens	2X, 5X, 10X (standard), 20X, 50X, 100X	
Measuring microscope	10X Dual-line filar	
Total magnification	20-1000X (100X Standard)[1]	
Field of view	1,400µ (10X Lens) Type A	
Minimum reading	< 50x = 0.1µm, ≥50x = 0.01µm	
Display	Color LCD touch-screen	
Scaled conversion:	8 Types (ASTM, ISO, JIS, SAE and BS)	
Statistics:	N, Max., Min., Average, Range, High, Low, Good, Over, Under, SD(n-1), SD(n-1), SD(n) Go/No-go judgment,	
Curvature correction:	0.01 to 200.00mm	
Maximum sample height	210mm Type A	
Maximum sample depth	160mm	
Maximum sample weight	20 Kg Anvil, 10 Kg with x-y Stage	
Optical path	100% Eyetube or Camera	
Output	Rs232, SPC, USB2.0	
Power supply	120 Volt AC/ 60 Hz	
Dimensions main unit (WxDxH)	9.9"x 24.7"x30.7 " (252x627x781mm)	
Mass	110lbs. (50kg)	

* Optional test forces may be required.
1: 10x eyepiece included.
Contact Mitutoyo for more information.

Got Questions?

K

HV110 / HV120

Series 810—Vickers Hardness Testing Machines – Type B / D

- The Type B HV110/ HV120 Vickers hardness testers add computer control to make measurements even more repeatable.
- A high-resolution 3 mega-pixel camera produces crisp images that are automatically measured in less than .3 seconds.
- Various software functions such as automatic light intensity, simple-to-use report generator and programming wizards make tedious and repetitive testing requirements more accurate than manual testing and eliminates common operator errors.

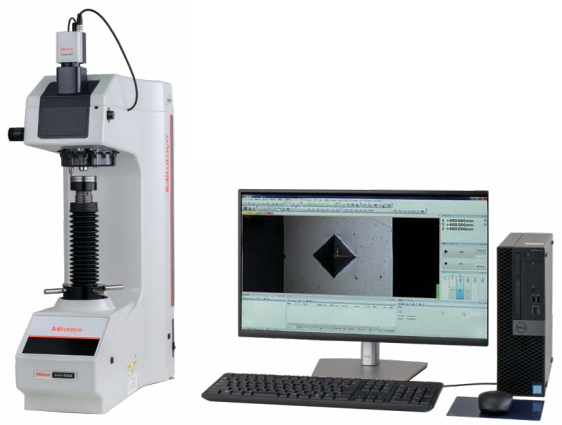

Type B System
show with optional PC

Type D HV110/120 adds a motorized X-Y stage with up to 100mm x 100mm of travel for large samples. A motorized focusing platform is also utilized for a complete walk away system

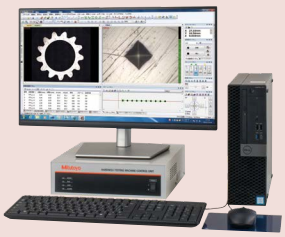

Type D System
show with optional PC

SPECIFICATIONS

Model	HV110 Main Unit Only	HV120 Main Unit Only
Order No.	**810-443A**	**810-448A**
Test force	9.807N (1kgf),19.61N (2kgf),29.42N (3kgf), 49.03N (5kgf), 98.07N (10kgf), 196.1N (20kgf)294.2N (30kgf), 490.3N (50kgf)	2.942N (0.3kgf),4.903N (0.5kgf), 9.807N (1kgf),24.51N (2.5kgf),49.03N (5kgf), 98.07N (10kgf), 196.1N (20kgf)294.2N (30kgf)
Supported test method	HV, HK, HB (Light Force**), Kc	
Measuring microscope	Optional	
Field of View w/ 10X Lens	590 x 443 µm	
Display	Via PC	
Curvature correction:	0.01 to 200.00mm	
Maximum sample height	172mm Type B, 132mm Type D	
Maximum sample depth	160mm	
Maximum sample weight	10 Kg Type B, 3 kg Type D	
Optical path	100% Eyetube or Camera	
Output	USB2.0	
Mass	110lbs. (50kg)	

*Other specifications as Type A testers
** Optional test forces may be required

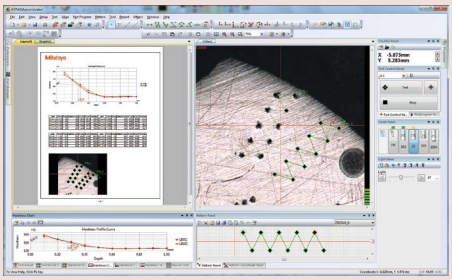

Basic Configuration	Type B	Type D
Main Unit	810-443A or 810-448A	810-443A or 810-448A
AVPak-10 Software	11AAE268-USE	11AAE268-USE
PC***	***	***
Automatic Focus Stage		810-465
Motorized X-Y Stage 50x50		810-461-10
Motorized X-Y Stage 100x100		810-462-10

*** PC not included

Talk to Sales

Optional Accessories

Micro-Vickers/Vickers Hardness Testing Machine

50x50mm Travel Stage

Manual XY Stage Unit 50 x 50
Manual XY Stage Unit 2"x 2"
810-423 Metric
810-427 Inch/Metric

Clamping Devices (Vises)

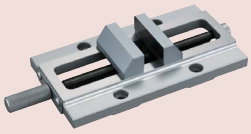

Vise
Max. opening: 3.94"(100mm)
810-017

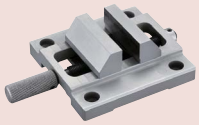

Vise
Max. opening: 2"(51mm)
810-016

Rotary Table

Rotary Table
810-018

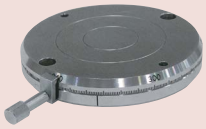

Round Tables

Dimensions: 7.08"(180mm)
810-037

Specimen (Thin Plate) Holder

Secures a plate with a thickness of .197"(5mm) or less, or foil-like specimens.
810-013

Specimen (wire) Holder

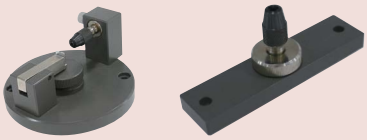

Used to horizontally or vertically secure a wire or needle specimen that has a diameter of .126"(3.2mm) or less.
810-014-1 horizontal
810-015-1 vertical

Test Blocks

Order No.	Description	Load
64HAA375	Vickers 100HV Test Block	100gf
64HAA376	Vickers 200HV Test Block	100gf
64HAA377	Vickers 300HV Test Block	100gf
64HAA378	Vickers 400HV Test Block	100gf
64HAA379	Vickers 500HV Test Block	100gf
64HAA380	Vickers 600HV Test Block	100gf
64HAA381	Vickers 700HV Test Block	100gf
64HAA382	Vickers 800HV Test Block	100gf
64HAA383	Vickers 900HV Test Block	100gf
64HAA384	Vickers 100HV Test Block	300gf
64HAA388	Vickers 500HV Test Block	300gf
64HAA385	Vickers 200HV Test Block	300gf
64HAA386	Vickers 300HV Test Block	300gf
64HAA387	Vickers 400HV Test Block	300gf
64HAA389	Vickers 600HV Test Block	300gf
64HAA390	Vickers 700HV Test Block	300gf
64HAA391	Vickers 800HV Test Block	300gf
64HAA392	Vickers 900HV Test Block	300gf
64HAA393	Vickers 100HV Test Block	500gf
64HAA394	Vickers 200HV Test Block	500gf
64HAA395	Vickers 300HV Test Block	500gf
64HAA396	Vickers 400HV Test Block	500gf
64HAA397	Vickers 500HV Test Block	500gf
64HAA398	Vickers 600HV Test Block	500gf
64HAA399	Vickers 700HV Test Block	500gf
64HAA400	Vickers 800HV Test Block	500gf
64HAA401	Vickers 900HV Test Block	500gf
64HAA402	Vickers 100HV Test Block	1,000gf
64HAA403	Vickers 200HV Test Block	1,000gf
64HAA404	Vickers 300HV Test Block	1,000gf
64HAA405	Vickers 400HV Test Block	1,000gf
64HAA406	Vickers 500HV Test Block	1,000gf
64HAA407	Vickers 600HV Test Block	1,000gf
64HAA409	Vickers 800HV Test Block	1,000gf
64HAA408	Vickers 700HV Test Block	1,000gf
64HAA410	Vickers 900HV Test Block	1,000gf
64HAA411	Knoop 100HK Test Block	100gf
64HAA412	Knoop 200HK Test Block	100gf
64HAA413	Knoop 300HK Test Block	100gf
64HAA414	Knoop 400HK Test Block	100gf
64HAA415	Knoop 500HK Test Block	100gf
64HAA416	Knoop 600HK Test Block	100gf
64HAA417	Knoop 700HK Test Block	100gf
64HAA418	Knoop 800HK Test Block	100gf
64HAA419	Knoop 100HK Test Block	500gf
64HAA420	Knoop 200HK Test Block	500gf
64HAA421	Knoop 300HK Test Block	500gf
64HAA422	Knoop 400HK Test Block	500gf
64HAA423	Knoop 500HK Test Block	500gf
64HAA424	Knoop 600HK Test Block	500gf
64HAA425	Knoop 700HK Test Block	500gf
64HAA426	Knoop 800HK Test Block	500gf
64HAA427	Knoop 100HK Test Block	1,000gf
64HAA428	Knoop 200HK Test Block	1,000gf
64HAA429	Knoop 300HK Test Block	1,000gf
64HAA430	Knoop 400HK Test Block	1,000gf
64HAA431	Knoop 500HK Test Block	1,000gf
64HAA434	Knoop 800HK Test Block	1,000gf
64HAA432	Knoop 600HK Test Block	1,000gf
64HAA433	Knoop 700HK Test Block	1,000gf
64HAA435	Vickers 100HV Test Block	10kgf
64HAA436	Vickers 200HV Test Block	10kgf
64HAA437	Vickers 300HV Test Block	10kgf
64HAA438	Vickers 400HV Test Block	10kgf
64HAA439	Vickers 500HV Test Block	10kgf
64HAA440	Vickers 600HV Test Block	10kgf
64HAA441	Vickers 700HV Test Block	10kgf
64HAA442	Vickers 800HV Test Block	10kgf
64HAA443	Vickers 100HV Test Block	30kgf
64HAA444	Vickers 200HV Test Block	30kgf
64HAA445	Vickers 300HV Test Block	30kgf
64HAA446	Vickers 400HV Test Block	30kgf
64HAA447	Vickers 500HV Test Block	30kgf
64HAA448	Vickers 600HV Test Block	30kgf
64HAA449	Vickers 700HV Test Block	30kgf
64HAA450	Vickers 800HV Test Block	30kgf

*Other hardness ranges and test forces available

Indenters

Order No.	Type	Model
19BAA058	Vickers Indenter	HM-210 Series
19BAA059	Vickers Indenter	HM220
19BAA061	Knoop Indenter	HM-210 Series
19BAA062	Knoop Indenter	HM220
19BAA060	Vickers Indenter	HV Series
19BAA063	Knoop Indenter	HV Series

Universal Specimen Holder

Used to secure a specimen that has a measuring surface that is hard to stabilize perpendicular to the indenter axis.

810-020

Mounted Specimen Vise

1.5" (39mm) Max Height	Diameter	
810-650-1	1"	25.4mm
810-650-2		30mm
810-650-3	1.25"	31.75mm
810-650-4	1.5"	38.1mm
810-650-5		40mm

Rockwell Hardness Testing Machines

HR-300/400 Series

HR-320MS

Dual Type (Rockwell/ Rockwell Superficial) Hardness Testing Machine

Changing of weights is required. Motor drive controls loading sequence. Loading navigator provides feedback for applying preliminary force.

HR-430MR

Rockwell Hardness Testing Machine

Equipped with automatic brake handle for auto start feature. Motor drive controls loading sequence.

HR-430MS

Dual Type (Rockwell/ Rockwell Superficial Combined Use) Hardness Testing Machine

Equipped with automatic brake handle for auto start feature. Motor drive controls loading sequence.

The digital type (HR-430MR and HR-430MS) with the adoption of the automatic brake handle and load sequence.

Features

- The newly designed frame provides maximum clearance for positioning the workpiece. A flat table is all that is needed for mounting these testing machines.
- The digital type (HR-320MS, HR-430MR and HR-430MS) has digimatic output and our Digimatic Mini-Processor (DP-1VA LOGGER) to print and input tools (USB-ITN-E) to connect to a PC and use for data transfer.

SPECIFICATIONS

Model		HR-320MS	HR-430MR	HR-430MS
Order No		**810-192-31A**	**810-193-31A**	**810-194-31A**
Type of hardness test		Rockwell		
		Rockwell Superficial	–	Rockwell Superficial
Preliminary test force (N)		29.42, 98.07 (3Kgf, 10Kgf)	98.07 (10Kgf)	29.42, 98.07)3Kgf, 10Kgf)
Test force (N)	Superficial	147.1, 294.2, 441.3 (15Kgf, 30Kgf, 45Kgf)	–	147.1, 294.2, 441.3 (15Kgf, 30Kgf, 45Kgf)
	Rockwell	588.4, 980.7, 1471 (60Kgf, 100Kgf, 150Kgf)		
Standard		IS B 7726 ISO6508-2 ASTM E18		
Display		Digital		
Minimum reading		0.1 HR graduation		
Preliminary test force (handling support)		Loading navigator indication	Automatic brake handle	
Preliminary test force setting		Dial Switching	–	Dial switching
Total test force setting		Weight change	Dial switching	
Total test force control		Motor drive, Button start	Motor drive, Automatic start	
Test force duration		3-5.5 s setting, Manual	1-99 s setting, Manual	
Maximum specimen dimensions		Height 180 mm (100 mm if the cover is attached), depth 165 mm (from indenter axis to the frame)		
Function		Success or failure decision function		
		Offset revision function		
		Hardness converstion function		
Data output		Digimatic RS-232C		
Power supply		AC Input : 100-240 V, 50-60 Hz, 1.8 A, DC Output: 12 V – 4.17 A		
Dimensions		214 (W) x 512 (D) x 780 (H) mm		
Mass		Approximately 47kg	Approximately 50kg	

Hardness Testers are compliant with ASTM requirements
810-192-21A and **810-194-21A** come with diamond indenter, 1/16" carbide ball indenter, HRC30 Block, HRC63 Block, HRBW95 Block, HR30N 60 Block and HR30TW 70 Block
810-193-31A comes with diamond indenter, 1/16" carbide ball indenter, HRC30 Block, HRC63 Block, and HRBW95 Block

HR-530/530L

HR-530
(810-233-33A)

SERIES 810 — Rockwell Type Hardness Testing Machines

- Closed Loop Test Force Control allows for a wide variety of hardness testing including Rockwell, Superficial and Light Force Brinell (6.25 to 187.5 kgf).
- Hardness testing of plastics according to ASTM D785 (Proceedure A and B) and ISO 2039-2 are also possible.
- Projected nose type tester allows testing of interior parts
- 5 display formats are possible to show you the information you need. Statistics and graphs can also be displayed on the color touch screen control panel.
- Machine, blocks, and indenters are ASTM E18 compliant.
- Simple-to-use automatic brake-start system begins the test automatically when initial force is reached
- The HR-530 is available in 9.8" (250mm) or 15.5" (395mm) height capacity models.
- Complete with a combination diamond indenter, a 1/16" carbide ball indenter, one flat and one V anvil, 2 HRC, 1 HRBW, 1 HR30TW and 1 HR30N test block.

5.7-inch color LCD

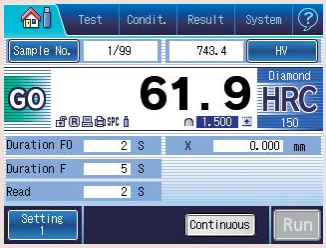

Standard operating display

Fine-adjustment table for Jominy testing
810-700

Optional Accessories: See page K-11, 12

Function: Touch-screen type
- Touch-screen operation with a back-lit LCD graphic display.
- Remote selection of the test force linked to the hardness scale selection.
- Choice of message language in English, German, French, Spanish, Italian and Japanese.
- Cylindrical and spherical surface compensation.
- Data offset.
- Conversion to other hardness scales.
- Powerful statistical processing with flexible data point editing and 1024 data memory.
- Measured data editing.
- Go/no-go tolerance judgment.
- Statistical processing, histogram and x̄-R chart.

SPECIFICATIONS

Model		HR-530	HR-530L
Order No.		**810-233-33A**	**810-333-33A**
Hardness testing methods		Rockwell/Rockwell Superficial/Brinell/Plastics hardness	
Initial test force (N)		29.42N (3kgf), 98.07N (10kgf)	
Test force (N)	Rockwell Superficial	147.1N (15kgf), 294.2N (30kgf), 441.3N (45kgf)	
	Rockwell	588.4N (60kgf), 980.7N (100kgf), 1471N (150kgf)	
	Light Force Brinell	61.29 (6.25kgf), 98.07 (10kgf), 153.2 (15.625kgf), 245.2 (25kgf), 294.2 (30kgf), 306.5 (31.25kgf), 612.9 (62.5kgf), 980.7 (100kgf), 1226 (125kgf), 1839 (187.5kgf)	
Test force control		Automatic (load/hold/unload)	
Table up/down mechanism		Manual (automatic braking and load sequencing)	
Control unit		Color touch-panel	
Test force switching		Operated with the display unit	
Test force hold time		1 to 120s (Selectable in units of 1s)	
Maximum specimen size		Height: 9.8" (250 mm) Depth: 5.9" (150 mm)	Height: 15.5" (395 mm) Depth: 5.9" (150 mm)
Permissible inside diameter of a tube specimen		Minimum hole diameter: 1.38" (35 mm) (when using the special indenter: .87" (22 mm))	
Maximum table loading		45 lb (20 kg)	
Ball indenter		Tungsten carbide ball indenter	
Unit (display unit)		inch	
Display		Hardness value, test condition, go/no-go judgment result, statistical calculation result, X-R control chart, hardness conversion value	
		Conversion function [HV, HK, HR (Rockwell hardness A, B, C, D, F, G / Rockwell Superficial 15T, 30T, 45T, 15N, 30N, 45N), HS, HB, tensile strength]	
		Go/no-go judgment function	
		Continuous test function (for specimens with the same thickness)	
		Cylindrical correction, spherical correction, offset correction, multi-point correction functions	
		Statistical calculation function (maximum value, minimum value, mean value, standard deviation, upper limit value, lower limit value, go count, range, no-go count)	
		Graph generation function (X-R control chart)	
Language support		Japanese, English, German, French, Italian, Spanish, Korean, Chinese (simplified characters/ traditional characters), Turkish, Portuguese, Hungarian, Polish, Dutch and Czech	
External data output		RS-232C, SPC, USB2.0	
Power supply		AC120V	
External dimensions	Main unit	9.84" x 26.38" x 23.82" (250(W)×667(D)×621(H) mm)	11.8" x 26.2" x 30.1" (300(W)×667(D)×766(H) mm)
	Touch-panel display	191(W)×147(D)×71(H) mm	
Mass		Approx. 60 kg	Approx. 69 kg

Note: Plastic testing may not be enabled, depending on the material.

K

Mitutoyo

Optional Accessories

For Rockwell/Rockwell Superficial Type Hardness Testing machine

Round table
810-038 Outside ø250 mm

For large specimens such as molded items

Round table
810-037 Outside ø180 mm

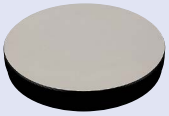

For large specimens such as molded items

V-anvil (large)
810-040

(Outside ø40 mm,
Groove width 30 mm)

For round specimens (max. ø60 mm)

V-anvil (small)
810-041

(Outside ø40 mm,
Groove width 6 mm)

For shaft materials (max. ø8.4 mm)

Spot anvil
810-043

(Outside ø12 mm)

Spot anvil
810-044

(Outside ø5.5 mm)

For sheet specimens

Jack rest
810-028

For supporting long specimens
(Used with anvil or round table)

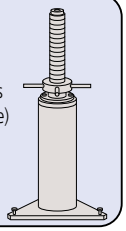

VARI-REST
810-027

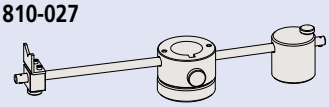

For testing long specimens (commonly used for the anvil)

Special V-anvil
810-029

(Length 400 mm,
Groove width 50 mm)

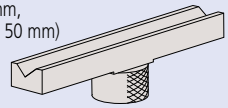

For round specimens ø14-98 mm

Diamond-spot anvil
810-030

(Outside ø10 mm)

For sheet specimens

*Dedicated to the Rockwell Superficial hardness test

Small V-anvil
810-042

(Outside ø10 mm)

For round specimens (max. ø16 mm)

Testing machine table
11AAD186

Supplied with
stability bracket

Testing machine table

Vibration isolator
810-643

Only for mounting hardness testing machines

Foot switch
11AAD537

Digimatic mini-processor
DP-1VA
264-506A

Connection cable not supplied. (To be ordered separately.)

937386

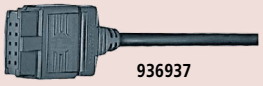

936937

Optional Accessories

HM200 and HR-530 Series:

06AFM380D: USB input tool – Tester to PC
936937: Tester to DP1-VA Printer

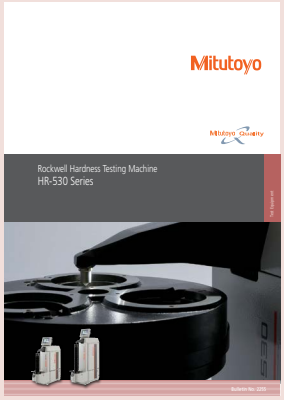

Refer to **HR-530** Series Brochure (**2255**) for more details.

K

Optional Accessories

Rockwell Type Diamond Indenters

Scale	Mitutoyo Round Style Order No.	Universal w/ Flat Style Order No.
C	64HAA105	64HAA100
N	64HAA106	64HAA101
C&N	64HAA107	64HAA104
A		64HAA102
"A" for Carbides		64HAA103

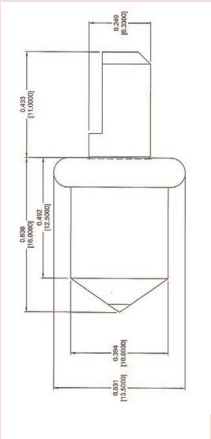

Universal with Flat

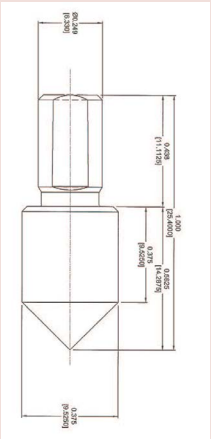

Round Style

Test Blocks and Diamond Indenters

Test Blocks

Rockwell Test Blocks

Order No.	Hardness
64HAA145	HRA22 Rockwell Test Block
64HAA147	HRA30 Rockwell Test Block
64HAA149	HRA39 Rockwell Test Block
64HAA151	HRA49 Rockwell Test Block
64HAA153	HRA63 Rockwell Test Block
64HAA155	HRA68 Rockwell Test Block
64HAA157	HRA73 Rockwell Test Block
64HAA159	HRA78 Rockwell Test Block
64HAA161	HRA83 Rockwell Test Block
64HAA163	HRBW0 Rockwell Test Block
64HAA164	HRBW10 Rockwell Test Block
64HAA165	HRBW20 Rockwell Test Block
64HAA166	HRBW30 Rockwell Test Block
64HAA167	HRBW40 Rockwell Test Block
64HAA168	HRBW50 Rockwell Test Block
64HAA169	HRBW60 Rockwell Test Block
64HAA170	HRBW70 Rockwell Test Block
64HAA171	HRBW80 Rockwell Test Block
64HAA172	HRBW95 Rockwell Test Block
64BAA124	HRC40/45 Rockwell Test Block
64BAA123	HRC30/35 Rockwell Test Block
64BAA158	HRC20/25 Rockwell Test Block
64HAA173	HRC25 Rockwell Test Block
64HAA174	HRC30 Rockwell Test Block
64HAA175	HRC35 Rockwell Test Block
64HAA176	HRC40 Rockwell Test Block
64HAA177	HRC45 Rockwell Test Block
64HAA178	HRC50 Rockwell Test Block
64HAA179	HRC55 Rockwell Test Block
64HAA180	HRC60 Rockwell Test Block
64HAA181	HRC63 Rockwell Test Block
64HAA182	HRC65 Rockwell Test Block
64HAA183	HRC67 Rockwell Test Block
64HAA193	HREW57 Rockwell Test Block
64HAA194	HRE62 Rockwell Test Block
64HAA195	HRE68 Rockwell Test Block
64HAA196	HRE75 Rockwell Test Block
64HAA197	HRE81 Rockwell Test Block
64HAA198	HRE87 Rockwell Test Block
64HAA199	HRE93 Rockwell Test Block
64HAA200	HRE99 Rockwell Test Block
64BAA156	HR15T61/63 Rockwell Test Block

* Please inquire for other hardness ranges

Test Blocks

Superficial Test Blocks

Order No.	Hardness
64HAA251	HR15N 72 Rockwell Test Block
64HAA253	HR15N 78 Rockwell Test Block
64HAA255	HR15N 83 Rockwell Test Block
64HAA257	HR15N 88 Rockwell Test Block
64HAA259	HR15N 91 Rockwell Test Block
64HAA261	HR15N 94 Rockwell Test Block
64HAA262	HR30N 46 Rockwell Test Block
64HAA264	HR30N 55 Rockwell Test Block
64HAA266	HR30N 64 Rockwell Test Block
64HAA268	HR30N 73 Rockwell Test Block
64HAA270	HR30N 80 Rockwell Test Block
64HAA272	HR30N 86 Rockwell Test Block
64HAA273	HR45N 25 Rockwell Test Block
64HAA276	HR45N 43 Rockwell Test Block
64HAA278	HR45N 55 Rockwell Test Block
64HAA280	HR45N 67 Rockwell Test Block
64HAA282	HR45N 72 Rockwell Test Block
64HAA284	HR15TW 61 Rockwell Test Block
64HAA286	HR15TW 67 Rockwell Test Block
64HAA288	HR15TW 73 Rockwell Test Block
64HAA290	HR15TW 80 Rockwell Test Block
64HAA292	HR15TW 86 Rockwell Test Block
64HAA294	HR30TW 15 Rockwell Test Block
64HAA296	HR30TW 28 Rockwell Test Block
64HAA298	HR30TW 43 Rockwell Test Block
64HAA300	HR30TW 56 Rockwell Test Block
64HAA302	HR30TW 70 Rockwell Test Block
64HAA304	HR45TW 2 Rockwell Test Block
64HAA306	HR45TW 23 Rockwell Test Block
64HAA308	HR45TW 42.5 Rockwell Test Block
64HAA310	HR45TW 67 Rockwell Test Block
64HAA278	HR45N 55 Rockwell Test Block
64HAA280	HR45N 67 Rockwell Test Block
64HAA282	HR45N 72 Rockwell Test Block

Calibration Set

Order No. 64HAA462	Order No. 64HAA463	Order No. 64HAA464	Order No. 64HAA465
HRC Scale	HRBW Scale	HR30N Scale	HR30TW Scale
Test Blocks	Test Blocks	Test Blocks	Test Blocks
64HAA181	64HAA172	64HAA270	64HAA303
64HAA177	64HAA170	64HAA266	64HAA301
64HAA173	64HAA168	64HAA262	64HAA299
Universal Style Indenter with Flat			
64HAA100	64HAA119	64HAA101	64HAA119

Carbide Ball Indenters

Description	Universal w/ Flat Style Order No.
1/16" Carbide ball indenter	64HAA119
1/8" Carbide ball indenter	64HAA122
1/4" Carbide ball indenter	64HAA124
1/2" Carbide ball indenter	64HAA126
1/16" Carbide ball (10pc.)	64HAA131
1/8" Carbide ball (1pc.)	64HAA133
1/4" Carbide ball (1pc.)	64HAA135
1/2" Carbide ball (1pc.)	64HAA137

Steel Indenters/Balls Available Upon Request

Where to Buy

K

Mitutoyo

Hardness Testing Machines

HR-600
SERIES 810 — CNC Rockwell Hardness Testing Machines

- A workpiece that cannot be placed on a tester due to its large size can be placed on the stage of this product and tested as-is. (Maximum loading mass 100 kg)
- The motorized stage makes automatic multi-point testing at multiple places and of multiple workpieces possible.
- Plastic hardness testing is also available in addition to Rockwell/Brinell tests on metal. Brinell and Vickers indentation hardness tests which do not require vision measurement can also be performed.
- ASTM E18 compliant
- The **HR-610A**/**620A** is operable with a touch panel display (some functions are operable with **AVPAK** software) and the **HR-620B** is operable with a touch panel display and **AVPAK** software.
- Automatic testing by moving in the X-, Y- and Z-axis directions for workpieces with uneven surfaces or steps is made possible by adding X-axis stage and **AVPAK** software to **HR-620B**, which is equipped with a motorized Y-axis stage as standard. Also, using **FORMEio** software makes easy communication with PLCs for automation purposes, such as control of handling devices and work cells, possible.

HR-610A
(Motorized X-axis stage is available)

HR-620B
(With a motorized Y-axis stage as standard and an optional motorized X-axis stage)

SPECIFICATIONS

Model		HR-610A	HR-620A	HR-620B
Order No.		**810-512-23A**	**810-522-23A**	**810-526-11A**
Unit (display unit)		Rockwell/Rockwell Superficial/Brinell/Plastics hardness		
Indenter type *1		Diamond indenter and 1/16th inch carbide ball indenter		
Test force range		29.42 - 1839 N (3 - 187.5 kgf)	9.807 - 2452 N (1 - 250 kgf)	
Specimen height (Z-axis stroke)		40 - 250 mm		
Testable workpieces	Minimum surface dimensions	18 x 4 mm		
	Minimum inner diameter of pipe-type workpiece	ø400 mm		
	Concave workpiece	R25 mm or more, Height 20 mm or less		
	Minimum outside diameter	ø20 mm (See Figure 4)		
Z-axis speed		Approx. 10 mm/s		
Maximum depth (from indenter center)		220 mm		
X-axis stroke		None (Option: 160 mm or 300 mm)		
Y-axis stroke		None		160 mm (±80 mm)
Y-axis speed		–		Approx. 50 mm/s
Y-axis feed error		–		±0.1 mm or less
Maximum table loading		100 kg		
Power supply		AC100 - 200 V 50/60 Hz		
Mass		176 kg	181 kg	205 kg

Hardness Testers are compliant with ASTM requirements
All HR-600 machines come with diamond indenter, 1/16" carbide ball indenter, HRC30 block, HRC 63 block, HRBW 95 block, HR30N 60 block, and HR30TW 70 block

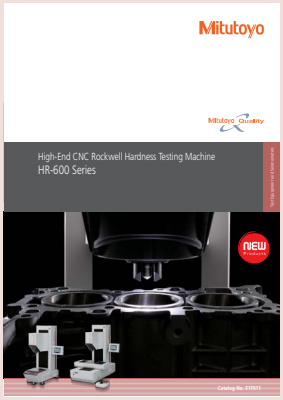

Refer to the **HR-600** Series Brochure (**2295**) for more details.

Hardmatic HH-V400

SERIES 810 — Impact Type Hardness Testing Unit

HH-V400 is Mitutoyo's newly designed rebound-type portable tester for metals with a compact body & high operability.

- LCD Interface
- Ability to store 1800 measurements
- Maintain up to 100 control groups
- Preform statistical analysis on measured data
- Rechargeable - No Batteries Required

810-306: HH-V400 ASTM compliant rebound tester

Includes Display unit - **11AAE901** & D Type Detector **11AAE902**

Standard Accessories

11AAE901: Display unit
12BAS450: AC adapter
12BAS451: USB 2.0 cable (Type A-C)
11BAB687: Handle
11AAA857: Small support ring (ø14 mm)
05CAA952: Phillips screwdriver
11PAA429: Storage box
99MBG538B: Quick start guide
99MBG537A: Instruction manual

Optional Accessories

11AAE902: Detector D
11AAE903: Detector DC
11AAE904: Detector D +15
11AAE905: Detector DL
11AAD240: Hardness test block
19BAA248: Support ring for convex cylindrical surfaces (R10 to 20 mm)
19BAA249: Support ring For concave cylindrical surfaces (R14 to 20 mm)
19BAA250: Support ring for convex spherical surfaces (R10 to 27.5 mm)
19BAA251: Support ring for concave spherical surfaces (R13.5 to 20 mm):)
19BAA457: Carbide ball for Detectors D, DC, and D +15
19BAA458: Replacement ball shaft for Detector DL

Calibration Blocks

64HAA467: 520 HLD range leeb hardness standard
64HAA468: 630 HLD range leeb hardness standard
64HAA469: 730 HLD range leeb hardness standard
64HAA470: 800 HLD range leeb hardness standardl

Mitutoyo

Get a Quote

SPECIFICATIONS

Model		HH-V400
Order No.		**810-306**
Testing hardness and range		Leeb hardness: 100.0 to 999.9 HLD
Testing direction		Omnidirectional (with automatic angle-correcting function)
Hardness scale conversion function* (Conversion range varies depending on material)		Vickers hardness: 43 to 950 HV
		Brinell hardness: 20 to 655 HB
		Rockwell hardness (C-scale): 19.3 to 68.2 HRC
		Rockwell hardness (B-scale): 13.5 to 101.7 HRB
		Shore hardness: 30.1 to 99.5 HS (ASTM) 13.2 to 98.6 HS (JIS)
		Tensile strength: 390 to 1999 MPa
Sample conditions		Minimum thickness: 5 mm
		Minimum mass: 5 kg
		Testing position: At least 5 mm from the edge of the sample and at least 3 mm between test points
		Surface roughness: Ra 2.0 or less
Functions		Automatic angle correction, offset setting, acceptance judgment, hardness scale conversion, data memory storage (1800 points), statistical calculation function, eco mode, auto power-off, backlight
Detector	Type	Detector D (standard type), impact hammer, with carbide ball at the tip
	Dimensions	ø28 x 175 mm (excluding cable)
	Mass	Approx. 150 g
Display unit	Screen	2.83'' (240 x 320 pixels), RGB color LCD
	Dimensions	174 x 68 x 32 mm
	Mass	Approx. 250 g
Power supply		C adapter, built-in battery (Ni-MH) (Up to 8 hours of operation after 100 minutes of charging)

* HH-V400 guarantees the indicated values based on Leeb hardness. Converted values are for reference only.

Detector Conversion Ranges

Detector D, DC

Material	HV/Vickers	HB/Brinell	HRC/Rockwell C	HRB/Rockwell B	HS (ASTM)/Shore	VHS (JIS)/Shore	MPa/Tensile strength
Iron and steel	80 to 940	80 to 647	20.0 to 68.0	38.4 to 99.5	30.1 to 99.5	13.2 to 98.0	390 to 1999
Alloyed tool-steel	80 to 898	—	20.4 to 67.1	—	—	—	—
Gray iron	—	93 to 334	—	—	—	—	—
Spherical graphite cast iron	—	131 to 387	—	—	—	—	—
Stainless steel	85 to 802	85 to 655	19.6 to 62.4	46.5 to 101.7	—	—	—
Brass	43 to 196	40 to 173	—	13.5 to 95.3	—	—	499 to 701
Casting copper-based alloys	—	45 to 315	—	—	—	—	—
Casting aluminum-based alloys	—	20 to 159	—	—	—	—	—
Copper-tin-based alloys	—	60 to 290	—	—	—	—	—

Detector D +15

Material	HV/Vickers	HB/Brinell	HRC/Rockwell C	HRB/Rockwell B	HS (ASTM)/Shore	VHS (JIS)/Shore	MPa/Tensile strength
Iron and steel	80 to 937	80 to 638	19.3 to 67.9	—	33.3 to 99.3	35.3 to 97.8	394 to 1991
Tool steels for cold-work	80 to 935	—	19.8 to 68.2	—	—	—	—

Detector DL

Material	HV/Vickers	HB/Brinell	HRC/Rockwell C	HRB/Rockwell B	HS (ASTM)/Shore	VHS (JIS)/Shore	MPa/Tensile strength
Iron and steel	80 to 950	81 to 638	20.6 to 68.2	37.0 to 99.9	30.6 to 96.8	32.3 to 98.6	390 to 1976

Hardmatic HH-300

SERIES 811 — Durometers for Rubber and Plastics Hardness Testing

Digital / Dial Durometers are suitable for testing the nature of the following materials like natural rubber, neoprene, polyesters, P.V.C., leather, nitrite rubber, wax, vinyl, cellulose acetates, glass polystyrene, etc.

Compact Digital
Compact Dial

811-336-10
811-335-10

Long Leg Digital
Long Leg Dial

811-332-10
811-331-10

Technical Data

- Designed in accordance with the ASTM D 2240, ISO868, ISO 7619, DIN 53 505, JIS K 6253, and JIS K 7215 specifications.
- Units are available in both Shore A and Shore D scales, and will test a wide variety of applications.
- The Digital Durometer is provided with data hold function, permitting the operator to make an error-free reading on the LCD screen.
- The Dial Durometer is provided with a peak retaining hand for error-free reading.

SPECIFICATIONS

Model No.	Digital	HH-330	HH-336	HH-336	HH-332	HH-338	HH-338	HH-334
	Dial	HH-329	HH-335	HH-335	HH-331	HH-337	HH-337	HH-333
Order No.	Digital	**811-330-10**	**811-336-10**	**811-336-11**	**811-332-10**	**811-338-10**	**811-338-11**	**811-334-10**
	Dial	**811-329-10**	**811-335-10**	**811-335-11**	**811-331-10**	**811-337-10**	**811-337-11**	**811-333-10**
Scale		Shore E	Shore A			Shore D		
Applications		Soft Rubber, Sponge, Felt, Hard Foam	Natural rubber, soft elastomers, etc.			Hard elastomers, plastics, hard rubber, ebonite, etc.		
Resolution		0.1 (digital) or 1 (dial)				0.1 (digital) or 1 (dial)		
Range		HA: 10 - 90				HD: 20 - 90		
Standards	ASTM D 2240	—	✓	✓		✓	✓	
	ISO 868	—	✓	✓		✓	✓	
	ISO 7619	—	✓	✓		✓	✓	
	DIN 53 505	—	—	✓		—	✓	
	JIS K 6253	✓	✓	✓		✓	✓	
	JIS K 7215	—	✓	✓		✓	✓	
Presser foot		44 x 18mm	44 x 18mm	ø18mm		44 x 18mm	ø18mm	
Spring force (mN)		WE=550+HE	WA=550+75HD (HA:Reading 10-90)			WD=444.5HD (HD:Reading 20-90)		
Indenter		Sphere (Tip diameter: 0.79mm)	Blunt taper (Tip diameter: 0.79mm)			Sharp point (Tip curvature: 0.1±0.01mm)		
Tip angle		—	35°±0.25°			30°±0.5°		
Indenter diameter		5mm	1.25mm					
Indenter protrusion		2.5mm						
Functions		Digital: Data hold, Zero -setting, SPC output, Power ON/OFF (Power supply: SR44 x 1pc.) Analog Durometer: Peak retaining hand						
Type		Compact	Compact		Long-leg	Compact		Long-leg
Dimensions (WxDxH)	Digital	60 x 28.5 x 151	60 x 28.5 x 151mm		60 x 28.5 x 193mm	60 x 28.5 x 151mm		60 x 28.5 x 193mm
	Dial	56 x 33.5 x 144mm	56 x 33.5 x 144mm		56 x 33.5 x 186mm	56 x 33.5 x 144mm		56 x 33.5 x 186mm
Mass	Digital	290g	290g		310g	290g		310g
	Dial	300g	300g		320g	300g		320g

Testing Stand Applications

These stands are used to mount Durometers. They allow constant-pressure hardness measurement by pressing the Durometer vertically on a workpiece.

- Anyone can perform repeatable hardness measurement due to fewer possibilities of human error and measurement variations.
- The supplied weights can be attached directly to a Durometer and allow constant-pressure hardness measurement of large samples for which a stand cannot be used.
- The supplied weights are used for calibrating the spring tension of Durometers.

Test Block Set

64AAA964

64AAA963

64AAA796 - "A" & "D" Scale Durometer Stand

905693

811-332-10

264-506A

Order No.	Description
64AAA964	Calibration Set (Shore A Scale) Test Block 30* DURO (Blue) Test Block 60* DURO (Yellow) Test Block 90* DURO (Gray) Mahogany Box
64AAA590	Calibration Set (Shore D Scale) Test Block 20* DURO (Blue) Test Block 40* DURO (Gray) Test Block 80* DURO (Black)
64AAA962	"A" Scale Durometer Stand
64AAA794	"A" Scale Durometer Stand with Air Damper
64AAA796	Combination "D" & "A" Scale Durometer Stand
64AAA963	O-Ring Fixture Set 1/16", 3/32", 1/8", 3/16" and 1/4" O-Ring cross sections
264-506A	Digimatic Miniprocessor with printer
905693	Connecting Cable 40" (1m) for Durometer and Digimatic Miniprocessor

* Values shown are nominal only. Test Block Size 2" x 2" x 1/4"

Need Support?

K

Hardness Test Methods and Guidelines for Selection of a Hardness Testing Machine

Test Method / Material	Micro Vickers	Micro surface material characteristics	Vickers	Rockwell	Rockwell Superficial	Durometer	Rebound type portable	Brinell	Shore
Material									
IC wafer	●	●							
Carbide, ceramics (cutting tool)		▲	●	●					
Steel (heat-treated material, raw material)	●	▲	●	●	●		●		●
Non-ferrous metal	●	▲	●	●	●		●		
Plastic		▲		●		●			
Grinding wheel				●					
Casting								●	
Sponge, rubber						●			
Shape									
Thin metal sheet (safety razor, metal foil)	●	●	●		●				
Thin film, plating, painting, surface layer (nitrided layer)	●	●							
Small parts, acicular parts (clock hand, sewing-machine needle)	●	▲							
Large specimen (structure)							●	●	●
Metallic material configuration (hardness for each phase of multilayer alloy)	●	●							
Plastic plate	▲	▲		●		●			
Sponge, rubber plate						●			
Inspection, judgment									
Strength or physical property of materials	●	●	●	●	●	●	▲	●	●
Heat treatment process	●		●	●	●		▲		▲
Carburized case depth	●		●						
Decarburized layer depth	●		●		●				
Flame or high-frequency hardening layer depth	●		●	●					
Hardenability test			●	●					
Maximum hardness of a welded spot			●						
Weld hardness			●	●					
High-temperature hardness (high-temperature characteristics, hot-workability)			●						
Fracture toughness (ceramics)	●		●						

Key: ● Well-suited ▲ Reasonably suited

Methods of Hardness Measurement

(1) Vickers

Vickers hardness is a test method that has the widest application range, allowing hardness inspection with an arbitrary test force. This test has an extremely large number of application fields particularly for hardness tests conducted with a test force less than 9.807N (1kgf). As shown in the following formula, Vickers hardness is a value determined by dividing test force F (N) by contact area S (mm^2) between a specimen and an indenter, which is calculated from diagonal length d (mm, mean of two directional lengths) of an indentation formed by the indenter (a square pyramidal diamond, opposing face angle θ=136°) in the specimen using a test force F (N). k is a constant ($1/g$=1/9.80665).

$$HV=k\frac{F}{S}=0.102\frac{F}{S}=0.102\frac{2F\sin\frac{\theta}{2}}{d^2}=0.1891\frac{F}{d^2}$$

F:N
d:mm

The error in the calculated Vickers hardness is given by the following formula. Here, Δd_1, Δd_2, and 'a' represent the measurement error that is due to the microscope, an error in reading an indentation, and the length of an edge line generated by opposing faces of an indenter tip, respectively. The unit of $\Delta\Delta$ is degrees.

$$\frac{\Delta HV}{HV} \fallingdotseq \frac{\Delta F}{F} - 2\frac{\Delta d_1}{d} - 2\frac{\Delta d_2}{d} - \frac{a^2}{d^2}\ 3.5\times10^{-3}\Delta\Delta$$

(2) Knoop

As shown in the following formula, Knoop hardness is a value obtained by dividing test force by the projected area A (mm^2) of an indentation, which is calculated from the longer diagonal length d (mm) of the indentation formed by pressing a rhomboidal diamond indenter (opposing edge angles of 172°30' and 130°) into a specimen with test force F applied. Knoop hardness can also be measured by replacing the Vickers indenter of a microhardness testing machine with a Knoop indenter.

$$HK=k\frac{F}{A}=0.102\frac{F}{A}=0.102\frac{F}{cd^2}=1.451\ \frac{F}{d^2}$$

F:N
d:mm
c:Constant

(3) Rockwell and Rockwell Superficial

To measure Rockwell or Rockwell Superficial hardness, first apply a preload force and then the test force to a specimen and return to the preload force using a diamond indenter (tip cone angle: 120°, tip radius: 0.2mm) or a sphere indenter (steel ball or carbide ball). This hardness value is obtained from the hardness formula expressed by the difference in indentation depth h (μm) between the preload and test forces. Rockwell uses a preload force of 98.07N, and Rockwell Superficial 29.42N. A specific symbol provided in combination with a type of indenter, test force, and hardness formula is known as a scale. Japanese Industrial Standards (JIS) define various scales of related hardness.

Relationship Between Vickers Hardness and the Minimum Allowable Thickness of a Specimen

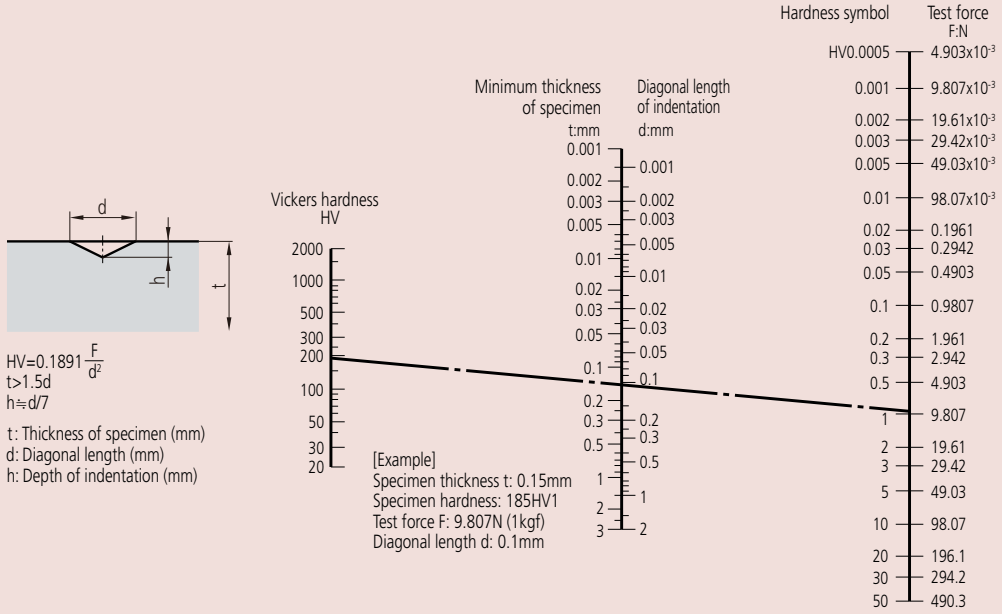

Relationship Between Rockwell/Rockwell Superficial Hardness and the Minimum Thickness of a Specimen

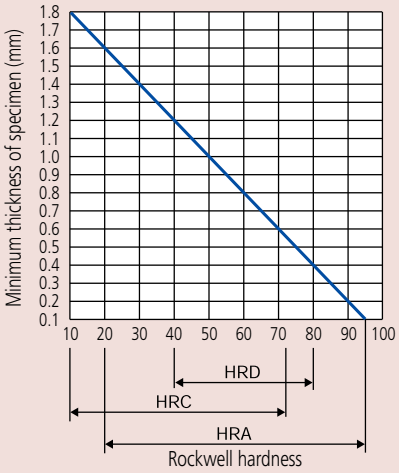

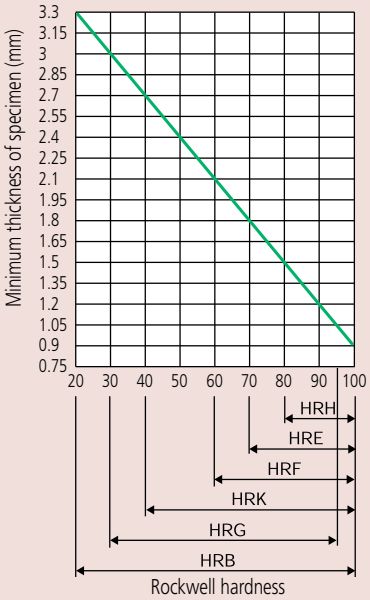

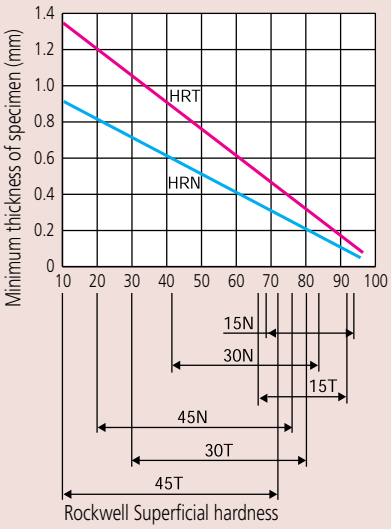

Rockwell Hardness Scales

Scale	Indenter	Test force	Application
A	Diamond	588.4N	Carbide, sheet steel
D		980.7N	Case-hardened steel
C		1471N	Steel (100HRB or more to 70HRC or less)
F	Sphere of 1.5875mm diameter	588.4N	Bearing metal, annealed copper
B		980.7N	Brass
G		1471N	Hard aluminum alloy, beryllium copper, phosphor bronze
H	Sphere of 3.175mm diameter	588.4N	Bearing metal, grinding wheel
E		980.7N	Bearing metal
K		1471N	Bearing metal
L	Sphere of 6.35mm diameter	588.4N	Plastic, lead
M		980.7N	
P		1471N	
R	Sphere of 12.7mm diameter	588.4N	Plastic, lead
S		980.7N	
V		1471N	

Rockwell Superficial Hardness Scales

Scale	Indenter	Test force	Application
15-N	Diamond	147.1N	Thin surface-hardened layer on steel such as carburized or nitrided
30-N		294.2N	
45-N		441.3N	
15-T	Sphere of 1.5875mm diameter	147.1N	Sheet of mild steel, brass, bronze, etc.
30-T		294.2N	
45-T		441.3N	
15-W	Sphere of 3.175mm diameter	147.1N	Plastic, zinc, bearing alloy
30-W		294.2N	
45-W		441.3N	
15-X	Sphere of 6.35mm diameter	147.1N	Plastic, zinc, bearing alloy
30-X		294.2N	
45-X		441.3N	
15-Y	Sphere of 12.7mm diameter	147.1N	Plastic, zinc, bearing alloy
30-Y		294.2N	
45-Y		441.3N	

Mitutoyo

Featured Products

Shop-floor Type CNC Coordinate Measuring Machine

MiSTAR Series

Refer to page L-3 for details.

CNC Coordinate Measuring Machine

CRYSTA-Apex V PLUS Series (500/700/900)

Refer to page L-4 for details.

CRYSTA-Apex V Series (1200/1600/2000)

Refer to page L-5 for details.

NEW Mitutoyo Probes

MPP-002 Scanning Probe

Refer to page L-15 for details.

MPT-002 Tactile Probe

Refer to page L-16 for details.

An online system to monitor the operational and mechanical statuses of measuring machines. This allows you to grasp the state of a process flow from the operational status of measuring machines within a production process.

Products equipped with the measurement data output function can be connected to the measurement data network system MeasurLink® (refer to page A-3 for details).

L

Coordinate Measuring Machines

INDEX

CMM

MiSTAR 555/575	L-3
CRYSTA-Apex V PLUS Series 500/700/900	L-4
CRYSTA-Apex V Series 1200/1600/2000	L-5
CRYSTA-Apex EX 1200R Series	L-6
STRATO-Apex Series	L-7
STRATO-Active/STRATO-Apex G	L-8
LEGEX TAKUMI Series	L-9
CARBstrato	L-10
MACH-3A 653	L-11
MACH-V9106	L-11
MACH KO-GA-ME	L-12
MCOSMOS	L-13
MiCAT Planner	L-14
Mitutoyo Probes	L-15,16
Scanning Probes	L-17,18
SurfaceMeasure	L-19
MSURF	L-20
Mitutoyo ECO-FIX Fixture Systems	L-21,22
Mitutoyo Styli Kits	L-23,24

Coordinate Measuring Systems

Precision Measuring Technology in Three Dimensions

Shop-floor Type CNC Coordinate SERIES 357 — MiSTAR 555/575

SMS Smart Measuring System

MeasurLink® ENABLED
Data Management Software by Mitutoyo

- An accuracy-guaranteed temperature range of 10 to 40° C is possible thanks to a combination of technologies, such as the symmetric guide structure, uniform material and temperature compensation.
- A contamination resistance more than 2 times better than conventional Mitutoyo CMMs is achieved by adopting a newly developed environment-resistant ABSOLUTE scale*.

  * ABSOLUTE scale that provides an absolute XYZ-values relative to an internal reference point for each coordinate captured. This eliminates the need for an initialization operation.
- The footprint is reduced to about 80% compared to conventional moving bridge models by adopting the horizontal-arm structure and installing the CMM controller and PC under the measuring table.
- Design allows open access from 3 sides.

MiSTAR 555

See how the MiSTAR 555 Improved Lights-Out Production for Acutec Precision Aerospace

Acutec News

Acutec Testimonial

SMS Smart Measuring System

Status monitoring boosts uptime with timely adjustments and alerts for events like busy, idle, or maintenance. Operators can optimize machine use and repurpose idle instruments for measuring other parts.

MeasurLink® ENABLED
Data Management Software by Mitutoyo

Products equipped with the measurement data output function can be connected to the measurement data network system MeasurLink® (refer to page A-3 for details).

Equipped with the **PH10MQ** probe head

MRT240
Rotary table diameter 240 mm

SPECIFICATIONS

25.4 mm = 1.0 inch

Items \ Model		MiSTAR 555	MiSTAR 575
Measuring range	X-axis	570 mm	570 mm
	Y-axis	500 mm	700 mm
	Z-axis	500 mm	500 mm
Maximum permissible length measurement error*1*2 ISO 10360-2: 2009 (18 to 22° C)		2.2 + 3L/1000 µm	
Drive speed		5 to 350 mm/s (max. combined speed 606 mm/s) in CNC MODE	
Drive acceleration		1556 mm/s² (max. combined acceleration 2695 mm/s²)	
Workpiece	Max. height	660 mm	
	Max. loading	120 kg	180 kg
Accuracy guaranteed temperature range		10 to 40° C	
Mass (including the controller and installation platform)		655 kg	805 kg

*1 Specifications vary by configuration, size, and thermal environment.
*2 L = Measuring length (unit: mm)
Note1: While the appearance of the natural stone measuring table varies according to the source, the high stability for which this material is known can always be relied upon.
Note2: For information about guaranteed accuracy outside of the 18 to 22° C temperature range, contact your nearest M³ Solution Center.

Refer to the **MiSTAR Series** Brochure (**B2321(3)**) for more details.

L

Status monitoring boosts uptime with timely adjustments and alerts for events like busy, idle, or maintenance. Operators can optimize machine use and repurpose idle instruments for measuring other parts.

Products equipped with the measurement data output function can be connected to the measurement data network system MeasurLink® (refer to page A-3 for details).

Coordinate Measuring Systems

Precision Measuring Technology in Three Dimensions

Standard CNC CMM SERIES 191 — CRYSTA-Apex V PLUS Series 500/700/900

- Combines precise measurement performance (1.8 µm), high speed, and high acceleration with a range of model sizes to support diverse part applications.
- Delivers more than twice the contamination resistance of conventional CMMs, with the Mitutoyo ABSOLUTE scale* supporting consistent, reliable measurement in real-world production conditions.

* Provides an absolute value for each point, eliminating initialization.

- Maintains guaranteed accuracy within 16–26 °C (61–79 °F), with an extended 15–30 °C (59–86 °F) range that allows precision measurement to move directly onto the shop floor.
- Air Saving Option cuts operating costs by shutting off air supply and servo power when idle.

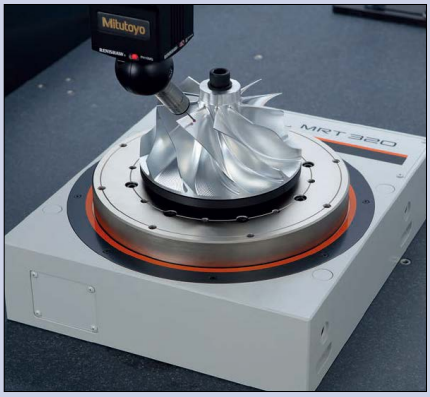

MRT320
Rotary table diameter 320 mm

CRYSTA-Apex V PLUS574

CRYSTA-Apex V PLUS7106

CRYSTA-Apex V PLUS9106

Find a Distributor

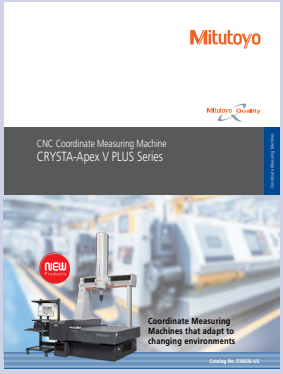

Refer to the **CRYSTA-Apex V PLUS Series** Brochure (**E16036-US**) for more details.

SPECIFICATIONS

25.4 mm = 1.0 inch

Items \ Model		CRYSTA-Apex V PLUS544	CRYSTA-Apex V PLUS574	CRYSTA-Apex V PLUS776	CRYSTA-Apex V PLUS7106
Measuring range	X-axis	500 mm		700 mm	
	Y-axis	400 mm	700 mm	700 mm	1000 mm
	Z-axis	400 mm		600 mm	

Items \ Model		CRYSTA-Apex V PLUS9106 (Z600)/9108 (Z800)	CRYSTA-Apex V PLUS9166 (Z600)/9168 (Z800)	CRYSTA-Apex V PLUS9206 (Z600)/9208 (Z800)
Measuring range	X-axis	900 mm		
	Y-axis	1000 mm	1600 mm	2000 mm
	Z-axis	600 mm/800 mm		

Note: While the appearance of the natural stone measuring table varies according to the source, the high stability for which this material is known, can always be relied upon.

CRYSTA-Apex V PLUS Series

Series	Probe used	Length measurement error*1 ISO 10360-2: 2009
500/700/900 Series	**SP25M**	$E_{0,MPE}$=1.8 + 3L/1000*2

*1 Specifications vary by configuration, size, and thermal environment.
*2 L = Measuring length (unit: mm)

L

Coordinate Measuring Systems

Precision Measuring Technology in Three Dimensions

Standard CNC CMM
SERIES 191 — CRYSTA-Apex V
Series 1200/1600/2000

SMS Smart Measuring System

MeasurLink® ENABLED
Data Management Software by Mitutoyo

- The **CRYSTA-Apex V1200/1600/2000** Series are large-sized CNC CMMs developed for supporting quality evaluation of large parts.
- Equipped with a temperature compensation system that guarantees the specified accuracy within the wide range of 16 to 26° C for **CRYSTA-Apex V1200** and 16 to 24° C for **V1600/2000** under certain environmental conditions, although high-accuracy CMMs should ideally be installed in a temperature-controlled room.

CRYSTA-Apex V122010

CRYSTA-Apex V162012

SPECIFICATIONS

25.4 mm = 1.0 inch

Items \ Model		CRYSTA-Apex V121210	CRYSTA-Apex V122010	CRYSTA-Apex V123010
Measuring range	X-axis	1200 mm		
	Y-axis	1200 mm	2000 mm	3000 mm
	Z-axis	1000 mm		

Items \ Model		CRYSTA-Apex V162012 (Z1200)/V162016 (Z1600)	CRYSTA-Apex V163012 (Z1200)/V163016 (Z1600)	CRYSTA-Apex V164012 (Z1200)/V164016 (Z1600)
Measuring range	X-axis	1600 mm		
	Y-axis	2000 mm	3000 mm	4000 mm
	Z-axis	1200 mm/1600 mm		

Items \ Model		CRYSTA-Apex V203016	CRYSTA-Apex V204016
Measuring range	X-axis	2000 mm	
	Y-axis	3000 mm	4000 mm
	Z-axis	1600 mm	

Note: While the appearance of the natural stone measuring table varies according to the source, the high stability for which this material is known, can always be relied upon.

CRYSTA-Apex V Series Accuracy

Unit: µm

Series	Probe used	Length measurement error *1 ISO 10360-2: 2009
1200 Series	**SP25M**	$E_{0,MPE}$=2.3 + 3L/1000*2
1600 Series		$E_{0,MPE}$=3.3 + 4.5L/1000 (4.5 + 5.5L/1000)*2 *3
2000 Series		$E_{0,MPE}$=4.5 + 8L/1000*2

*1 Specifications vary by configuration, size, and thermal environment.
*2 L = Measuring length (unit: mm)
*3 ( ) indicates Z: 1600 mm specification

SMS Smart Measuring System

Status monitoring boosts uptime with timely adjustments and alerts for events like busy, idle, or maintenance. Operators can optimize machine use and repurpose idle instruments for measuring other parts.

MeasurLink® ENABLED
Data Management Software by Mitutoyo

Products equipped with the measurement data output function can be connected to the measurement data network system MeasurLink® (refer to page A-3 for details).

MRT240
Rotary table diameter 240 mm

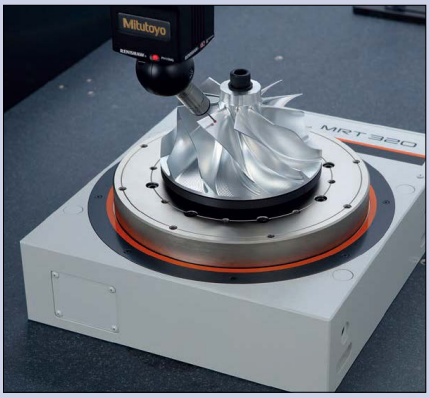

MRT320
Rotary table diameter 320 mm

Got Questions?

Status monitoring boosts uptime with timely adjustments and alerts for events like busy, idle, or maintenance. Operators can optimize machine use and repurpose idle instruments for measuring other parts.

Products equipped with the measurement data output function can be connected to the measurement data network system MeasurLink® (refer to page A-3 for details).

Coordinate Measuring Systems

Precision Measuring Technology in Three Dimensions

Standard CNC CMM SERIES 191 — CRYSTA-Apex EX Series 1200R

MeasurLink® ENABLED
Data Management Software by Mitutoyo

- **CRYSTA-Apex EX 1200R** Series products are advanced CNC CMMs equipped with the REVO-2 probe head and a choice of probes to create a range of standard 5-axis measuring machines.
- 5-axis operation reduces the time required for probe repositioning movements and allows more flexible positioning. This also facilitates access to complex workpieces and saves time both during programming and measurement.
- Allows ultra high-speed 5-axis scanning (max. 500 mm/s), far surpassing conventional 3-axis control. Support for high-speed sampling of up to 4,000 points per second allows acquisition of densely spaced measurement points, even during fast scanning.
- Internal implementation of laser sensing technology ensures high-accuracy measurement, even with long styli (up to 500 mm*).

* Distance from probe rotation center to stylus tip

CRYSTA-Apex EX 123010R

Helical scan

Gasket scan

Sweep scan

Airfoil section scan

MRS2 Tiered Racks

SPECIFICATIONS

25.4 mm = 1.0 inch

Items \ Model		CRYSTA-Apex EX 121210R	CRYSTA-Apex EX 122010R	CRYSTA-Apex EX 123010R
Measuring range	X-axis	1200 mm		
	Y-axis	1200 mm	2000 mm	3000 mm
	Z-axis	960 mm		

Note: While the appearance of the natural stone measuring table varies according to the source, the high stability for which this material is known can always be relied upon.

CRYSTA-Apex EX 1200R Series Accuracy

Unit: µm

Probe used	Length measurement error*1 ISO 10360-2: 2009
REVO + RSP2 + RSH250	$E_{0,\,MPE}$=2.9 + 4L/1000*2
REVO + RSP3-3 + RSH3-3	$E_{0,\,MPE}$=2.5 + 3L/1000*2

*1 Specifications vary by configuration, size, and thermal environment.
*2 L = Measuring length (unit: mm)

L

Mitutoyo

Coordinate Measuring Systems

Precision Measuring Technology in Three Dimensions

High Accuracy CNC CMM SERIES 355 — STRATO-Apex Series 500/700/900/1600

SMS Smart Measuring System

MeasurLink® ENABLED
Data Management Software by Mitutoyo

- The **STRATO-Apex** Series of CNC CMMs offer improved structural rigidity and guide systems to guarantee very high accuracy measurement. High drive speed and high acceleration provide lower cycle times in critical measurement applications.
- The **STRATO-Apex** Series uses the same ultra-high accuracy length measuring unit (manufactured in-house) as used in the **LEGEX** Series for position detection, allowing for extremely advanced position detection and enabling control of these ultra-high-accuracy machines. It also applies various other technologies, such as a high-speed control program, that enable high speed and accuracy.

STRATO-Apex 574

STRATO-Apex 7106

STRATO-Apex 9166

STRATO-Apex 162016

SPECIFICATIONS

25.4 mm = 1.0 inch

Items \ Model		STRATO-Apex 574	STRATO-Apex 776	STRATO-Apex 7106
Measuring range	X-axis	500 mm	700 mm	
	Y-axis	700 mm	700 mm	1000 mm
	Z-axis	400 mm	600 mm	

Items \ Model		STRATO-Apex 9106	STRATO-Apex 9166	STRATO-Apex 162012	STRATO-Apex 162016	STRATO-Apex 163012	STRATO-Apex 163016
Measuring range	X-axis	900 mm		1600 mm			
	Y-axis	1000 mm	1600 mm	2000 mm		3000 mm	
	Z-axis	600 mm		1200 mm	1600 mm	1200 mm	1600 mm

Note: While the appearance of the natural stone measuring table varies according to the source, the high stability for which this material is known, can always be relied upon.

STRATO-Apex Series Accuracy Unit: µm

Series	Probe used	Length measurement error*1 ISO 10360-2: 2009
574 Series	**SP25M**	$E_{0,MPE} = 0.7 + 2.5L/1000$*2
700/900 Series		$E_{0,MPE} = 0.9 + 2.5L/1000$*2
1600 Series		$E_{0,MPE} = 2.5 + 4.0L/1000\ (3.0 + 4.0L/1000)$*2 *3

*1 Specifications vary by configuration, size, and thermal environment.
*2 L = Measuring length (unit: mm)
*3 ( ) indicates Z: 1600 mm specification

SMS Smart Measuring System

Status monitoring boosts uptime with timely adjustments and alerts for events like busy, idle, or maintenance. Operators can optimize machine use and repurpose idle instruments for measuring other parts.

MeasurLink® ENABLED
Data Management Software by Mitutoyo

Products equipped with the measurement data output function can be connected to the measurement data network system MeasurLink® (refer to page A-3 for details).

MRT240
Rotary table diameter 240 mm

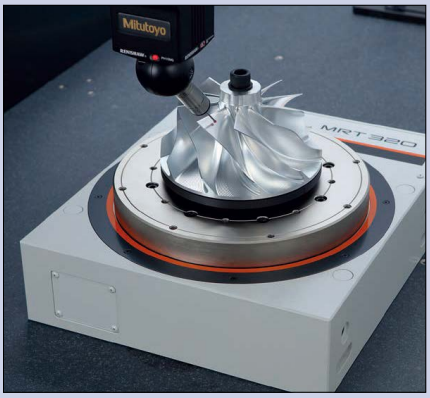

MRT320
Rotary table diameter 320 mm

Talk to Sales

L

Status monitoring boosts uptime with timely adjustments and alerts for events like busy, idle, or maintenance. Operators can optimize machine use and repurpose idle instruments for measuring other parts.

Products equipped with the measurement data output function can be connected to the measurement data network system MeasurLink® (refer to page A-3 for details).

High Accuracy CNC CMM SERIES 355 — STRATO-Active Series 700/900

- The **STRATO-Active** Series is a lineup of intermediately priced coordinate measuring machines between the CRYSTA-Apex V and STRATO-Apex with 4 models being offered: 776; 7106; 9106; 9166.
- The **STRATO-Active** includes thermal compensation as standard and has a larger guaranteed temperature range of 18~22° C (64.4~71.6° F) compared to 19~21° C (66.2~69.8° F) for the STRATO-Apex.

STRATO-Active 7106

SPECIFICATIONS

25.4 mm = 1.0 inch

Items \ Model		STRATO-Active 776	STRATO-Active 7106	STRATO-Active 9106	STRATO-Active 9166
Measuring range	X-axis	700mm		900 mm	
	Y-axis	700mm	1000mm	1000mm	1600mm
	Z-axis	600mm			

STRATO-Active Series Accuracy

Unit: µm

Series	Probe used	Length measurement error*1 ISO 10360-2: 2009
700/900 Series	**SP25M**	$E_{0,MPE}$ = 1.2 + 3L/1000*2

*1 Specifications vary by configuration, size, and thermal environment.
*2 L = Measuring length (unit: mm)

High-accuracy Separate Guide Type SERIES 355 — STRATO-Apex G Series 2000/3000/4000

- The **STRATO-Apex G** Series are CNC CMMs that use the standard Mitutoyo CMM structure for large machines which are designed to be used for measuring large and heavy workpieces with high accuracy. The picture below gives a good idea of how large the machine is. The measuring accuracy and drive speed are the world's highest in the X-axis measuring range of 2000 mm (78.7 in) and 3000 mm (118.1 in).

STRATO-Apex 3000G Series

- High-accuracy linear encoders (manufactured in-house) are built into the length measuring units used for position detection. Their excellent position detection capability is what makes the control of these high-accuracy devices possible. The series also applies a multitude of technologies regarding structure, control, component processing, assembly, and other aspects that enable large CMMs to deliver high-accuracy measurements.
- This series of CMMs is equipped with a system to automatically restore accuracy deterioration (MOVAC - Mitutoyo On-site Volumetric Accuracy Compensation system) caused by foundation deformation as a standard feature.
- Equipped with a temperature compensation system that guarantees the specified accuracy within the wide range of 18 to 22° C under certain environmental conditions, although high-accuracy CMMs should ideally be installed in a temperature-controlled room.
- Safety devices such as a Z-axis beam sensor, tape switch, and area sensor are available as options.

SPECIFICATIONS

25.4 mm = 1.0 inch

Items \ Model		STRATO-Apex 2000G Series	STRATO-Apex 3000G Series	STRATO-Apex 4000G Series
Measuring range	X-axis	2000 mm	3000 mm	4000 mm
	Y-axis	3000 mm/4000 mm/5000 mm/6000 mm		
	Z-axis	1200 mm/1600 mm/2000 mm		

Note: For information on accuracy specifications, contact your nearest M³ Solution Center.

Coordinate Measuring Systems

Precision Measuring Technology in Three Dimensions

Ultra-high Accuracy CNC CMM SERIES 356 — LEGEX TAKUMI Series 500/700/900

SMS Smart Measuring System

MeasurLink® ENABLED
Data Management Software by Mitutoyo

- The **LEGEX TAKUMI** Series is an ultra-high precision CNC CMM with the world's highest level of accuracy, made possible by rigorous analysis of all possible error-producing factors and the elimination or minimization of their effects.
- The fixed bridge structure and precision air bearings running on highly rigid guideways ensure superior motion stability and ultra-high geometrical accuracy. Thorough testing, using FEM structure analysis simulation, guarantees geometric motion accuracy with minimal errors due to fluctuations in inertial loading and other variables. In addition, other technologies have been utilized in the structure of the drive unit, minimizing vibration, etc., to provide ultra-high accuracy.
- The combination of a Mitutoyo ultra-high accuracy crystallized glass scale with a coefficient of thermal expansion of almost zero and a high resolution, high-performance reflection type linear encoder provides excellent position detection for premium performance.
- Many optional systems are available, including probes (contact and non-contact types), data processing units, and many other items to support the ultra-high accuracy measurement of a wide variety of workpieces.

LEGEX TAKUMI 9106

SPECIFICATIONS

25.4 mm = 1.0 inch

Items \ Model		LEGEX TAKUMI 574	LEGEX TAKUMI 774	LEGEX TAKUMI 776	LEGEX TAKUMI 9106
Measuring range	X-axis	500 mm	700 mm	700 mm	900 mm
	Y-axis	700 mm	700 mm	700 mm	1000 mm
	Z-axis	450 mm	450 mm	600 mm	600 mm

Note: For measuring table, the standard specification is ceramic coating. A scraping specification is also available as an option.

LEGEX Series accuracy

Unit: μm

Probe used	Length measurement error*1 ISO 10360-2: 2009
MPP-310Q	$E_{0,MPE}$=0.23 + L/1000*2

*1 Specifications vary by configuration, size, and thermal environment.
*2 L = Measuring length (unit: mm)
Note: For **LEGEX 12128**, contact your nearest M³ Solution Center.

SMS Smart Measuring System

Status monitoring boosts uptime with timely adjustments and alerts for events like busy, idle, or maintenance. Operators can optimize machine use and repurpose idle instruments for measuring other parts.

MeasurLink® ENABLED
Data Management Software by Mitutoyo

Products equipped with the measurement data output function can be connected to the measurement data network system MeasurLink® (refer to page A-3 for details).

MRT240
Rotary table diameter 240 mm

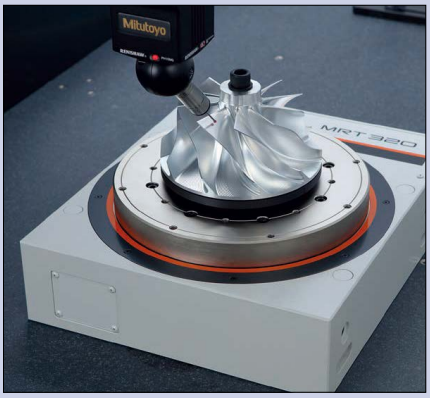

MRT320
Rotary table diameter 320 mm

Refer to the **LEGEX TAKUMI** brochure **(16034)** for more details.

L

Status monitoring boosts uptime with timely adjustments and alerts for events like busy, idle, or maintenance. Operators can optimize machine use and repurpose idle instruments for measuring other parts.

Products equipped with the measurement data output function can be connected to the measurement data network system MeasurLink® (refer to page A-3 for details).

Measurement example for dual-ram type
(Simultaneous use of touch-trigger probe and line laser probe)

Where to Buy

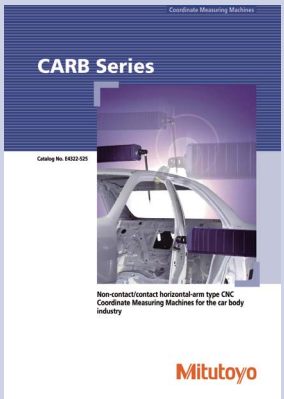

Refer to the **CARB** Series Brochure (**E16014**) for more details.

Coordinate Measuring Systems

Precision Measuring Technology in Three Dimensions

Car Body Measuring System SERIES 355 — CARBstrato Series 4000/6000/8000

MeasurLink® ENABLED
Data Management Software by Mitutoyo

- The world's largest class of CMM.
  The **CARBstrato** series is a lineup of horizontal-arm type CNC CMMs, offering the world's largest measurement range that even makes it possible to measure car bodies.
- Single-arm/Dual-arm systems.
  Single-arm/Dual-arm system types are available to suit the intended use.
  Single-arm type: Measures a workpiece using a single arm
  Dual-arm type: Measures a workpiece placed between two simultaneously controlled arms

CARBstrato 601624D (Dual-ram type)

L

Coordinate Measuring Systems

Precision Measuring Technology in Three Dimensions

In-line Type CNC CMM SERIES 360 — MACH-3A Series

SMS Smart Measuring System

MeasurLink® ENABLED
Data Management Software by Mitutoyo

- In-line type CNC CMM (Horizontal-arm type) incorporates the CMM controller and the host computer in the main unit resulting in a compact space-saving footprint for the shop floor. This series is designed for 24-hour operation with high stability and remarkable durability. In addition, its accuracy is guaranteed within the temperature range 5 to 40° C.

SPECIFICATIONS

25.4 mm = 1.0 inch

Items \ Model		MACH-3A 653
Measuring range	X-axis	600 mm
	Y-axis	500 mm
	Z-axis	280 mm
Accuracy*1	19 to 21 °C	$E_{0,MPE} = 2.5 + 3.5L/1000\,\mu m$*2

*1 Specifications vary by configuration, size, and thermal environment.
*2 L = Measuring length (unit: mm)
Note: For information about guaranteed accuracy within a temperature range other than 19 to 21 °C, contact your local Mitutoyo sales office.

MACH-3A 653
The indexing table shown is optional

SMS Smart Measuring System

Status monitoring boosts uptime with timely adjustments and alerts for events like busy, idle, or maintenance. Operators can optimize machine use and repurpose idle instruments for measuring other parts.

MeasurLink® ENABLED
Data Management Software by Mitutoyo

Products equipped with the measurement data output function can be connected to the measurement data network system MeasurLink® (refer to page A-3 for details).

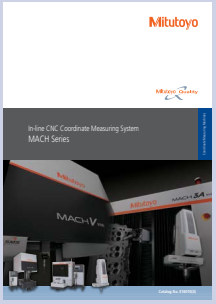

Refer to the **MACH** Series Brochure (**E16010**) for more details.

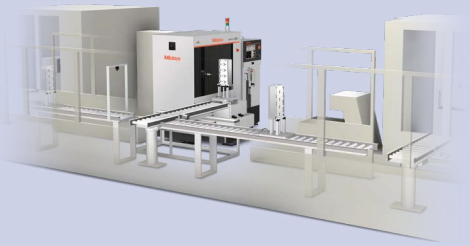

In-line Type CNC CMM SERIES 360 — MACH-V9106

SMS Smart Measuring System

MeasurLink® ENABLED
Data Management Software by Mitutoyo

- Makes building a flexible measuring system to replace gage measurements on power train production lines possible. It also allows for high throughput thanks to high acceleration and high drive speed. In addition, its accuracy is guaranteed within the temperature range 5 to 35° C.

SPECIFICATIONS

25.4 mm = 1.0 inch

Items \ Model		MACH-V9106
Measuring range	X-axis	900 mm
	Y-axis	1000 mm
	Z-axis	600 mm
Accuracy*1	19 to 21 °C	$E_{0,MPE} = 2.2 + 3.5L/1000\,\mu m$*2

*1 Specifications vary by configuration, size, and thermal environment.
*2 L = Measuring length (unit: mm)
Note: For information about guaranteed accuracy within a temperature range other than 19 to 21° C, contact your nearest M³ Solution Center.

MACH-V9106

SMS Smart Measuring System

An online system to monitor the operational and mechanical statuses of measuring machines. This allows you to grasp the state of a process flow from the operational status of measuring machines within a production process.

MeasurLink® ENABLED
Data Management Software by Mitutoyo

Products equipped with the measurement data output function can be connected to the measurement data network system MeasurLink® (refer to page A-3 for details).

MRT240
Rotary table diameter 240 mm

Refer to the **MACH** Series Brochure (**E16010**) for more details.

L

Status monitoring boosts uptime with timely adjustments and alerts for events like busy, idle, or maintenance. Operators can optimize machine use and repurpose idle instruments for measuring other parts.

Products equipped with the measurement data output function can be connected to the measurement data network system MeasurLink® (refer to page A-3 for details).

Refer to the **MACH** Series Brochure (**E16010**) for more details.

Get a Quote

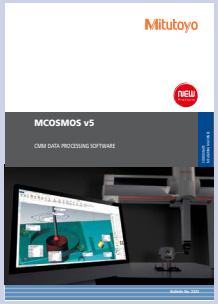

Refer to the **MCOSMOS** Software Brochure (**Bulletin No. 2322**) for more details.

Coordinate Measuring Systems

Precision Measuring Technology in Three Dimensions

CMM Equipped with High-accuracy/ High-speed/Flexible CNC Measuring Head SERIES 355 — Mach Ko-ga-me

MeasurLink® ENABLED
Data Management Software by Mitutoyo

- Can be used in standalone applications or integrated into work cells.
- If required, the system can measure workpiece features that exceed the **Ko-ga-me**'s X-stroke by mounting the workpiece, or the **Ko-ga-me**, on an auxiliary X-axis.
- Ideal for inspection of large or small workpieces and offers a wide choice of measuring probes including touch-trigger and scanning types. (Note: Probe choice may be restricted, depending on the application.)

KGM12128-C

Standalone system

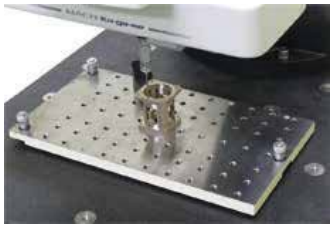

Stand, measuring table, etc. are options.

SPECIFICATIONS

25.4 mm = 1.0 inch

Items \ Model		KGM12128-C
Measuring range	X-axis	120 mm
	Y-axis	120 mm
	Z-axis	80 mm
Accuracy*1	19 to 21 °C	$E_{0,MPE}$=2.4 + 5.7L/1000 μm*2

*1 Specifications vary by configuration, size, and thermal environment.
*2 L = Measuring length (unit: mm)
Note: For information about guaranteed accuracy within a temperature range other than 19 to 21° C, contact your nearest M³ Solution Center.

Probes for MACH Ko-ga-me

Touch trigger PH6/TP200

Scanning PH6M/SP25M

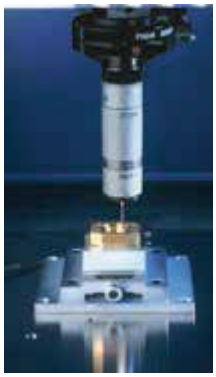

L

Coordinate Measuring Systems

Precision Measuring Technology in Three Dimensions

MiCAT
Mitutoyo Intelligent Computer Aided Technology
the standard in world metrology software
cmm

Software for Manual/CNC Coordinate Measuring Machines MCOSMOS

MCOSMOS software modules

	GEOPAK	CAT1000P	CAT1000S	SCANPAK
MCOSMOS-1	✓			
MCOSMOS-2	✓	✓	✓	
MCOSMOS-3	✓	✓	✓	✓

- MCOSMOS is the powerful and flexible metrology information system for the vast range of state-of-the-art Mitutoyo CMMs. Supported by an extensive lineup of optional software applications giving users complete control over a comprehensive range of sensors ready for every application.

GEOPAK [General purpose measurement program]

This universal geometrical measuring software delivers high-performance multidimensional measurements. With the ability to control your workpiece from design to completion, its various functions make GEOPAK one of the most powerful programs available.

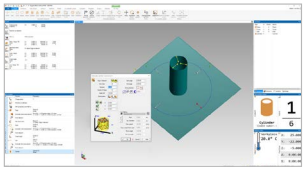

CAT1000P [Online/Offline progamming module]

CAT1000P (Prismatic), users create measurement programs from the CAD model using the seven basic geometric elements: point, line, plane, circle, sphere, cylinder, and cone. With automatic probe changes, probe path generation, and collision avoidance to generate a concise, efficient, and optimized measurement program. CAT1000P's 3D graphical display of the CMM, probe, and part provides a clear representation of the measured geometrical elements in 3D for part program simulation.

CAT1000S [Curved surface evaluation program]

This software is used for free-form surface evaluation and online/offline teaching.The measurement results are then displayed in easily interpreted graphics with sections color-coded based on non-conformances.

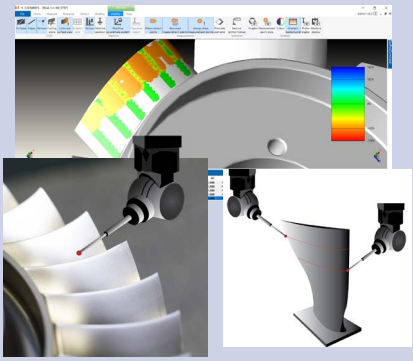

SCANPAK [Profile measurement program]

Quantitatively determine workpiece profiles and reflect this in the production process directly for optimizing workpieces immediately by using SCANPAK.

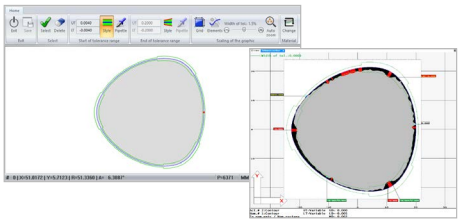

FORMTRACEPAK-AP [Analysis program]

This program is used for minutely analyzing two-dimensional curved lines captured by **SCANPAK**.

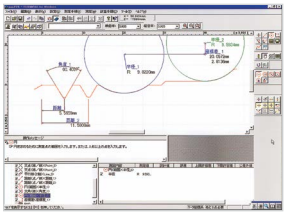

SURFPAK-SP [Analysis program]

This is a software program used for the **SURFTEST** roughness probe for a CMM. With this program, surface roughness analysis conforming to standards such as ISO, JIS, ANSI, and VDA are available. Cooperation with **MCOSMOS** enables fully automatic dimensional measurement and surface roughness measurement.

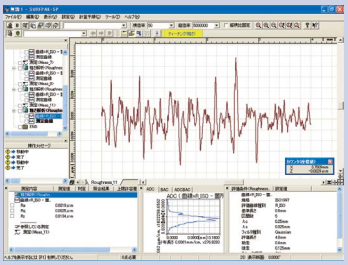

ROUNDPAK-CMM

The functionality of analysis software as used for roundness measuring machines is now available on **MCOSMOS**. As well as roundness and cylindricity evaluation, various filters are also available.

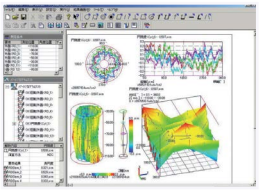

GEARPAK-Express Cylindrical
[Gear evaluation program]

Gears with involute tooth shape can be measured with GEARPAK-Express. By inputting the gear parameters, the measurement program is generated automatically. GEARPAK-Express then evaluates the parameters and deviations for profile and flank line, pitch, tooth thickness, space width, dimension over one or two balls, base tangent length, radial runout, single and dual flank working test.

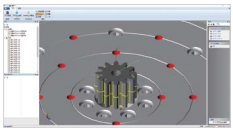

[Result drawing]

GEARPAK-Worm [Gear evaluation program]

GEARPAK-Worm for MCOSMOS measures cylindrical worms with flank types ZI, ZA, ZN, and ZK. After input of the Worm gear parameters, the measurement program is generated automatically.

GEARPAK-Bevel/Hypoid
[Gear production support/evaluation program]

GEARPAK Bevel is currently supporting the measurement and evaluation of:
- Straight-Bevel Gear manufactured by Gleason Works Co.(Ring Gear/Pinion)
- Spiral-Bevel Gear manufactured by Gleason Works Co.(Ring Gear/Pinion)

GEARPAK Hypoid is currently supporting the measurement and evaluation of:
- Hypoid Gear generated by Gleason Works Co.(Ring Gear [Formate, Helix-form]/Pinion)

By inputting the gear parameters, the measurement program is generated automatically.

[Result drawing]

MAFIS Express
[Blade measurement/Evaluation program]

This software program enables creation of measurement programs and measurement and analysis of blades and blisks. A part program for measurement can be automatically created just by selecting required contents and evaluation conditions. The measurement results will be displayed in a report including 2D graphics.

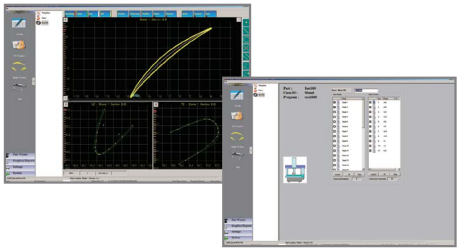

Refer to the **MCOSMOS** Software Brochure (**Bulletin No. 2322**) for more details.

L

MiCAT
Mitutoyo Intelligent Computer Aided Technology
the standard in world metrology software
cmm

Coordinate Measuring Systems

Precision Measuring Technology in Three Dimensions

Automatic Measurement Program Generation Software MiCAT Planner

One-click programming that changes the relationship between people and precision measurement

- Automatically reads 3D CAD models with PMI to generate complete measurement programs in a single step—reducing programming time from hours to minutes. For models without PMI, a fast tolerance assistant enables rapid program creation.
- Optimizes measurement paths to minimize probe movements and tool changes —shortening cycle time and increasing CMM throughput.
- Rule-based programming standardizes measurement strategy, reducing variation between programmers while lowering reliance on specialized programming resources.

Tolerance information add function

Lets you add tolerances in the software for 3D CAD models without tolerance information. Automatically create optimal measuring programs based on the user added tolerance specifications.

Supported languages

Available in 16 languages

CAD data with tolerances

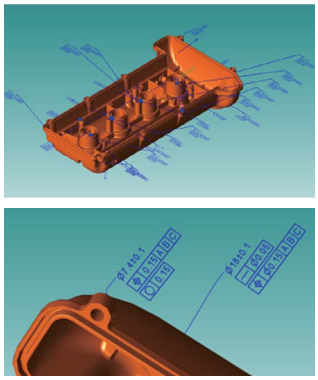

CMM System configuration

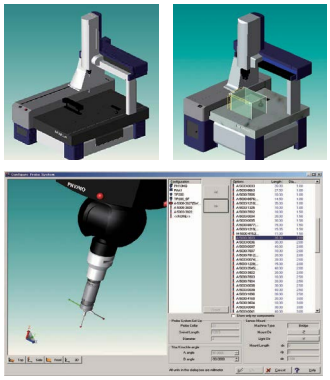

User-defined measurement rules

(number of locations to measure with tolerance information and sampling method, etc.,)

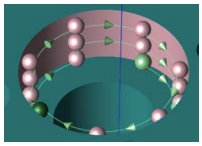

Example of sampling method: contact measurement

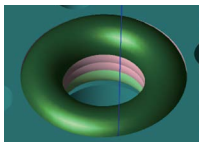

Example of sampling method: scanning measurement

Instantly and automatically creates a measurement program

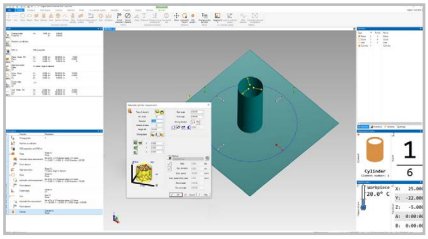

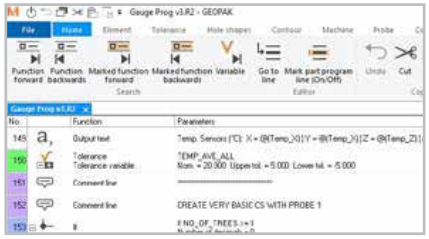

An optimized measurement program for MCOSMOS

Case study

Compare the measurement part-programming time for a test piece.

1: Programming in 2D drawing: **approx. 45 to 60 minutes**
2: Programming using 2D drawing + 3D CAD: **approx. 15 to 20 minutes**
3: Create with **MiCAT Planner** (using 3D CAD model + PMI): **approx. 3 minutes!**

Note: The measurement rules are defined in advance.

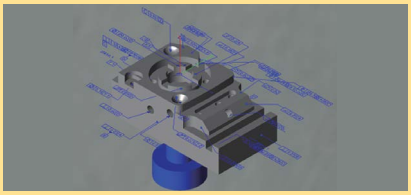

Part-programming time
Reduced by up to 95%!!

Guarantee a **dramatically reduced development phase** and improve product quality at the same time.

Need Support?

Refer to the **MiCAT Planner** Brochure (**Bulletin 2221(2)**) for more details.

L

Mitutoyo

Coordinate Measuring Systems

Precision Measuring Technology in Three Dimensions

MPP-002 Scanning Probe System

High-Speed Analog Scanning with Exceptional Durability Measure Anything. Measure Anywhere.

The MPP-002 Scanning Probe System is a Mitutoyo next-generation analog scanning probe designed for precision coordinate measuring machines. Combining proprietary sensing technology with a rugged mechanical design, MPP-002 delivers outstanding scanning performance, reliable touch-trigger operation, and exceptional durability for demanding inspection environments.
Designed to support everything from routine dimensional inspection to complex freeform surface analysis, MPP-002 provides stable measurement performance across a wide range of stylus configurations while reducing maintenance requirements and maximizing system uptime.

- **Proprietary 3D-AOS Sensor Technology**
  Mitutoyo's innovative Three-Dimensional Angle Optical Sensor (3D-AOS) directly measures stylus deflection in three axes, providing highly stable analog scanning performance with excellent repeatability.
- **Exceptional Mechanical Durability**
  The unique mechanical sensing design greatly reduces wear of critical components, helping extend service life while maintaining consistent measurement performance over years of operation.

Proprietary 3D-AOS Sensor Technology

Mitutoyo's proprietary **3D-AOS sensor technology** continuously measures stylus deflection in the X, Y, and Z directions during scanning. Dedicated XY-direction and dual Z-direction leaf spring structures provide controlled stylus movement while maintaining exceptional measurement stability. The result is high-speed analog scanning with outstanding accuracy and repeatability.

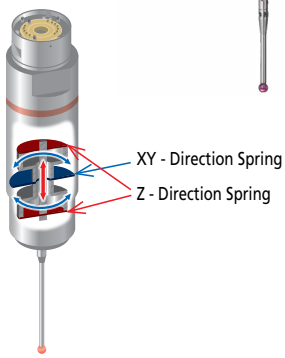

Probe System Benefits

Scanning Measurement
Continuous measurement provides thousands of data points while moving across the workpiece, reducing inspection time while improving feature characterization.

Touch Trigger Measurement
MPP-002 also supports single-point probing operations, allowing one probe system to perform both scanning and discrete point measurements.

Reliable Operation
Designed for long-term stability in demanding manufacturing environments.
Features include:

- Stable measurement performance
- Reduced maintenance
- High reliability
- Consistent repeatability

	Description	Part Number	Qty
MPP-002-01 Set 02AQG701	MPP-002-1 Main Unit	**02AQG703**	1
	MPP-002-1 Stylus Module	**NA**	2
	MPP-002-1 Storage Box	**02AQG708A**	1
	MS3-4R46/φ4 Ruby Ball Stylus(L=50)	**06ABN830**	1
	M2- Stylus Tool	**153140**	1
	Auto-joint Wrench	**02AQG795**	1
	Instruction Manual CD for MPP-002	**02AQG875**	1
02AQG790	MPP-002-1 Stylus Module (Individual Set)		1
MPP-002-02 Set 02AQG801	MPP-002-1 Main Unit	**02AQG803**	1
	MPP-002-2 Stylus Module	**NA**	1
	MPP-002-2 Storage Box	**02AQG708B**	1
	MS3-4R46/φ4 Ruby Ball Stylus(L=50)	**06ABN830**	1
	M2- Stylus Tool	**153140**	1
	Auto-joint Wrench	**02AQG795**	1
	Instruction Manual CD for MPP-002	**02AQG875**	1
02AQG890	MPP-002-2 Stylus Module (Individual Set)		1

- Design-based scanning for rapid scans using pre-defined data, and autonomous scanning for instant shape capture.
- NonStopScanning feature minimizes measurement time by automatically skipping empty spaces like holes and grooves for continuous, uninterrupted scanning.

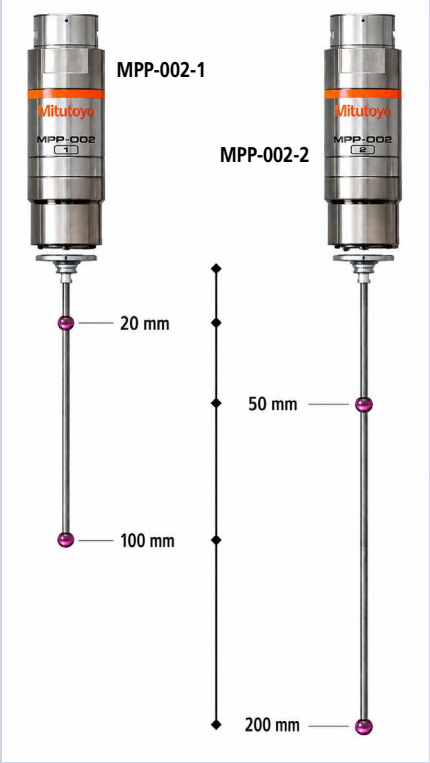

MPP-002 offers two models for flexible stylus use: MPP-002-1 supports 20 mm to 100 mm styli for standard high-accuracy scanning, while MPP-002-2 supports 50 mm to 200 mm styli for extended reach into deep bores, recesse features, and other difficult geometries. Both support offsets up to 80 mm for measuring around obstructions with stable analog scanning performance.

Coordinate Measuring Systems

Precision Measuring Technology in Three Dimensions

The MTP-002 is well suited for:
- General dimensional inspection
- Production CMM inspection
- Long stylus applications
- Automated inspection cells
- Multi-probe CMM systems
- ights-out manufacturing
- Aerospace components
- Automotive components
- Medical devices
- Precision machined parts

The MTP-002 and MPP-002 Probe Systems support automatic probe and stylus changing for seamless transitions between tactile and scanning measurements. By automatically selecting the optimum probe or stylus configuration, complex inspection routines can be completed without operator intervention, improving productivity and reducing setup time.

Automatic changing of probes, stylus lengths, and specialized configurations enables continuous measurement of diverse part geometries. Combined with Mitutoyo CMM software, the system maximizes machine utilization and supports unattended, lights-out inspection.

MTP-002 Tactile Probe System

High Stability Tactile Measurement for Demanding Production Environments

The MTP-002 is Mitutoyo's next-generation tactile probe system designed to deliver outstanding accuracy, repeatability, and stability for demanding CMM inspection applications. Utilizing a newly developed strain gauge sensing design, the MTP-002 provides reliable measurement performance with long styli, changing temperatures, and high-speed CMM motion while maintaining exceptional repeatability. Designed for automated inspection and general-purpose dimensional measurement, the MTP-002 helps improve measurement reliability by reducing false trigger events caused by machine acceleration and environmental influences, making it an ideal solution for both production and quality laboratory environments.

- High-accuracy touch trigger measurement
- Stable performance with long stylus configurations
- Excellent repeatability for production inspection
- Reduced false trigger events during high-speed CMM movement
- Improved thermal stability from 20°C to 50°C
- Compatible with automatic probe changing systems
- Designed for unattended automated measurement
- Robust construction for long-term reliability

Customer Benefits

Reliable Long Stylus Performance
Maintains excellent measurement repeatability with longer stylus configurations where conventional touch trigger probes may experience increased measurement variation.

Improved Thermal Stability
Maintains stable measurement performance over a wide operating temperature range of 20°C to 50°C with approximately three times less thermal drift than conventional TP200-class probes.

High-Speed Motion Stability
Designed to minimize erroneous trigger events caused by rapid machine acceleration and deceleration, allowing higher machine utilization and improved inspection throughput.

Excellent Repeatability
Provides TP200-equivalent or improved probing accuracy and repeatability across multiple stylus lengths for dependable production measurement.

Automated Measurement Ready
Compatible with automatic probe changing systems for fully automated inspection without operator intervention.

Set No.		Description	Part Number	Qty
MTP-002 set 02AQL601	MTP-002 02AQL602	MTP-002 Main Unit	NA	1
		MTP-002 SF Module	NA	2
		Dedicated wrench	02AQL658	1
		MTP-002 Storage Box	02AQL650	1
	MS2-4R10/φ4Ruby Ball Stylus (L=10)		06ABN774	1
	M2- Stylus Tool		153140	1
	Instruction Manual CD for MPT-002		02AQL675	1
OPTION	MTP M8 adapter set		02AQL660	1
	MTP-002 SF module (Individual set)		02AQL680	1
	MTP-002 LF module (Individual set)		02AQL690	1

Coordinate Measuring Systems

Precision Measuring Technology in Three Dimensions

Scanning Probes

SP25M

Compact high accuracy type scanning probe

This compact, multi-functional and highly accurate scanning probe is only 25 mm in diameter, which enables it to access shrouded workpiece features. Data is collected by scanning measurement, ultra-high precision point measurement and center alignment point measurement. The probe can be attached to a probe head (**PH10M**/**10MQ**) to automatically change the orientation allowing for maximum flexibility in measurement. Reference SP25M scanning probe on L-18.

MPP-310Q

Ultra-high accuracy and low measuring force scanning probe

This ultra-high precision scanning probe incorporates built-in XYZ scales for highest-accuracy performance. The compact size of this probe is ideal for low measuring force and high speed scanning. Data collection can be performed by scanning measurement, ultra-high precision point measurement and center alignment measurement.

REVO-2

High speed 5-axis scanning head

This high-speed scanning head delivers high accuracy measurement while delivering high-throughput. Measurement with stylus up to 500 mm in length increases flexibility and makes simultaneous 5-axis measuring without probe head indexing.

SP80

High accuracy scanning probe (supporting long styli)

A highly accurate stylus up to 500 mm in length (both horizontally and vertically) can be installed on this probe. This ultra-high precision scanning probe allows data collection by scanning measurement, ultra-high precision point measurement and center alignment point measurement.

Non-contact Probes

SurfaceMeasure

Non-contact type laser probe

This compact, high accuracy, non-contact type laser probe is designed for use with CNC CMMs. The scanning probe automatically adjusts to workpiece surface characteristics to deliver highly efficient measurements. Automatic laser intensity and camera sensitivity adjust according to the environment and the workpiece material for simpler and more comfortable laser scanning. (Refer to page L-17 for more information on SurfaceMeasure probes)

SurfaceMeasure 1110

SurfaceMeasure 201FS

QVP

QUICK VISION probe

This CNC CMM Quick Vision Probe utilizes Mitutoyo vision measuring machine technology for totally automated video measurement.

Roughness measurement Probe

SURFTEST

Probe for surface roughness measurement

Mounting this probe on a CMM enables surface roughness measurement and analysis to be included in fully automatic CNC measurement cycles. This probe is compatible with an automatic probe changer and therefore can be automatically replaced with another type of probe for 3D coordinate measurement. A wide variety of roughness analyses can be performed using the dedicated evaluation program.

Touch-trigger Probes

TP20

Compact touch-trigger probe

This compact touch-trigger probe is only 13.2 mm in diameter, making it an ideal choice for probing deep inside narrow or shrouded workpiece features. Styli auto-changing (optional) is supported when mounted on a CNC CMM.

TP200

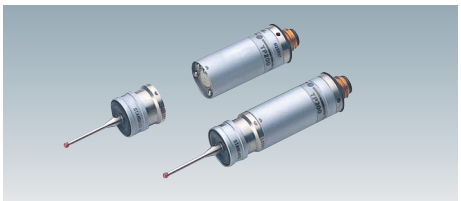

Compact high-accuracy touch-trigger probe

This compact, high accuracy touch-trigger probe is only 13.5 mm in diameter, making it an ideal choice where high-accuracy measurement inside narrow or shrouded workpiece features is needed. Styli auto-changing (optional) is supported.

TP7M

High accuracy touch-trigger probe

This high-accuracy touch-trigger probe has an excellent repeatability figure of of $2\sigma \leq 0.25$ µm. A long stylus, up to 150 mm in length, can be installed.

SMS Smart Measuring System

Status monitoring boosts uptime with timely adjustments and alerts for events like busy, idle, or maintenance. Operators can optimize machine use and repurpose idle instruments for measuring other parts.

MeasurLink® ENABLED
Data Management Software by Mitutoyo

Products equipped with the measurement data output function can be connected to the measurement data network system MeasurLink® (refer to page A-3 for details).

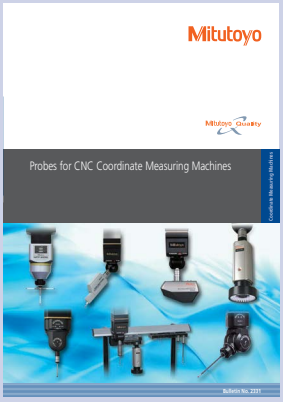

Refer to the Probes for **CNC Coordinate Measuring Machines Brochure** (**Bulletin 2133**) for more details.

L

Status monitoring boosts uptime with timely adjustments and alerts for events like busy, idle, or maintenance. Operators can optimize machine use and repurpose idle instruments for measuring other parts.

Products equipped with the measurement data output function can be connected to the measurement data network system MeasurLink® (refer to page A-3 for details).

Coordinate Measuring Systems

Precision Measuring Technology in Three Dimensions

PH20

5-axis control touch-trigger system

Thanks to unique "head touches", it is possible to measure by movement of the probe head itself instead of moving the CMM elements. Also, measuring time can be significantly shortened by means of 5-axis concurrent movement and stepless positioning angle.

Probe heads

PH10M/10MQ

Motorized probe heads

These heads allow automatic control of positioning (up to 720 directions) of the mounted probe. It is possible to mount not only a touch-trigger probe but also any scanning probe, vision probe, laser probe, screw-thread depth probe, etc.
Auto-changing is available (optional).

▲Mounting example of touch-trigger probe

PH6M

Fixed probe head

A fixed probe head with autojoint connector for use with **TP7**, **SP25M**, and **QVP**.

SP25M Scanning Probe

The SP25M combines two sensors in a single housing. Users can switch between a choice of five scanning modules (which can carry M3 styli with lengths from 20 mm to 400 mm) and the TM25-20 adapter module that is compatible with Renishaw's TP20 range of probe modules. This capability enables scanning and touch-trigger probing in a single probe system.

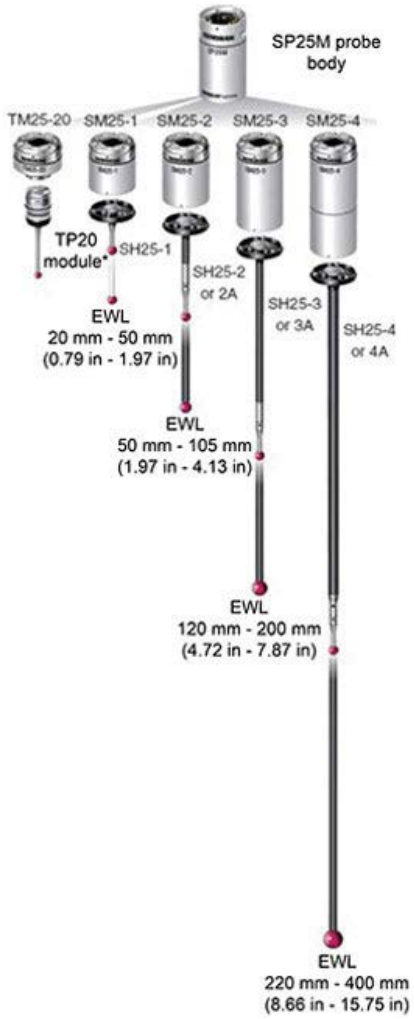

SP25M modules and stylus holders

The SP25M's compact size and auto-joint mounting makes it compatible with the PH10M PLUS / PH10MQ PLUS and PH6M probe heads. It can also be mounted on a multi-wired probe extension bar. Together, these combinations permit excellent reach and access to part features.

A range of module kits allows SP25M users to build up their probing capability over time.

Each SM25-# scanning module is optimized in terms of gain and spring rate to suit the range of stylus lengths specified. For every module, there is a matching SH25-# stylus holder.

The SH25-3 and SH25-4 stylus holders are constructed with a fixed carbon fiber stem to which an M3 stylus is mounted, selected to provide the correct working length.

While the SP25M can carry cranked (non straight) styli configurations when using SM25-1 / 2 / 3 / 4 / 5 scanning modules and the original standard stylus holders (SH25-1 / 2 / 3 / 4 / 5), for optimum metrology where larger offsets are required Renishaw recommends the SH25-2A / 3A / 4A range of stylus holder, specifically designed to meet the challenges posed by such stylus arrangements.

Need Service?

L

Coordinate Measuring Systems

Precision Measuring Technology in Three Dimensions

MiCAT
Mitutoyo Intelligent Computer Aided Technology
the standard in world metrology software
cmm

Non-contact Type Laser Probe SurfaceMeasure

- **Ultra-high speed data collection:**
  The **SurfaceMeasure** probe works by emitting a laser line onto the workpiece with ultra-high speed measuring to acquire 300,000 surface points/second.*
  * When using **SurfaceMeasure 1110**
- **Advantages of non-contact type:**
  Non-contact measurement enables measurement of materials that may be easily deformed by contact measurement, including plastics or thin, elastic parts.
- **Powder-less measurement:**
  Automatic configuration of the camera sensitivity and the laser intensity settings according to the environment and materials enable establishing an easy and trouble-free laser-scanning environment without the need for 3D scanning sprays.
- **Evaluation cases:**
  The measure point cloud data can be used by various optional software in a wide range of applications, such as editing, plane creation, comparison using CAD data and more.

- The flying spot type is capable of scanning difficult parts, such as this impeller, precisely and achieves highest scanning accuracy in the class (in the case of **SurfaceMeasure 201FS**).

Measurement of color sample plate

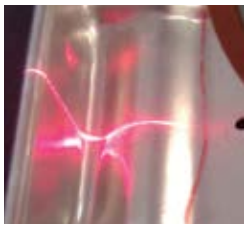

Measurement of glossy parts

1110

201FS

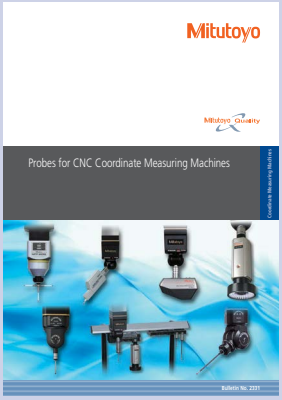

Refer to the Probes for **CNC Coordinate Measuring Machines Brochure** (**Bulletin 2133**) for more details.

Refer to the **SurfaceMeasure** Brochure (**E16000-US**) for more details.

SPECIFICATIONS

25.4 mm = 1.0 inch

		SurfaceMeasure 1110	SurfaceMeasure 201FS
Laser irradiation method		Line Laser	Flying spot
Max. scan width		110 mm	23 mm
Max. scan depth		100 mm	15 mm
Working distance		156.5 mm	57.5 mm
Scanning error*		9 µm	1.8 µm
Max. acquisition rate		300,000 points/sec	25,000 points/sec
Mass		440 g	500 g
Laser Class	EN/IEC	Class2 [EN/IEC 60825-1 (2014)]	
	Laser Type	Red-light semiconductor	Semiconductor
Line Laser	Wave length	660 nm	670 nm
	Power output	2.5 mW	1 mW

* According to Mitutoyo's acceptance procedure. (1σ/sphere measurement, probe alone.)

Measuring range

Unit: mm

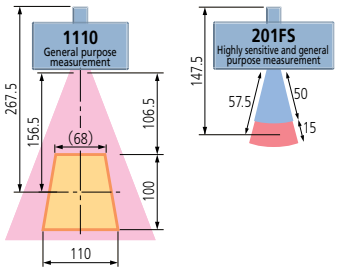

L

MiCAT
Mitutoyo Intelligent Computer Aided Technology
the standard in world metrology software
cmm

Coordinate Measuring Systems

Precision Measuring Technology in Three Dimensions

Point Cloud Processing Software for Coordinate Measuring Machines MSURF

- **MSURF** is a software program that enables users to perform operations from measurement to evaluation on the same platform when the non-contact line laser probe, **SurfaceMeasure**, is used. Eight software modules are provided according to the task.

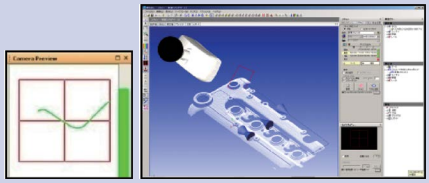

Note: I**ACR3** change rack enables automatic change of probes during CNC program execution thereby reducing measurement cycle time.

Find Training

MSURF-S

Calculates point cloud data measured by CNC CMM with **SurfaceMeasure**. It generates scanning paths by defining the scanning start position, length, and width.

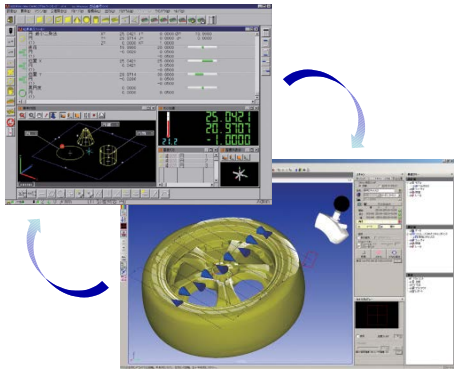

MSURF-I

Conducts analysis or comparison verification of measured point cloud data in reference to nominal data (supporting CAD data import).

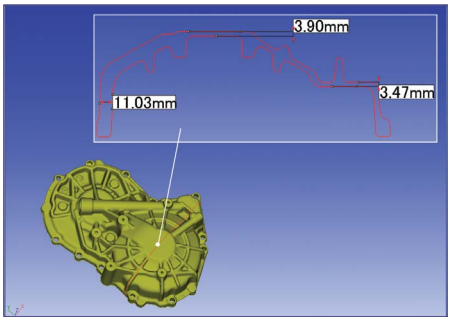

Section evaluation (dimensional calculation)

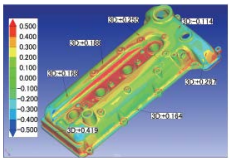

Error color-coded map

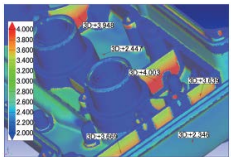

Thickness color-coded map

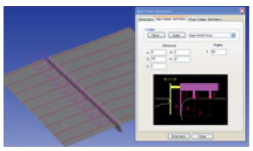

Evaluation of step/clearance

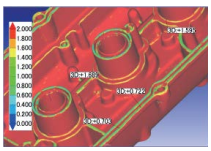

Surface curvature evaluation

MSURF-G

MSURF-G is the off-line version of **MSURF-S**. It allows users to create measurement programs in advance of actual measurements on a CMM by using CAD data. Therefore, users can start measurement immediately at the time a real workpiece is ready. Since **MSURF-S** is a standalone PC application, only requiring installation by the user, it helps preserve valuable CMM time exclusively for productive measurement.

Note: **MSURF-G** cannot be combined with **MSURF-S**.

MSURF-MESH PRO

This software is provided with various functions such as filtering point cloud data and mesh data. The software is enhanced by adding functions to standard ones. It also enables functions such as mesh data thinning-out, highlighting, interpolation and outlier removal that are unavailable as standard.

Note: **MSURF-MESH PRO** has the optional functions of **MSURF-I**.

MSURF-PLANNER

MSURF-PLANNER is software to automatically create measurement macros (surface form, feature form) for the line laser probe from 3D CAD data.

Optimized data (travel path, number of probe head revolutions, etc.) of a measurement path will contribute to improvements in productivity.

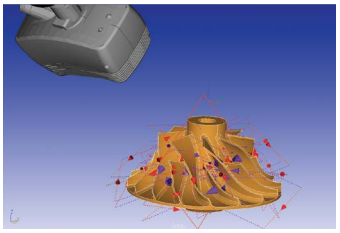

Automatic generation of measurement macros by **MSURF-PLANNER**

L

Mitutoyo

Coordinate Measuring Systems

Precision Measuring Technology in Three Dimensions

Mitutoyo ECO-FIX Fixture Systems

The Mitutoyo Eco-Fix modular fixture systems for CMM, Form, and Vision products, the work-holding setups work well for different part sizes/types and environments. The design combines operational modularity advances with lower-cost solutions. This can be found both in the reduction or elimination of hard fixturing costs and setup time. This system is comprised of well-marked, color-coded components designed to simplify part measurement requirements. Magnetic or threaded fastening points deliver fast, plug-and-play connectivity. First-time fixturing jobs can be established and reconfigured in a matter of minutes for quick turnaround for future part measurement. Or, as needed, fixtures can be built and stored to meet all common part measurement requirements. Base plates are hard-coated and other components are machined for durability.

- A workpiece can be mounted on a CMM's measuring table using combinations of Eco-Fix clamping components. Dedicated fixturing is no longer required.
- Individual starter kits are available, "Eco-fix Kit S" and "Eco-fix Kit L" as shown on the next page.
- The Eco-Fix Pallet Receiver System (PRS) is available with either "Eco-Fix Pallet Receiver Kit S" or "Eco-Fix Pallet Receiver Kit L" (shown below), eliminating the time consuming positioning of the workpiece.

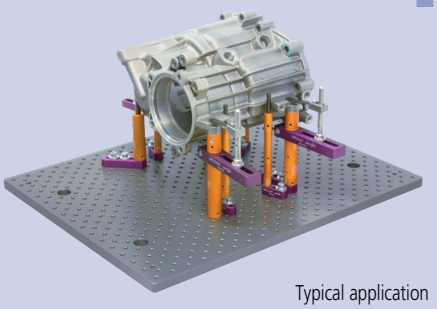

Typical application

ECO-FIX Pallet Receiver Kits

The sophisticated Mitutoyo manual Pallet Receiver System (PRS) significantly speeds up measuring on coordinate measuring machines as well as on form and vision measuring systems. Workpieces can be exchanged rapidly with the new system. The pallet system comprises the tried and tested Mitutoyo Eco-Fix system, a base plate with two handles and three semi-spheres on the bottom. The latter help users to quickly and precisely position the pallet on the receiver plate prisms fixed to the measuring machine in just one step. This way, fine adjusting of the position is a thing of the past.

Eco-Fix Pallet Receiver Kit L - K5512219
(Includes K551049, K551217, & K551216)

Part No.: K551344
Rack for six pallets, for the loading receiver pallet system

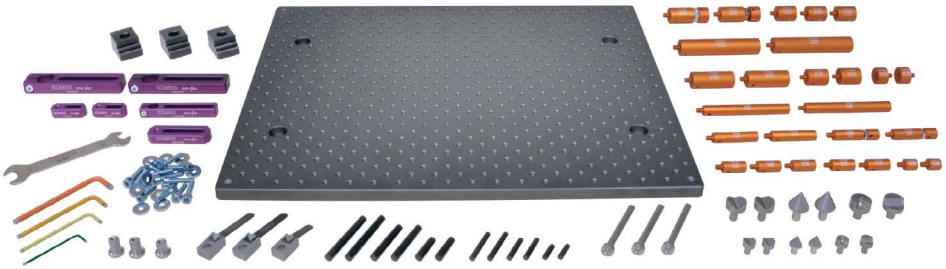

Eco-fix Kit L K551049

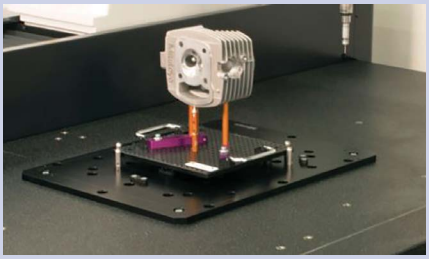

Receiver plate set (optional)

Receiver Plate K551217

Handle Kit K551216

Schedule Service

Coordinate Measuring Systems

Precision Measuring Technology in Three Dimensions

Locating Pins 1 - K551123

Locating Pins 2 - K551124

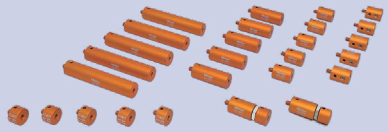

Clamping Elements 1 - K551125

Supporting Elements 1 - K551126

Supporting Elements 2 - K551127

Straight Pins - K551128

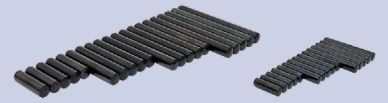

Receiver Brackets 1 - K551129

Receiver Brackets 2 - K551130

Magnet 1 - K551131

Joints 1 - K551132

ECO-FIX Fixture Kits

The entry-level Mitutoyo Eco-Fix Kit S version is comprised of a 250mm x 250mm base plate footprint and 59 total components in the system. The Eco-Fix Kit L is a larger version and built for more complex part fixturing applications (measuring 500mm x 400mm in base plate footprint and a total of 98 total components in the system).

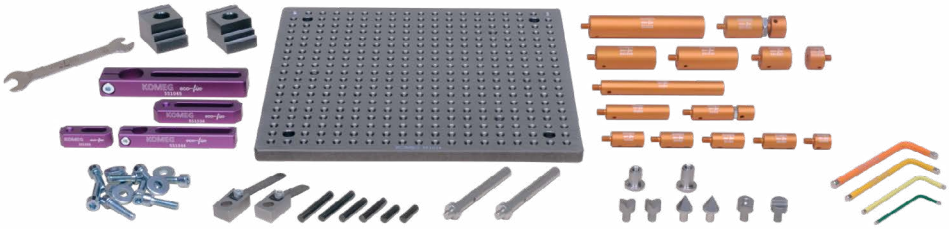

Eco-Fix Kit - S K551048

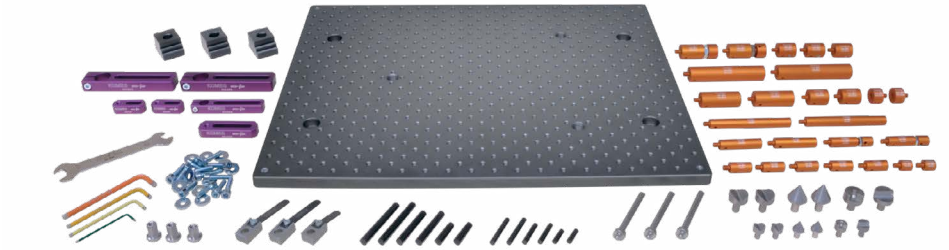

Eco-Fix Kit L - K551049

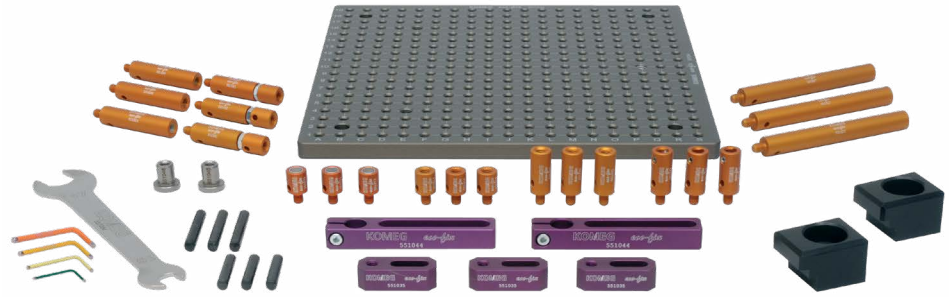

Eco-Fix MAG S - K551089

Eco-Fix MAG L - K551090

L

Coordinate Measuring Machines

Probing Accessories

Mitutoyo Styli Kits

M2

STARTER - K651376

BASIC 1 - K651377

BASIC 2 - K651354

PROFESSIONAL - K651379

Styli Kit M2/M3 - K651445

M3

STARTER - K651380

Carbon Fiber 1 - K651318

BASIC 1 - K651381

Carbon Fiber 2 - K651319

Carbon Fiber 3 - K651320

Materials used for spherical probes

Ruby

As the hardest of all probe element materials, ruby is the perfect all-round material. Spherical probes made of ruby have been used for most standard applications. The low specific density of ruby enables the mass of the stylus tip to be kept as small as possible. This effectively allows the elimination of false triggers caused by mass inertia when the CMM moves.

Zirconium oxide

Because of the specific surface properties of balls made of zirconium oxide - a ceramic compound – it is ideally suited for aggressive scanning of abrasive surfaces, such as workpieces made of cast iron. Zirconium oxide has virtually the same hardness and wear-resistant properties as ruby.

Silicon nitride

Silicon nitride is extremely hard and wear-resistant with the lowest surface roughness of all ball materials. Specific advantage: Silicon nitride is resistant to absorbing aluminum from workpiece surfaces.

Find a Distributor

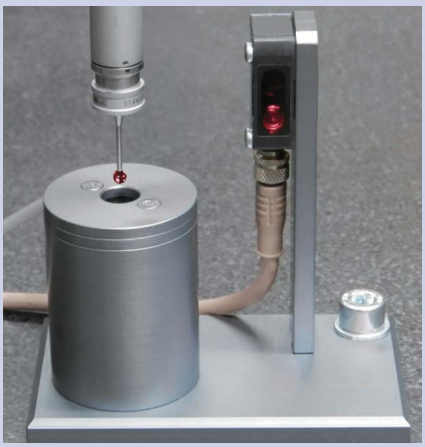

Diamond Styli

Solid diamond and diamond-coated balls offer significant advantage over other styli tip materials. Whether it is because the application demands extreme wear resistance or extreme long lasting is the requirement, diamond is a perfect choice.

Straight Shaft Stylus

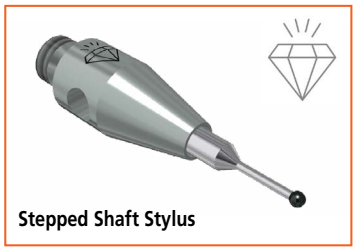

Stepped Shaft Stylus

General specification:

- The ball and stem connection is done by using hard soldering in a protective atmosphere.
- Stem material: carbide
- Styli lengths up to 50mm are currently supported.
- All styli specified with ruby balls and tungsten carbide stems can be replicated with diamond coated balls. (M2, M3, M4 and M5)

Specification: Solid diamonds

- Available ball diameters are: ø0.3mm, ø0.6mm, ø0.8mm, ø1.0mm, ø2.0mm, ø3.0mm
- Sphericity deviation Grade 10 <250 nm

Specification: Diamond coated balls

- The diamond coating is applied on a silicon nitride ball.
- The black color is still visible through the translucent diamond coat.
- 0.05mm are added to the diameter of the nitride ball.
- Available ball diameters are: ø1.05mm, ø2.05mm, ø3.05mm, ø5.05mm, ø8.02mm
- Sphericity deviation Grade 10 <250 nm
- Sphericity deviation Grade 5 <130 nm for ø1.05mm, ø2.05mm, ø3.05mm, ø5.05mm on request

StyliCleaner

The integrated solution for automatic stylus tip cleaning improves reliability of measurement results and reduce machine downtime caused by manual cleaning and human error.

Risk at manual styli cleaning

- Contaminations on the styli elements lead to significant deviations in the measurement results.
- Cleaning the stylus elements is time consuming and requires a high level of expertise.
- Human error can lead to damage and misplacement of the stylus.
- This leads to downtimes in which measurements cannot be made.

Solution

- Human error is avoided.
- Planning of automatic cleaning cycles to remove dust, oil or chips from spherical stylus elements.
- The cleaning cycle can be coupled to the calibration cycle, for example.
- The cleaning program can also be initiated by less qualified personnel using a bar or QR code.

Cleaning process

The stylus tip element is cleaned with cleaning agent for 10 seconds and then dried for 10 seconds residue-free with compressed air.

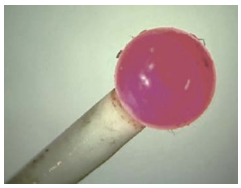

Contaminated stylus tip

Cleaned stylus tip

Performance Assessment Method of Coordinate Measuring Machines

Regarding the performance assessment method of CMM, a revision of ISO 10360 Series was issued in 2003 and was partially revised in 2009.
The following describes the standard inspection method including the revised content.

Table 1 ISO 10360 Series

	Item	ISO Standard No.	Year of issue
1	Terms	ISO 10360-1	2000
2	Length measurement	ISO 10360-2	2009
3	Rotary table equipped CMM	ISO 10360-3	2000
4	Scanning measurement	ISO 10360-4	2000
5	Single/Multi-styli measurement	ISO 10360-5	2010
6	Software inspection	ISO 10360-6	2001

Maximum Permissible Length Measurement Error $E_{0,MPE}$ [ISO 10360-2: 2009]

Using the standard CMM with specified probe, measure 5 different calibrated lengths 3 times each in 7 directions within the measuring volume (as indicated in Figure 1), making a total of 105 measurements. If these measurement results, including the allowance for the uncertainty of measurement, are equal to or less than the values specified by the manufacturer, then it proves that the performance of the CMM meets its specification.
The result of OK/NG is required to be judged considering the uncertainties.
The maximum permissible error (standard value) of the test may be expressed in any of the following three forms (unit: μm).

$E_{0,MPE}$ $(MPE_E) = A + L/K \leq B$
$E_{0,MPE}$ $(MPE_E) = A + L/K$
$E_{0,MPE}$ $(MPE_E) = B$

A: Constant (μm) specified by the manufacturer
K: Dimensionless constant specified by the manufacturer
L: Measured length (mm)
B: Upper limit value (μm) specified by the manufacturer

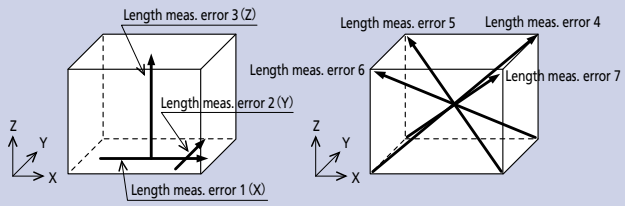

Figure 1 Measauring directions to obtain length measurement error

Note: ISO 10360-2: 2009 requires measurement in 4 different directions and recommends measurement parallel to each axis, while ISO 10360-2: 2001 specified the measurement "in 7 arbitrary directions."

The following error definitions were added in ISO 10360-2: 2009.

Maximum Permissible Length Measurement Error/ Length Measurement Error when stylus offset is 150 mm $E_{150,MPE}$ [ISO 10360-2: 2009]

In addition to length measurement in 7 directions, ISO 10360-2: 2009 specifies measuring in 2 lines over the diagonal YZ or XZ plane with probe offset as shown in Figure 2. Note: The stylus offset is set at 150 mm as default.

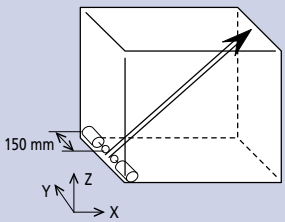

Figure 2 Length measurement error when Z-axis stylus offset is 150 mm

Maximum Permissible Limit of the Repeatability Range of Length Measurement $R_{0,MPL}$ [ISO 10360-2: 2009]

Calculate the maximum value from the results of three repeated measurements.

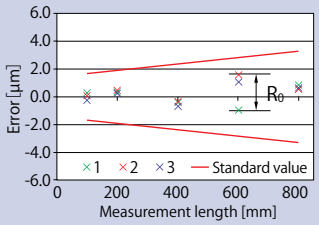

Figure 3 Repeating range of length measurement

Maximum Permissible Radial Four-Axis Error MPE_{FR}, Maximum Permissible Tangential Four-Axis Error MPE_{FT}, and Maximum Permissible Axial Four-Axis Error MPE_{FA} [ISO 10360-3: 2000]

The test procedure under this standard is to place two standard spheres on the rotary table as shown in Figure 4. Rotate the rotary table to a total of 15 positions including 0°, 7 positions in the plus (+) direction, and 7 positions in the minus (-) direction and measure the center coordinates of the two spheres in each position. Then, add the uncertainty of the standard sphere shape to each variation (range) of radial direction elements, connecting direction elements, and rotational axis direction elements of the two standard sphere center coordinates. If these calculated values are less than the specified values, the evaluation test is passed.

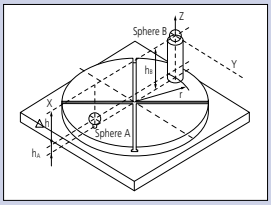

Figure 4 Evaluation of a CMM with a rotary table

Maximum Permissible Scanning Probing Error MPE_{THP} [ISO 10360-4: 2000]

This is the accuracy standard for a CMM if equipped with a scanning probe. The test procedure under this standard is to perform a scanning measurement in 4 planes on the standard sphere and then, for the least squares sphere center calculated using all the measurement points, calculate the radial range (dimension 'A' in Figure 5) within which all measurement points exist. Based on the least squares sphere center calculated above, calculate the radial distance between the calibrated standard sphere radius and the maximum measurement point and the minimum measurement point, and take the larger distance (dimension 'B' in Figure 5). Add an extended uncertainty that combines the uncertainty of the stylus tip shape and the uncertainty of the standard test sphere shape to each A and B dimension. If both calculated values are less than the specified values, this scanning probe test is passed.

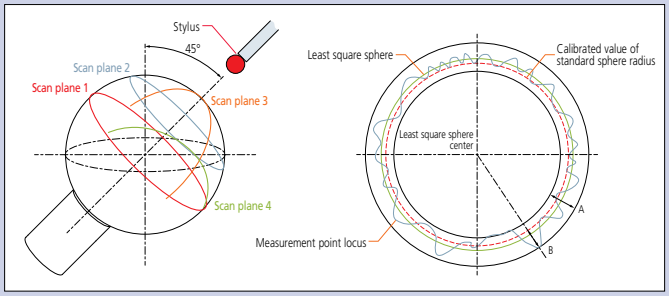

Figure 5 Target measurement planes for the maximum permissible scanning probing error and its evaluation concept

Maximum Permissible Single Stylus Form Error $P_{FTU, MPE}$ [ISO 10360-5: 2010]

This measurement was included in the dimensional measurement in ISO 10360-2: 2001. However, it is specified as "CMMs using single and multiple stylus contacting probing systems" in ISO 10360-5: 2010.
The measurement procedure has not been changed, and the following procedure should be performed.
Measure the defined target points on a standard sphere (25 points, as in Figure 6) and use all the results to calculate the center position of the sphere by the least squares method.
Then, calculate the radial distance from the center position of the sphere by the least squares method for each of the 25 measurement points and obtain the radial difference Rmax - Rmin. If this difference, to which a compound uncertainty of forms of the stylus tip and the standard test sphere are added, is equal to or less than the specified value, it can be judged that the probe has passed the test.

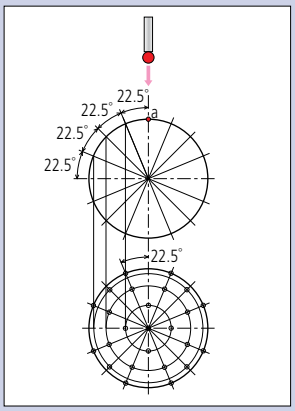

Figure 6 Target points of measurement for Single Stylus Form Error

Measurement Uncertainty of the CMM

Measurement uncertainty is an indication used for evaluating reliability of measurement results.
In ISO 14253-1: 1998, it is proposed to consider the uncertainty when evaluating the measurement result in reference to the specification.
However, it is not easy to estimate the uncertainty of the measurement performed by a CMM.
To estimate the uncertainty of the measurement, it is necessary to quantify each source of uncertainty and determine how it propagates to the measurement result. The CMM is subject to all types of settings that determine how the measurement should be performed, such as measurement point distribution, or datum definition, according to the drawing instruction or operator's intention. This fact makes it harder to detect the sources of uncertainty influencing the result. Taking circle measurement as an example, just a difference of one measurement point and its distribution causes the necessity of recalculation of the uncertainty.
Also, there are many sources of uncertainty to be considered with the CMM and their interactions are complex.
Because of the above, it is almost impossible to generalize on how to estimate measurement uncertainty of the CMM.

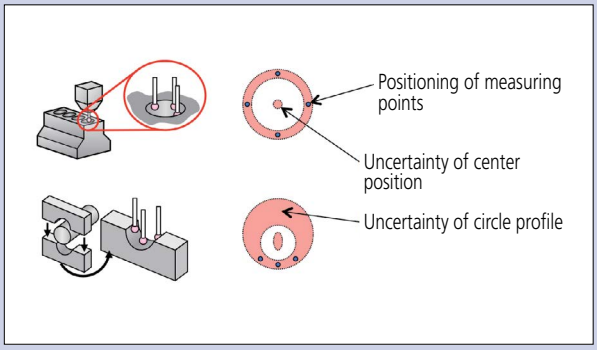

Example of circle measurement by CMM

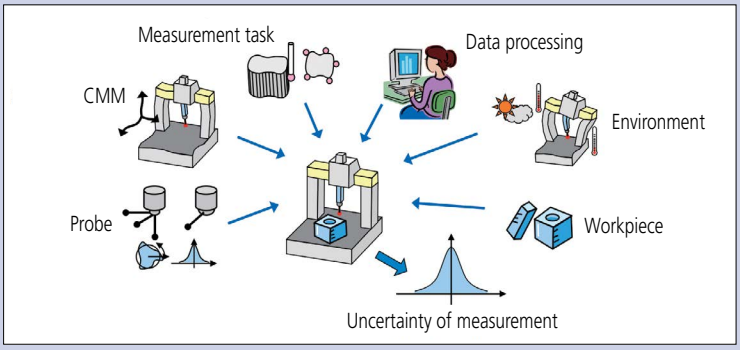

Major contributions that cause uncertainty in CMM measurement results

Featured Products

CNC Vision Measuring Machine

Quick Vision Active

Refer to page M-3 for details.

Smart Vision System

QM-Fit

Refer to page M-13 for details.

Manual Vision Measuring System

QUICK SCOPE

Refer to page M-15 for details.

Large FOV Vision Measuring Machine

Quick Image with M3

Refer to page M-14 for details.

M

Vision Measuring Systems

INDEX

QUICK VISION Series

QV Active	M-3
QV APEX Pro/QV HYPER Pro	M-4
QV ACCEL	M-5
ULTRA QV	M-6
Hyper QVWLI	M-6
QV TP Active/QV TP Pro	M-7
QV Hybrid Type 4 (CPS)	M-8
QV Hybrid Type 1 (LiH)	M-8

Micro Form Measuring System

UMAP Vision System	M-9

Data Processing Software

QVPAK	M-10
Application software	M-11

Defect Detection

DDPak	M-12
AI Inspect	M-12

QM-Fit Series

QM-Fit	M-13

QUICK IMAGE Series

Quick Image	M-14

QUICK SCOPE Series

QS-L/AFC	M-15

SMS Smart Measuring System

Smart Measuring System

An online system to monitor the operational and mechanical statuses of measuring machines. This allows you to grasp the state of a process flow from the operational statuses of measuring machines within a production process.

MeasurLink® ENABLED
Data Management Software by Mitutoyo

Measurement Data Network System

MeasurLink® is a measurement data management system based on databases (SQL Server). You can build a network to manage the measurement results and measuring machines by simply combining the functions necessary for your purpose.

MeasurLink® is a registered trademark of Mitutoyo Corporation in Japan and Mitutoyo America Corporation in the United States.

Mitutoyo guarantees the product quality
PROPRIETARY INSPECTION CERTIFICATE
Mitutoyo guarantees the product quality

Measuring Instruments Shipped with Inspection Certificate

Mitutoyo guarantees product quality as a leading precision measuring instrument manufacturer and ships measuring instruments with an inspection certificate that includes inspection data so that customers can use them with confidence.

MiCAT
Mitutoyo Intelligent Computer Aided Technology
the standard in world metrology software
VISION

Mitutoyo

Vision Measuring Systems

QV Active
SERIES 363 — CNC Vision Measuring System

- Cost effective, multifunction, CNC Vision Measuring System.
- Usability has been improved through a color camera and 8-step zoom optics.
- The zoom ratio of 7X (14X at maximum by changing the fixed-magnification objective lens) enables a wide range of inspection from wide view measurement at low magnification to micro-measurement at high magnification.
- The 74 mm maximum working distance (1X optional objective) promotes safe working by reducing the risk of collision, and allows greater freedom in fixture design.

QV Active 404

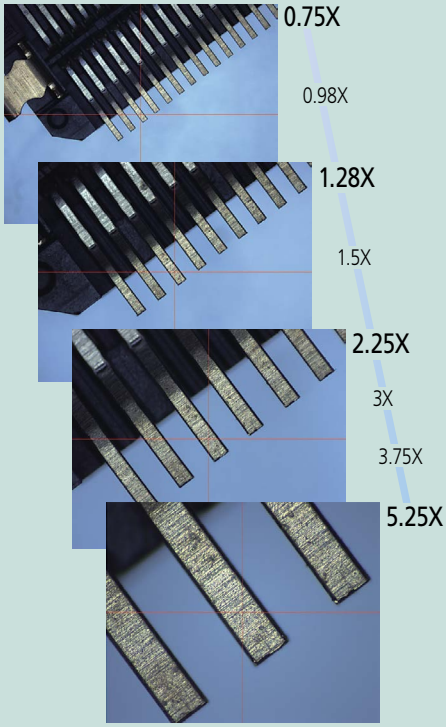

From wide view measurement to micro-measurement

Optical magnification		0.5X	0.65X	0.75X	0.85X	0.98X	1X	1.28X	1.3X	1.5X	1.7X	2X	2.25X	2.5X	3X	3.5X	3.75X	4X	5X	5.25X	7X
View field (mm)	Horizontal (H)	13.60	10.46	9.07	8.00	6.94	6.80	5.31	5.23	4.53	4.00	3.40	3.02	2.72	2.27	1.94	1.81	1.70	1.36	1.30	0.97
	Vertical (V)	10.80	8.31	7.20	6.35	5.51	5.40	4.22	4.15	3.60	3.18	2.70	2.40	2.16	1.80	1.54	1.44	1.35	1.08	1.03	0.77
Total magnification (on the monitor)		13.20	17.10	19.80	22.40	25.80	26.40	33.70	34.30	39.50	44.80	52.70	59.30	65.90	79.10	92.30	98.90	105.50	131.80	138.40	184.50
Objective lens	1X objective (optional) Working distance	74 mm																			
	1.5X objective (standard accessory) Working distance	42 mm																			
	2X objective (optional) Working distance	42 mm																			

Note: The total magnification indicates the magnification on the monitor when the size of the **QVPAK** video window is 178.8×143.0 mm (default).

SPECIFICATIONS

Model No.		QV Active 202	QV Active 404
Type		Standard model	Standard model
Measuring range (X×Y×Z)		250×200×150 mm 10"x8"x6"	400×400×200 mm 16"x16"x8"
Observation unit		Zoom unit (8 positions)	
Imaging device		Color CMOS camera	
Vision measuring accuracy*	E_{1X}, E_{1Y}	(2 + 3L/1000) µm	
	E_{1Z}	(3 + 5L/1000) µm	
	E_2	(2.5 + 4L/1000) µm	
	Accuracy guaranteed with optics specified	Objective: 1.5X, Optical magnification: 5.25X	
Accuracy guaranteed temperature		20±1 °C	20±1 °C

* Inspected to a Mitutoyo standard. L=length between two arbitrary points (mm)

Find a Distributor

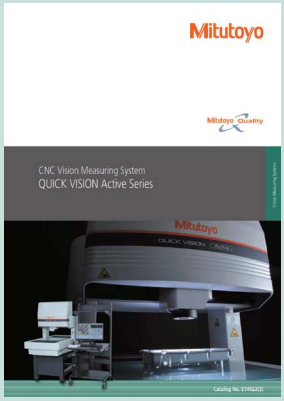

Refer to the **QUICK VISION Active** Series Brochure (**2206**) for more details.

M

Vision Measuring Systems

QV APEX Pro/QV HYPER Pro
SERIES 363 — CNC Vision Measuring System

- Equipped with a strobe light and StrobeSnap, **QUICK VISION Pro** models deliver high-speed, high-accuracy measurements.
- The STREAM function is an optional upgrade to improve productivity by up to five times.

QV APEX 404 Pro

QV HYPER 302 Pro

Tracking Auto Focus (TAF)

Laser transmitted through the objective lens allows automatic focusing.
The system automatically keeps the object in focus based on its shape, eliminating the task of focus adjustment and increasing measurement throughput.

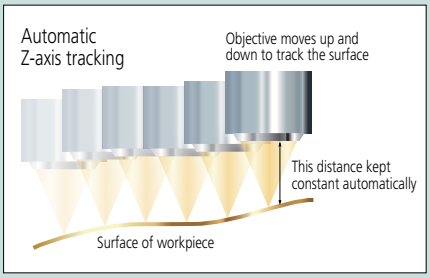

Laser source	Semiconductor laser (peak wavelength: 690 nm)
Laser safety	Class 2 (JIS C6802: 2014, EN/IEC 60825-1: 2014)
Auto focus system	Objective co-axial autofocusing (knife-edge method)

StrobeSnap

All the **QUICK VISION Pro** models are equipped with a strobe light and "StrobeSnap" which delivers measurements with both high throughput and high accuracy. Regardless of the spacing of measuring positions, measuring time can be shortened by about 35 to 45% for most measurement samples.

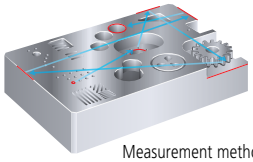
Measurement method

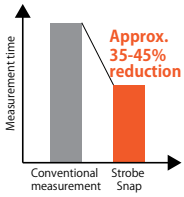

Note: Comparison with old specifications using our demo sample

STREAM function (optional)

The STREAM function provides an amazingly high throughput due to the non-stop measurement where the camera motion and the strobe light are synchronized. It can shorten measuring time more than StrobeSnap on account of continuous element measurement as shown in the following conceptual image of measurement.

XY=0.2 mm pitch, 626
Measured with a field of view of 0.62×0.47 mm
STREAM measurement 36 sec.

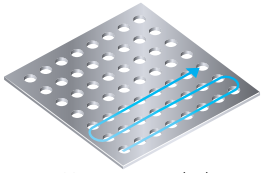
Measurement method

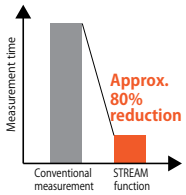

Note: Comparison with old specifications using our demo sample

SPECIFICATIONS

QV APEX Pro

Items / Model No.		QV APEX 302 Pro	QV APEX 404 Pro	QV APEX 606 Pro
Measuring range (X×Y×Z)		300×200×200 mm 12"x8"x8"	400×400×250 mm 16"x16"x10"	600×650×250 mm 24"x26"x10"
Observation unit		Programmable power turret 1X-2X-6X		
Imaging device		B&W CMOS		
Vision measuring accuracy*	$E_{UX}/E_{UY, MPE}$	(1.5 + 3L/1000) µm		
	$E_{UXY, MPE}$	(2.0 + 4L/1000) µm		
	$E_{UZ, MPE}$	(1.5 + 4L/1000) µm		

QV HYPER Pro (Specifications other than as quoted in the table are the same as the QV APEX Pro specifications.)

Items / Model No.		QV HYPER 302 Pro	QV HYPER 404 Pro	QV HYPER 606 Pro
Imaging device		B&W CMOS		
Vision measuring accuracy*	$E_{UX}/E_{UY, MPE}$	(0.8 + 2L/1000) µm		
	$E_{UXY, MPE}$	(1.4 + 3L/1000) µm		
	$E_{UZ, MPE}$	(1.5 + 2L/1000) µm		

* L=length between two arbitrary points (mm)

Refer to the **QUICK VISION** Series Brochure (**2316**) for more details.

M

Vision Measuring Systems

QV ACCEL
SERIES 363 — Large CNC Vision Measuring System

- This is a vision measuring machine with moving-bridge type main unit structure suitable for measuring large, thin workpieces.
- **QV ACCEL 1212** (range: 1250×1250×100 mm) and **QV ACCEL 1517** (range: 1500×1750×100 mm) are available to special order.
- As the stage is fixed, you can use simple fixturing or even no fixturing to fix a workpiece.

QV ACCEL 808

SPECIFICATIONS

Items \ Model No.			QV ACCEL 808	QV ACCEL 1010
Measuring range (X×Y×Z)			800×800×150 mm 32″x32″x6″	1000×1000×150 mm 39″x39″x6″
Observation unit			Programmable power turret 1X-2X-6X	
Imaging device			B&W CCD (1/2 in)	
Vision measuring accuracy*	E_{1X}, E_{1Y}		(1.5 + 3L/1000) µm	
	E_{1Z}		(1.5 + 4L/1000) µm	
	E_{2XY}		(2.5 + 4L/1000) µm	
Repeatability*	Short dimension	X, Y-axis	$3\sigma \leq 0.2$ µm	
	Long dimension		$3\sigma \leq 0.7$ µm	
Tracking auto focus device			Optional	

* Inspected to a Mitutoyo standard. L=length between two arbitrary points (mm)

Got Questions?

Refer to the **QUICK VISION** Series Brochure (**2316**) for more details.

M

Vision Measuring Systems

MeasurLink® ENABLED
Data Management Software by Mitutoyo

ULTRA QV
SERIES 363 — Ultra-High Accuracy CNC Vision Measuring System

ULTRA QV 404

- Ultra-high accuracy CNC vision measuring machine with a measuring accuracy of 0.35 µm.
- Our proprietary high-resolution (Resolution: 0.01 µm) and high-accuracy low-expansion glass scales are used on the X, Y and Z axes.
- The main unit utilizes a highly rigid moving Y-axis table with a fixed bridge. The base is made of high-stability granite.
- This model is standard-equipped with an automatic temperature compensation function that uses a temperature sensor on the main unit of the measuring machine and a temperature sensor for the workpiece.

SPECIFICATIONS

Items / Model No.		ULTRA QV 404
Measuring range (X×Y×Z)		400×400×200 mm 16"x16"x8"
Observation unit		Programmable power turret 1X-2X-6X
Imaging device		B&W CMOS camera
Vision measuring accuracy *1	E_{UX} / $E_{UY, MPE}$	(0.35 + 1.3L/1000) µm
	$E_{UXUY, MPE}$	(0.5 + 2L/1000) µm
	E_{UZ}	(1.5 + 2L/1000) µm
Tracking auto focus device		Optional

*1 Inspected to a Mitutoyo standard. L=length between two arbitrary points (mm)
*2 Verified at shipment from factory.

MeasurLink® ENABLED
Data Management Software by Mitutoyo

Hyper QVWLI
SERIES 363 — Non-contact 3D Measuring System

Hyper QVWLI 606

- **Hyper QVWLI** is a high-accuracy dual 3D measurement system consisting of **QV** and a white light interferometer.
- You can perform 3D surface texture analysis from 3D data captured by the WLI optical system. You can also perform dimension measurement and cross-section measurement at a specific height using the 3D data.

SPECIFICATIONS

Items / Model No.			Hyper QVWLI 302	Hyper QVWLI 404	Hyper QVWLI 606
Measuring range (X×Y×Z)	Vision measuring area		300×200×190 mm 12"x8"x7.5"	400×400×240 mm 16"x16"x9.5"	600×650×220 mm 24"x26"x8.5"
WLI optical head unit					
View field (H×V)			5X lens: approx. 0.64×0.48 mm/10X lens: approx. 0.32×0.24 mm/ 25X lens: approx. 0.13×0.10 mm/50X lens: approx. 0.064×0.048 mm		
Z repeatability			$2\sigma \leq 0.08$ µm		
Vision optical head unit					
Observation unit			Programmable power turret 1X-2X-6X		
Imaging device			B&W CCD (1/2 in)		
Vision measuring accuracy *2	Vision	$E_{UX}/E_{UY, MPE}$	(0.8 + 2L/1000) µm		
		$E_{UXUY, MPE}$	(1.4 + 3L/1000) µm		
		$E_{UZ, MPE}$	(1.5 + 2L/1000) µm		
	Stream (optional)	E_{1X}, E_{1Y}	(1.5 + 3L/1000) µm		
		E_{2X}	(2.0 + 4L/1000) µm		

*1 Movable range of **WLI** optical head.
*2 Inspected to a Mitutoyo standard. L=length between two arbitrary points (mm)

Refer to the **QUICK VISION** Series Brochure (**2316**) for more details.

M

Mitutoyo

Vision Measuring Systems

QV TP Active/QV TP Pro
SERIES 364 — CNC Vision Measuring System Equipped with a Touch Trigger Probe

Non-contact and contact measurement on one machine

- **QV** touch-trigger probe unit enables both vision measurement and touch-trigger probe measurement.

3D workpiece measurement

- Enables 3D measurement of workpieces, such as press-molded products, plastic-molded products, and machined products, that, until now, could not be measured with image processing alone.

Module change rack available

- Using the module change rack enables switching between vision measurement and touch probe measurement during an automatic measuring sequence.

QV TP HYPER 404 Pro

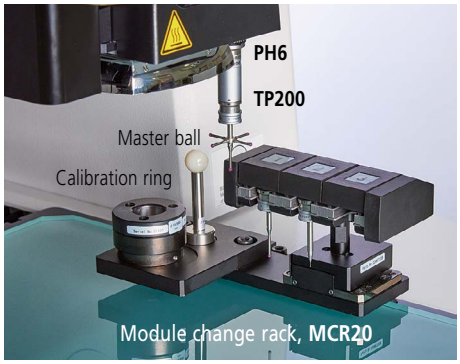

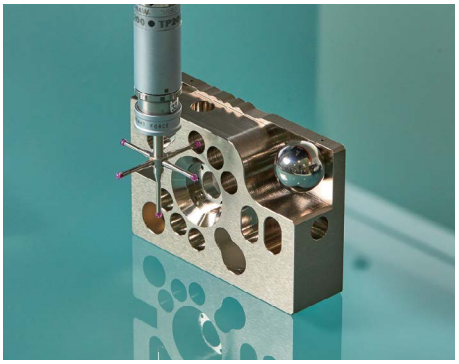

Refer to the **QUICK VISION** Series Brochure (**2316**) for more details.

SPECIFICATIONS WITH TOUCH-TRIGGER PROBE OPTIONS MOUNTED

Items / Model No.		QV TP Active 202	QV TP Active 404
Measuring range*1 (XxYxZ)	Vision	250×200×150 mm 10″x8″x6″	400×400×200 mm 16″x16″x8″
	Common to Touch-trigger Probe	184×200×150 mm 7.25″x8″x6″	334×400×200 mm 13″x16″x8″
Measuring accuracy*2 (Touch-trigger probe)	E_{1X}, E_{1Y}, E_{1Z}	(2.4 + 3L / 1000) µm	(2.4 + 3L / 1000) µm

Items / Model No.		QV TP APEX 302 Pro	QV TP APEX 404 Pro	QV TP APEX 606 Pro	QV TP HYPER 302 Pro	QV TP HYPER 404 Pro	QV TP HYPER 606 Pro
Measuring range*1 (XxYxZ)	Vision	300×200×200 mm 12″x8″x8″	400×400×250 mm 16″x16″x10″	600×650×250 mm 24″x26″x10″	300×200×200 mm 12″x8″x8″	400×400×250 mm 16″x16″x10″	600×650×250 mm 24″x26″x10″
	Common to Touch-trigger Probe	234×200×200 mm 9″x8″x8″	334×400×250 mm 13″x16″x10″	534×650×250 mm 21″x26″x10″	234×200×200 mm 9″x8″x8″	334×400×250 mm 13″x16″x10″	534×650×250 mm 31″x26″x10″
Measuring accuracy*2 (Touch-trigger probe)	$E_{X,\ MPE}$/$E_{Y,\ MPE}$/ $E_{Z,\ MPE}$	(1.8 + 3L / 1000) µm			(1.7 + 3L / 1000) µm		

*1 When a module change rack, a master ball, and a calibration ring are mounted, the measurement ranges are smaller than those in the table. Other specifications are the same as those for **QV Active**, **QV APEX Pro**, and **QV HYPER Pro**. Please contact your nearest M³ Solution Center for more details.

*2 L=length between two arbitrary points (mm)

Talk to Sales

Vision Measuring Systems

QV HYBRID TYPE4
SERIES 365 — CNC Vision Measuring System Equipped with CPS Non-contact Displacement Sensor

Example of 3D form comparison

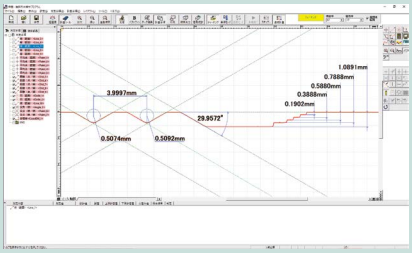

- This dual system with a non-contact displacement sensor for scanning that enables measurement of minute height differences and 3D shapes.
- The non-contact displacement sensor (CPS probe) uses the wavelength confocal method.
- The LED used as the light source of the displacement sensor has an auto-brightness control function that enables seamless measurement of materials with different reflectivity.

QVH4 HYPER 606 Pro

Features: QVH4 Pro

- Enables detection of high inclination angles for both mirror and diffused surfaces.
- The automatic lighting adjustment function allows for high accuracy measurements.
- Surface roughness or thickness measurement of thin and transparent objects such as film.

COMMON SPECIFICATIONS

Items	Model No.	QVH4 APEX 302 Pro	QVH4 APEX 404 Pro	QVH4 APEX 606 Pro	QVH4 HYPER 302 Pro	QVH4 HYPER 404 Pro	QVH4 HYPER 606 Pro
Measuring range (X×Y×Z)	Vision	300×200×200 mm 12"x8"x8"	400×400×250 mm 16"x16"x10"	600×650×250 mm 24"x26"x10"	300×200×200 mm 12"x8"x8"	400×400×250 mm 16"x16"x10"	600×650×250 mm 24"x26"x10"
Vision measuring accuracy*1	$E_{UX}/E_{UY,\ MPE}$	(1.5 + 3L/1000) µm			(0.8 + 2L/1000) µm		
	$E_{UXY,\ MPE}$	(2.0 + 4L/1000) µm			(1.4 + 3L/1000) µm		
	$E_{UZ,\ MPE}$	(1.5 + 4L/1000) µm			(1.5 + 2L/1000) µm		
Displacement sensor measuring accuracy*1*2	E_{1Z}	(1.5 + 4L/1000) µm			(1.5 + 2L/1000) µm		

*1 L=length between two arbitrary points (mm) *2 Inspected to a Mitutoyo standard.

MeasurLink® ENABLED
Data Management Software by Mitutoyo

CLASS 1 LASER PRODUCT

Safety precautions regarding QV HYBRID TYPE1

This product uses a low-power invisible laser (780 nm) for measurement. The laser is a CLASS 1 EN/IEC 60825-1 device. A warning and explanation label, as shown above, is attached to the product as appropriate.

QV HYBRID TYPE1
SERIES 365 — CNC Vision Measuring System Equipped with Laser Non-contact Displacement Sensor

- This dual system with a non-contact displacement sensor for scanning enables measurement of minute height differences and 3D shapes.
- The double-pinhole technique is used as the detection method of the displacement sensor. It is less directional compared with the knife-edge and triangulation techniques.
- The small laser spot with diameter of about 2 µm makes it possible to measure minute shapes.

Features: QV HYBRID TYPE1

- The focusing point method minimizes the difference in the measuring face reflectance and achieves high measurement reproducibility.
- Capable of measuring detailed shapes in high resolution.

COMMON SPECIFICATIONS

Items	Model No.	QVH1 Apex 302	QVH1 Apex 404	QVH1 Apex 606	Hyper QVH1 302	Hyper QVH1 404	Hyper QVH1 606
Measuring range (X×Y×Z)	Vision	300×200×200 mm 12"x8"x8"	400×400×250 mm 16"x16"x10"	600×650×250 mm 24"x26"x10"	300×200×200 mm 12"x8"x8"	400×400×250 mm 16"x16"x10"	600×650×250 mm 24" x26"x10"
Vision measuring accuracy*	E_{1X}, E_{1Y}	(1.5 + 3L/1000) µm			(0.8 + 2L/1000) µm		
	E_{1Z}	(1.5 + 4L/1000) µm			(1.5 + 2L/1000) µm		
	E_{2XY}	(2.0 + 4L/1000) µm			(1.4 + 3L/1000) µm		
Displacement sensor measuring accuracy*	E_{1Z}	(1.5 + 4L/1000) µm			(1.5 + 2L/1000) µm		

* Inspected to a Mitutoyo standard. L=length between two arbitrary points (mm)

M

Vision Measuring Systems

MeasurLink® ENABLED
Data Management Software by Mitutoyo

UMAP Vision System TYPE2
SERIES 364 — Micro Form Measuring System

Micro probe, UMAP

Ultrasonic Micro Probe UMAP

Contact measurement of a small diameter and its section or contour is possible, which is difficult with a conventional Vision Measuring System or CMM. Capable of high accuracy, sophisticated, non-contact and contact measurement on one machine. With a minimum measuring force of 1 μN, it is not only less likely to mark workpiece surfaces, but also enables measurement of workpieces that are highly susceptible to deformation.

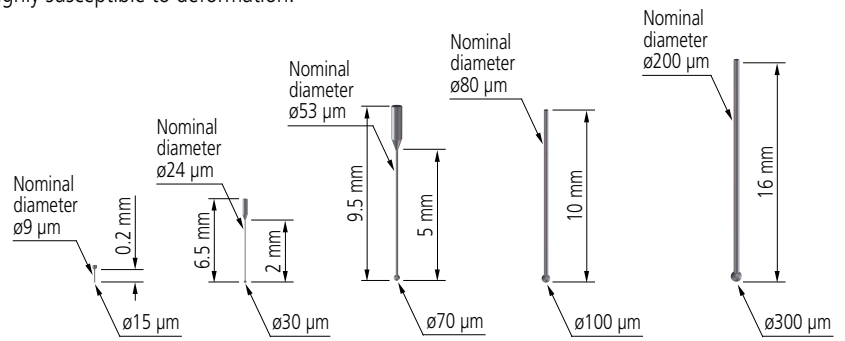

UMAP 101 Stylus

ø15 μm

UMAP 103 Stylus

ø30 μm

UMAP 107 Stylus

ø70 μm

UMAP 110 Stylus

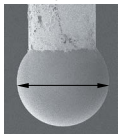

ø100 μm

UMAP 130 Stylus

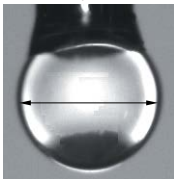

ø300 μm

Detection of surface principle

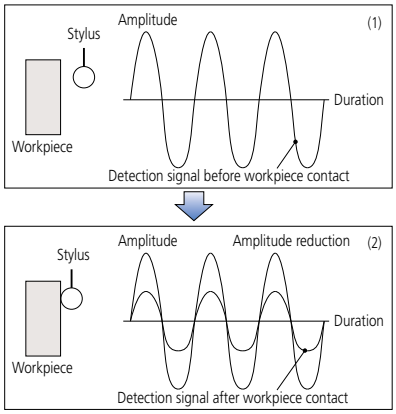

(1) In this drawing, the stylus is vibrating with micro amplitude. If it does not come into contact with the workpiece, the vibration state is maintained.

(2) As the stylus comes into contact with the workpiece surface, the vibration amplitude decreases as the contact increases. When the decreasing amplitude falls below a certain level, a touch-trigger signal is generated.

Typical applications

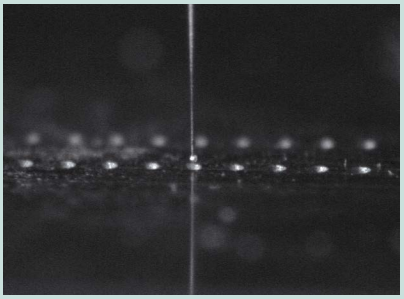

Contour measurement of a ø0.125 mm hole

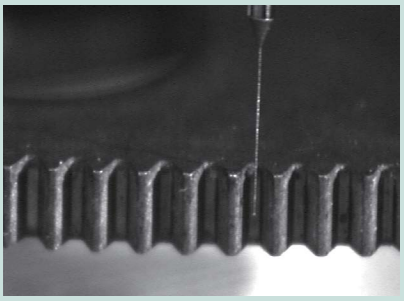

Measuring form of micro gear teeth

SPECIFICATIONS

Items			Model No. Hyper UMAP 302	ULTRA UMAP 404
Measuring range (common to vision and **UMAP**)	X-axis×Y-axis		185×200 mm 7″x8″	285×400 mm 11″x16″
	Z-axis	**UMAP 101/103**	175 mm / 6.9″	
		UMAP 107/110	180 mm / 7″	
		UMAP 130	185 mm / 7.3″	
Vision measuring accuracy*	Vision	$E_{UX,MPE}$, E_{UYMPE}	(0.8 + 2L/1000) μm	(0.35 + L/1000) μm
		$E_{UZ,MPE}$	(1.5 + 2L/1000) μm	(1.5 + 2L/1000) μm
		$E_{UXY,MPE}$	(1.4 + 3L/1000) μm	(0.5 + 2L/1000) μm
	Stream (optional)	E_{1X}, E_{1Y}	(1.5 + 3L/1000) μm	-
		E_{2XY}	(2.0 + 4L/1000) μm	-
	Optical Magnification		2.5x objective & middle magnification tube lens	5x objective & middle magnification tube lens
	UMAP	E_{1X}, E_{1Y}	(1.7 + 3L/1000) μm	(1.5 + 3L/1000) μm
Repeatability	Dimensional measurement within FOV		-	$3\sigma \leq 0.1$ μm
	UMAP	**UMAP 101/103/107**	$\sigma \leq 0.1$ μm	$\sigma \leq 0.08$ μm
		UMAP 110/130	$\sigma \leq 0.15$ μm	$\sigma \leq 0.12$ μm

* Inspected to a Mitutoyo standard. L=length between two arbitrary points (mm)

Refer to **UMAP Vision System** Brochure (**E14000-US**) for more details.

M

MeasurLink® ENABLED
Data Management Software by Mitutoyo

MiCAT
Mitutoyo Intelligent Computer Aided Technology
the standard in world metrology software
VISION

Vision Measuring Systems

QVPAK
Operating Software for Quick Vision Systems

- **QVPak** is the control software used on all Quick Vision machines. It is used to write programs, run programs, and perform manual measurements.

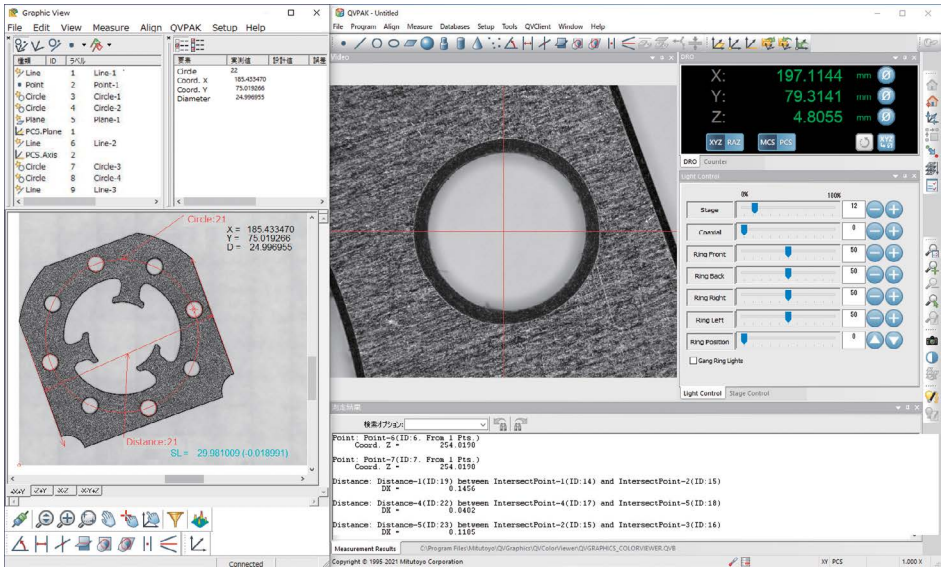

Edge Detection Tools

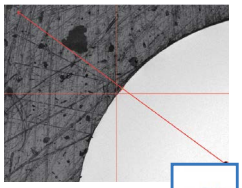

Simple Tool
This is a basic tool for detecting one point.

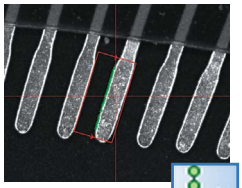

Box Tool
This tool detects straight edges with a minimum of one pixel interval. Compared to the simple tool, the Box tool can perform averaging and remove abnormal points, which enables stable measurements.

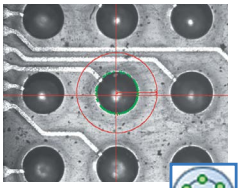

Circle Tool
This tool detects rounded edges with a minimum of one pixel space. Edges can be specified easily with a single click.

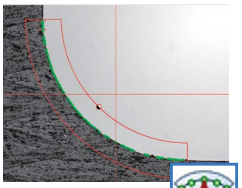

Arc Tool
This tool is suited for detection of arcs and corner radii.

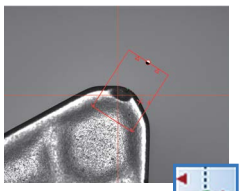

Maximum / Minimum Tool
This tool detects the maximum or minimum on the specified edge.

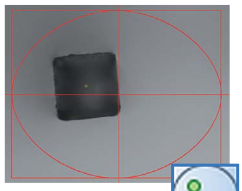

Area Centroid Tool
This tool detects the position of a form's centroid, and is suited for locating the position of different forms.

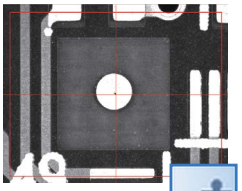

Pattern Search Tool
This tool performs pattern matching to detect a position, and is optimal for positioning alignment marks and similar tasks.

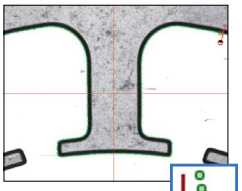

Auto Trace Tool
This is a shape-measuring tool that automatically tracks a contour with input consisting only of a start point and end point.

Where to Buy

Refer to the **QUICK VISION** Series Brochure (**2316**) for more details.

M

Vision Measuring Systems

Application Software (Optional)

Form assessment/analysis software
FORMTRACEPAK-AP

Verification of designed value and form analysis are performed on the basis of the contour data obtained via the QV auto trace tool, non-contact displacement sensor, PFF, and WLI.

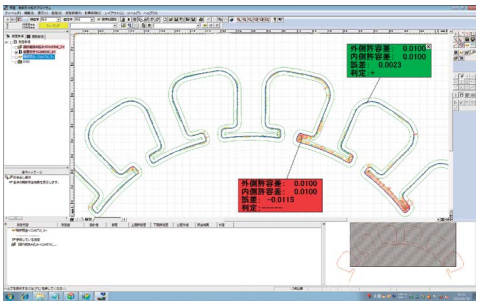

FORMTRACEPAK-PRO

This software performs 3D form analysis from the data obtained via the non-contact displacement sensor of the **QV HYBRID** Series.

MCubeMap

Allows you to analyze parameters compliant with JIS B681-2: 2018 (ISO25178-6: 2010), such as Sa, Sq and other height parameters from the 3D data captured by **QVWLI**.

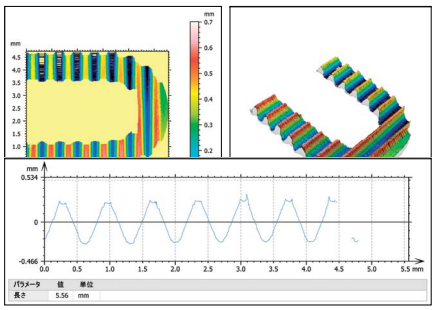

QV3D Function

This option generates 3D forms from the PFF (Points From Focus) or WLI (White Light Interferometer) data.

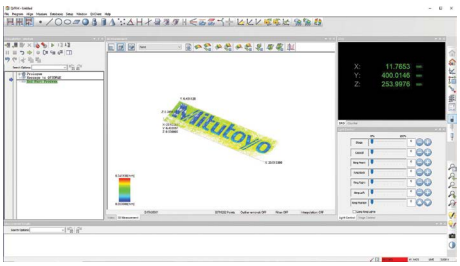

Measurement support software
QV3DCAD

QV3DCAD uses 3D CAD models to easily create **QVPAK** part programs both online and offline.

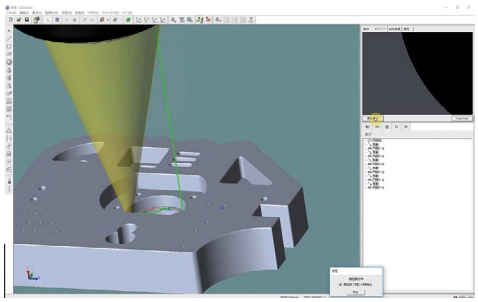

Offline teaching software
EASYPAG-PRO

This software creates **QVPAK** measurement procedure programs using 2D CAD data.

Statistical processing software
MeasurLink®

This software enables statistical arithmetic processing of measurement results.

MeasurLink®

External control software
QVEio

Allows you to externally control or output the operating status of a QV connected to a PLC or PC.

MSurf-I

This software compares scanned points collected by the QV system to a solid model allowing profile of a surface measurement.

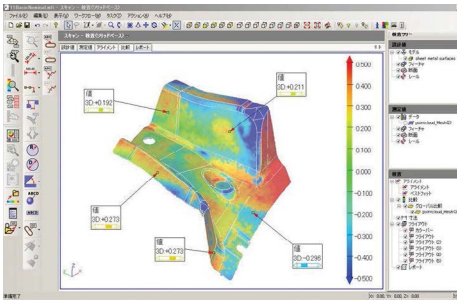

Get a Quote

Defect Detection

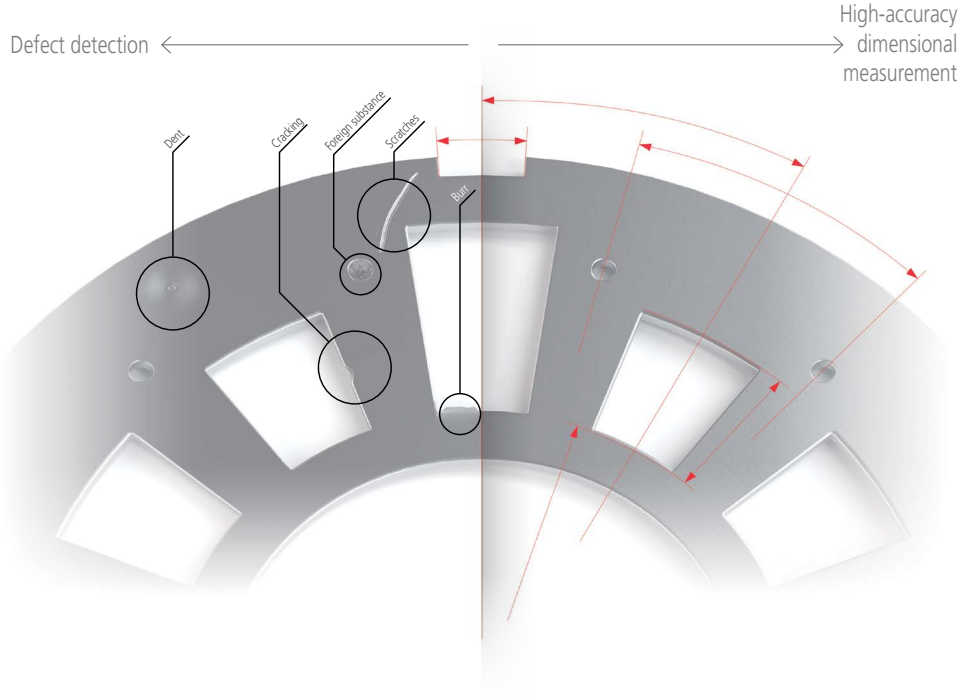

DDPak-QV

- Designed for Quick Vision machines.
- Software only add on — no additional hardware required.
- Can detect:
  - Contamination
  - Debris
  - Scratches, Burrs, Flash, etc.
  - Deviation from CAD

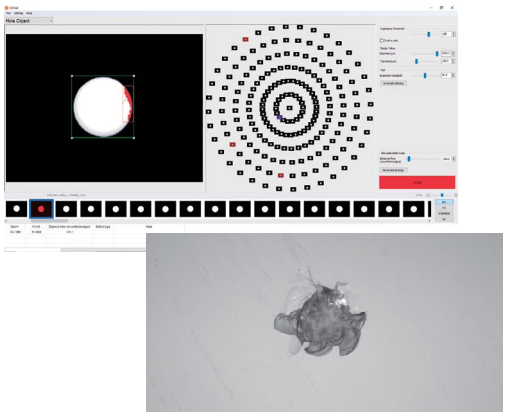

AI Inspect

- Designed for any camera hardware.
- Software only option that runs on Quick Vision or any camera hardware.
- Designed to detect defects that the AI has been trained on.

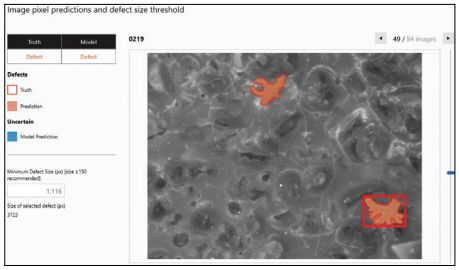

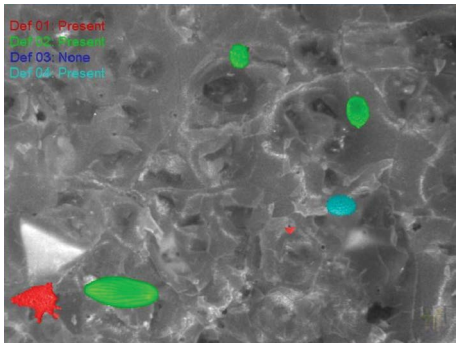

M

Vision Measuring Systems

QM-Fit
SERIES 359 — Smart Vision System

- Measurements are automatically detected based on the workpiece. To start measuring a workpiece, simply place it on the measuring stage.
- Intuitive, touch interface.
- Standalone machine with integrated PC and display.
- More compact than conventional measuring machines and can be installed almost anywhere.

Automatic Element Detection

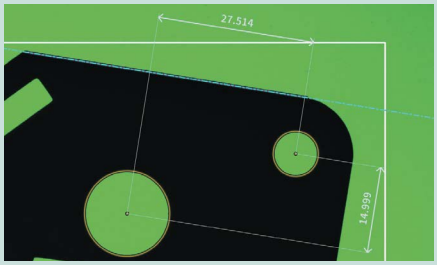

Guidance Display

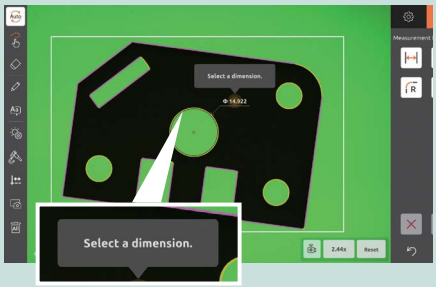

Caliper Snap

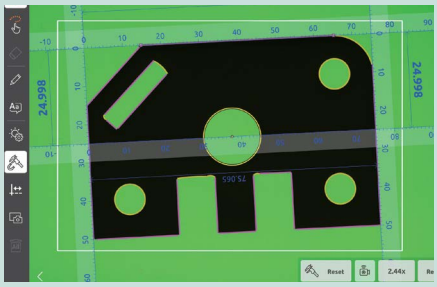

SPECIFICATIONS

Model No.		QMF-A1208-A
Order No.		359-752-13
Image sensor		20-megapixel color CMOS
Touch panel monitor	Size	15.6 in
	Resolution	1980 x 1080
	Zoom magnification (digital)	Max. 100X
Illumination	Stage light	Green LED
	Ring light	White LED: 8 segments
	Max. loading capacity	22 lbs / 10 kg (uniformly disibuted load)
Measurement specifications (Accuracy assurance temperature: 20±1°C)	Measurement accuracy*	±10 µm
	Repeatability*	2σ 4 µm
	Measurement range	4.5 x 2.95 in / 115 x 75 mm
	Max. workpiece height	1.4 in / 36 mm

* Based on in-house inspection criteria

Refer to the **QM-Fit** Series Brochure (**E14032-US**) for more details.

M

MeasurLink® ENABLED
Data Management Software by Mitutoyo

Vision Measuring Systems

Quick Image
SERIES 361 — Non-contact 2D Vision Measuring System

QI-C2017D

- This series of 2D vision measuring machines offers high-efficiency measurement by employing a telecentric optical system that has a deep focal depth and a wide field of view.
- Includes Metlogix M3 software for easy, intuitive operation.
- The stitching function enables the entire view of a large workpiece so that highly accurate and speedy measurement can be performed.
- An optional model with a motorized stage offers easy and comfortable stage operation.
- A single click enables multiple measurements in one display. A batch measurement can be applied to multiple workpieces in the display after executing a pattern search based on the workpiece position.
- This series is equipped with a 3-megapixel color camera. Even with low magnification, high repeatability can be obtained.
- The choice of five stage sizes makes it easy to choose a machine to suit the user's application.

Motorized stage on QI-C

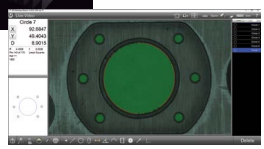

M3 software

Refer to the **QUICK IMAGE** Series Brochure (**E14009-US**) for more details.

SPECIFICATIONS

	Manual stage model					Motorized stage model		
Model No.	**QI-A1010D**	**QI-A2010D**	**QI-A2017D**	**QI-A3017D**	**QI-A4020D**	**QI-C2010D**	**QI-C2017D**	**QI-C3017D**
Order No.	**361-850A**	**361-851A**	**361-852A**	**361-853A**	**361-854A**	**361-860A**	**361-861A**	**361-862A**
Package No.	**361-850M3Pk**	**361-851M3PK**	**361-852M3PK**	**361-853M3PK**	**361-854M3PK**	**361-860APK**	**361-861APK**	**361-862APK**
Measuring range (X×Y)	3.94" x 3.94" 100×100mm	7.87" x 3.94" 200×100mm	7.87" x 6.69" 200×170mm	11.8" x 6.69" 300×170mm	15.7" x 7.87" 400×200mm	7.87" x 3.94" 200×100mm	7.87" x 6.69" 200×170mm	11.8" x 6.69" 300×170mm
Effective stage glass size	6.69" x 6.69" 170×170mm	9.53" x 5.51" 242×140mm	10.2" x 9.06" 260×230mm	14.2" x 9.06" 360×230mm	17.3" x 9.13" 440×232mm	9.53" x 5.51" 242×140mm	10.2" x 9.06" 260×230mm	14.2" x 9.06" 360×230mm
Maximum stage loading *1	Approx. 22 lbs.(10kg)		Approx. 44 lbs.(20kg)		Approx. 33 lbs. 15kg	Approx. 22 lbs. 10kg	Approx. 44 lbs.(20kg)	
Main unit mass	Approx. 143 lbs. 65kg	Approx. 152 lbs. 69kg	Approx. 330 lbs. 150kg	Approx. 348 lbs. 158kg	Approx. 361 lbs. 164kg	Approx. 158 lbs. 72kg	Approx. 337 lbs. 153kg	Approx. 354 lbs. Approx. 161kg

*1 Does not include extremely offset or concentrated loads

			QI-A / QI-C
View field			1.26" x 0.94" (32×24mm)
Measurement mode			High resolution mode / Normal mode *4
Travel range (Z-axis)			3.94"(100mm)
Accuracy	Measurement accuracy within the screen *1		±4μm
	Repeatability within the screen (±2σ) *2	High resolution mode	±1μm
		Normal mode	±2μm
	Measurement accuracy (E1xy) *1		±(3.5+0.02L)μm L: arbitrary measuring length (mm)
Monitor magnification *3			7.6X
Optical system	Magnification (Telecentric Optical System)		0.2X
	Depth of focus	High resolution mode	±0.6mm
		Normal mode	±11mm
	Working distance		3.54"(90mm)
Camera			3 million pixels, 1/2", full color
Illumination			Transmitted light: Green LED telecentric illumination Co-axial light: White LED Ring light: 4-quadrant white LED
Power supply			100-240VAC 50/60Hz
Accuracy guaranteed temperature range			19-21°C

*1 Inspected to Mitutoyo standards by focus point position.
*2 The measuring accuracy is guaranteed to be accurate within the depth of focus.
*3 For 1X digital zoom (when using the 22-inch-wide monitor)
*4 Patent registered (Japan)

Mitutoyo

Vision Measuring Systems

MeasurLink® ENABLED
Data Management Software by Mitutoyo

QS-L/AFC
SERIES 359 — Manual Vision Measuring System

- Manual vision measuring system with a high speed, high-definition auto focus 3-megapixel camera.
- High-speed height measurement with motorized auto focus.
- A 4-quadrant high-intensity LED ring light provides excellent observation performance.
- The zoom unit and interchangeable objectives achieve a maximum magnification ratio of 14X. Viewing possibilities extend from low magnification wide view measurement to high magnification micro-measurement.

QS-L3017Z/AFC

Auto focus image

From wide view measurement to micro-measurement

Optical magnification		0.5X	0.65X	0.75X	0.85X	0.98X	1X	1.28X	1.3X	1.5X	1.7X	2X	2.25X	2.5X	3X	3.5X	3.75X	4X	5X	5.25X	7X
View field (mm)	Horizontal (H)	13.2	10.2	8.8	7.8	6.8	6.6	5.2	5.1	4.4	3.9	3.3	2.9	2.6	2.2	1.8	1.7	1.7	1.3	1.2	0.9
	Vertical (V)	9.9	7.7	6.6	5.9	5.1	5.0	3.9	3.8	3.3	2.9	2.4	2.2	2.0	1.6	1.4	1.3	1.2	1.0	1.0	0.7
Total magnification (on the monitor)		20	26	30	34	39	40	51	52	60	68	79.3	89	99.3	119	138.7	149	158.7	198.7	208	277.3
Objective lens	1X objective (optional) Working distance	74 mm																			
	1.5X objective (standard accessory) Working distance	42 mm																			
	2X objective (optional) Working distance	42 mm																			

Note: The total magnification indicates the magnification on the monitor when the size of the **QSPAK** video window is 252.7×214.9 mm (default).

Find Training

SPECIFICATIONS

Model No.		QS-L2010Z/AFC	QS-L3017Z/AFC	QS-L4020Z/AFC
Drive method		Auto focus equipped, X, Y-axis: manual; Z-axis: motor-operated		
Measuring range (X×Y×Z)		200×100×150 mm 8"x4"x6"	300×170×150 mm 12"x6.7"x6"	400×200×150 mm 16"x8"x6"
Resolution/Scale unit		0.1 µm/Linear encoder		
Vision measuring accuracy*1*2	X-axis, Y-axis	(2.2 + 0.02L/1000) µm		
	Z-axis	(4.5 + 0.006L/1000) µm		
Accuracy guaranteed temperature		20±1 °C		
Observation unit*3		7X zoom (8 steps) interchangeable objective lenses (1X objective 0.5X - 3.5X; 1.5X objective 0.75X - 5.25X; 2X objective 1X - 7X)		
Image detection method		3 megapixel, CMOS color camera (1/2 in)		
Illumination	Transmitted light	White LED		
	Co-axial light	White LED		
	Ring light	4-quadrant white LED		

*1 Inspected to a Mitutoyo standard. L=length between two arbitrary points (mm)
*2 3X lens magnification or greater
*3 1X and 2X objective lenses are optional

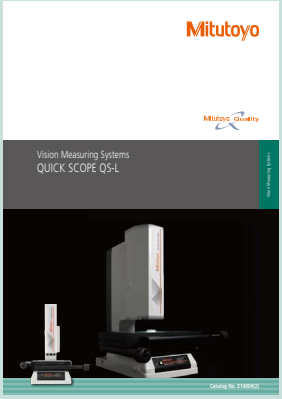

Refer to the **QUICK SCOPE QS-L** Brochure (**2319**) for more details.

M

STANDARDS

	Page
Bore Gage Checker	C-57,58
CERA Caliper Checker	D-64
CERA Inside Micro Checker	C-30
Check Master	E-30
Depth Micro Checker	D-70
Gage Blocks	E-1-25
Height Master	E-26
High Precision Square	E-33
Micrometer Stands	B-76
Optical Flats	B-70
Optical Parallels	B-70
Setting Rings	C-53-56
Square Master	E-31
Standard Scales	E-32
Universal Height Master	E-29
Working Standard Scales	E-32

MEASUREMENT OF INSIDE DIMENSIONS

■ ONE-DIMENSIONAL	
ABSOLUTE Borematic	C-13-16
ABSOLUTE Digimatic Bore Gages	C-49,50
ABSOLUTE Digimatic Caliper	D-5,6
Bore Gages	C-31-58
CERA Inside Micro Checker	C-30
Dial Caliper	D-8
Digimatic Holtest	C-3
Groove Micrometers	B-67
Holtest	C-1-16
Inside Micrometers	C-17-30
Telescoping Gage Set	B-69
Vernier Caliper	D-9,10
■ TWO-DIMENSIONAL	
Measuring Microscope	I-18,19
Profile Projector	I-3-10
QM-Data200	I-26
QUICK IMAGE (QI)	M-14
Toolmakers' Microscopes	I-17
■ THREE-DIMENSIONAL	
Coordinate Measuring Machines	L-3-12
Micro Form Measuring System	M-9
QUICK SCOPE (QS)	M-15
QUICK VISION Series (QV)	M-3-8

MEASUREMENT OF OUTSIDE DIMENSIONS

	Page
■ ONE-DIMENSIONAL	
Calipers	D-3-45
Dial Snap Gage	F-100
Dial Thickness Gages	F-91-94
Digimatic Micrometers	B-3-15
Digimatic Thickness Gages	F-89,90
Digit Outside Micrometers	B-21,22
Litematic	G-20
Micrometers	B-3-67
Quickmike	B-11
Steel Rules	E-37,38
Working Standard Scales	I-1-16
■ TWO-DIMENSIONAL	
Measuring Microscope	I-18,19
Profile Projector	I-3-10
QM-Data200	I-26
QUICK IMAGE (QI)	M-14
Toolmakers' Microscopes	I-17
■ THREE-DIMENSIONAL	
Coordinate Measuring Machines	L-3-12
Micro Form Measuring System	M-9
QUICK SCOPE (QS)	M-15
QUICK VISION Series (QV)	M-3-8

ANGLE MEASUREMENT

■ ONE-DIMENSIONAL	
Bevel Protractor	E-41
Digimatic Universal Protractor	E-42
Measuring Microscope	I-18,19
Profile Projector	I-3-10
QM-Data200	I-26
QUICK IMAGE (QI)	M-14
Toolmakers' Microscopes	I-17
■ TWO-DIMENSIONAL	
Universal Bevel Protractor	E-41
Vision Unit	I-27
■ THREE-DIMENSIONAL	
Coordinate Measuring Machines	L-3-12
Micro Form Measuring System	M-9
QUICK SCOPE (QS)	M-15
QUICK VISION Series (QV)	M-3-8

Applications Index

DEPTH MEASUREMENT

	Page
■ ONE-DIMENSIONAL	
ABSOLUTE Digimatic Caliper	D-5,6
ABSOLUTE Digimatic Depth Gage	D-71,72
Depth Gage Attachment (Optional Accessory for Calipers)	D-81
Depth Micrometer (Interchangeable Rod Type)	C-67,68
Dial Caliper	D-8
Dial Depth Gage	D-73
Extension Bases (Optional Accessory for Depth Gage)	D-80
Vernier Caliper	D-9-10
Vernier Depth Gage	D-74,75
■ TWO-DIMENSIONAL	
Coordinate Measuring Machines	L-3-12
Linear Height	D-51,52
Linear Height	D-51,52
Measuring Microscope	I-18,19
Micro Form Measuring System	M-9
QUICK VISION Series (QV)	M-3-8

HEIGHT MEASUREMENT

■ ONE-DIMENSIONAL	
Black Granite Surface Plates	E-47
Dial Height Gage	D-61
Digimatic Height Gage	E-55-58
Height Master	E-26
QM-Height	D-51
Universal Height Master	E-29
Vernier Height Gage	D-59,60
■ TWO-DIMENSIONAL	
Linear Height	D-51,52
Measuring Microscope	I-18,19
■ THREE-DIMENSIONAL	
Coordinate Measuring Machines	L-3-12
Micro Form Measuring System	M-9
QUICK SCOPE (QS)	M-15
QUICK VISION Series (QV)	M-3-8

MEASUREMENT OF COMPLEX 3D PARTS

■ THREE-DIMENSIONAL	
Coordinate Measuring Machines	L-3-12
QUICK SCOPE (QS)	M-15
QUICK VISION Series (QV)	M-3-8
Micro Form Measuring System	M-9

COMPARISON MEASUREMENT

	Page
■ ONE-DIMENSIONAL	
ABSOLUTE Borematic	C-13-16
ABSOLUTE Digimatic Caliper	D-5,6
Calibration Tester	F-88
Comparator Stands	F-107,108
Dial Gage Stands	F-104,105
Dial Indicators	F-25-62
Dial Snap Gage	F-100
Dial Snap Meters	B-65
Dial Test Indicators	F-75-80
Digimatic Height Gage	E-55-58
Digimatic Holtest	C-3
Digimatic Indicators	F-3-23
Digimatic Micrometers	B-3-15
Gage Block Comparator	E-25
Gage Blocks	E-1-25
Height Master	E-26
Indicating Micrometers	B-63,64
Laser Scan Micrometers	G-31-38
Linear Gages	G-3-16
Litematic	G-20
QM-Height	D-51
Telescoping Gage Set	B-69
■ TWO-DIMENSIONAL	
Linear Height	D-51,52
Measuring Microscope	I-18-19
Profile Projector	I-3-10
QM-Data200	I-26
QUICK IMAGE (QI)	M-14
Toolmakers' Microscopes	I-17
■ THREE-DIMENSIONAL	
Coordinate Measuring Machines	L-3-12
Micro Form Measuring System	M-9
QUICK SCOPE (QS)	M-15
QUICK VISION Series (QV)	M-3-8

STEP MEASUREMENT

■ ONE-DIMENSIONAL	
ABSOLUTE Digimatic Caliper	D-5-6
Dial Caliper	D-8
Dial Height Gage	D-61
Dial Indicators	F-25-62
Dial Test Indicators	F-75-80
Digimatic Height Gage	E-55-58
Digimatic Indicators	F-3-23
Linear Gages	G-3-16
QM-Height	D-53,54
Uni-Mike	B-61
Vernier Caliper	D-9-10
Vernier Height Gage	D-59,60
■ TWO-DIMENSIONAL	
Linear Height	D-51,52
■ THREE-DIMENSIONAL	
Coordinate Measuring Machines	L-3-12
Micro Form Measuring System	M-9
QUICK SCOPE (QS)	M-15
QUICK VISION Series (QV)	M-3-8

MEASUREMENT OF ELASTIC PARTS

	Page
■ ONE-DIMENSIONAL	
ABSOLUTE Digimatic Low Force Caliper	D-42
Litematic	G-20
■ TWO-DIMENSIONAL	
Measuring Microscope	I-18-19
Profile Projector	I-3-10
QUICK IMAGE (QI)	M-14
Toolmakers' Microscopes	I-17
■ THREE-DIMENSIONAL	
Coordinate Measuring Machines	L-3-12
Micro Form Measuring System	M-9
QUICK SCOPE (QS)	M-15
QUICK VISION Series (QV)	M-3-8

MEASUREMENT OF SHEET METALS

Laser Scan Micrometers	G-31-38
Sheet Metal Micrometers	B-43-45

NON-CONTACT MEASUREMENT

■ ONE-DIMENSIONAL	
Laser Scan Micrometers	G-31-38
■ TWO-DIMENSIONAL	
Measuring Microscope	I-18,19
Profile Projector	I-3-10
Toolmakers' Microscopes	I-17
■ THREE-DIMENSIONAL	
Micro Form Measuring System	M-9
QUICK SCOPE (QS)	M-15
QUICK VISION Series (QV)	M-3-8

MULTI-POINT MEASUREMENT

Dial Indicators	F-25-62
Digimatic Indicators	F-3-23
Linear Gages	G-3-16
Linear Gage Counters	G-11-16

MEASURING INSTRUMENTS TO BE USED AS SENSOR

ABSOLUTE Digimatic Scale Units	H-3-7
Dial Indicators	F-25-62
Dial Test Indicators	F-75-80
Digimatic Indicators	F-3-23
Laser Scan Micrometers	G-31-38
Linear Gages	G-3-16
Linear Scales	H-8-22

MEASUREMENT OF FORM (SURFACE ROUGHNESS, ROUNDNESS), SQUARENESS, AND PARALLELISM

	Page
Black Granite Surface Plates	E-47,48
Contracer	J-8
Coordinate Measuring Machines	L-3-12
Dial Test Indicators	F-75-80
Formtracer	J-9-12
High Precision Square	E-33
Optical Flats	B-70
Optical Parallels	B-70
Roundtest	J-21-24
Square Master	E-31
Surftest	J-3-7

MEASUREMENT OF CENTER-TO-CENTER DISTANCES

■ ONE-DIMENSIONAL	
ABSOLUTE Digimatic Offset Caliper	D-27
ABSOLUTE Digimatic Offset Centerline Caliper	D-29
Black Granite Surface Plates	E-47,48
Center Probe (for Height Gages)	D-63
QM-Height	D-53,54
■ TWO-DIMENSIONAL	
Linear Height	D-51,52
Profile Projector	I-3-10
Toolmakers' Microscopes	I-17
Measuring Microscope	I-18,19
QM-Data200	I-12
QUICK IMAGE (QI)	M-14
■ THREE-DIMENSIONAL	
Coordinate Measuring Machines	L-3-12
Micro Form Measuring System	M-9
QUICK SCOPE (QS)	M-15
QUICK VISION Series (QV)	M-3-8

SCREW THREAD MEASUREMENT

■ ONE-DIMENSIONAL	
3-Wire Units	B-74
Digimatic Micrometers	B-3-15
Digit Outside Micrometers	B-21,22
Micrometers	B-3-67
Point Micrometers	B-51,52
Screw Thread Micrometers	B-31
Thread Pitch Gages	E-43
V-Anvil Micrometers	B-53,54
■ TWO-DIMENSIONAL	
Contracer	J-8
Measuring Microscope	I-18,19
Profile Projector	I-3-10
QM-Data200	I-12
QUICK IMAGE (QI)	M-14
Toolmakers' Microscopes	I-17
■ THREE-DIMENSIONAL	
Coordinate Measuring Machines	L-3-12
Micro Form Measuring System	M-9
QUICK SCOPE (QS)	M-15
QUICK VISION Series (QV)	M-3-8

Applications Index

MEASUREMENT OF GEARS

	Page
■ ONE-DIMENSIONAL	
Disc Micrometers	B-34-36
Gear Tooth Micrometers	B-41,42
■ TWO-DIMENSIONAL	
Measuring Microscope	I-18,19
Profile Projector	I-3-10
QM-Data200	I-12
QUICK IMAGE (QI)	M-14
Toolmakers' Microscopes	I-17
■ THREE-DIMENSIONAL	
Coordinate Measuring Machines	L-3-12
Micro Form Measuring System	M-9
QUICK SCOPE (QS)	M-15
QUICK VISION Series (QV)	M-3-8

HARDNESS MEASUREMENT

Hardness Testing Machines	K-14
Portable Hardness Tester	K-14

MEASUREMENT ASSOCIATED WITH SEMICONDUCTOR/LCD FABRICATION

■ ONE-DIMENSIONAL	
ABSOLUTE Digimatic Caliper	D-5-6
Dial Caliper	D-8
Dial Indicators	F-25-62
Dial Test Indicators	F-75-80
Digimatic Indicators	F-3-23
Digimatic Micrometers	B-3-15
Digit Outside Micrometers	B-21,22
Linear Gages	G-3-16
Litematic	G-20
Micrometers	B-3-67
Vernier Caliper	D-9-10
■ TWO-DIMENSIONAL	
FS70	I-28
FS objectives	I-31-35
Measuring Microscope	I-18,19
Profile Projector	I-3-10
QM-Data200	I-26
QUICK IMAGE (QI)	M-14
Toolmakers' Microscopes	I-17
VMU	I-29
WIDE VMU	I-29
■ THREE-DIMENSIONAL	
Micro Form Measuring System	M-9
QUICK SCOPE (QS)	M-15
QUICK VISION Series (QV)	M-3-8

DIGITAL READOUT AND POSITION FEEDBACK OF MACHINE TOOLS

ABSOLUTE Digimatic Scale Units (SD)	G-3-16
Linear Gages	G-1-19
Linear Scales	H-1-6

STATISTICAL PROCESS CONTROL

	Page
Digimatic Mini-Processor DP-1VA LOGGER	A-26
MeasurLink®	A-2-10
Multiplexer MIG -1,2,4,8 USB	A-25
USB Input Tool Direct USB-ITN	A-23,24
USB-ITPAK V3.0	A-11
U-WAVE Series	A-17-22

MEASUREMENT IN ROLL FORMING

■ ONE-DIMENSIONAL	
ABSOLUTE Digimatic Caliper	D-5-6
Black Granite Surface Plates	E-47,48
Bore Gages	C-31-58
Dial Caliper	D-8
Dial Height Gage	D-61
Dial Indicators	F-25-62
Dial Test Indicators	F-75-80
Digimatic Height Gage	E-55-58
Digimatic Indicators	F-3-23
Digimatic Micrometers	B-3-15
Digit Outside Micrometers	B-21,22
Laser Scan Micrometers	G-31-38
Linear Gages	G-3-16
Micrometers	B-3-67
QM-Height	D-51
Vernier Caliper	D-9-10
Vernier Height Gage	D-59,60
■ TWO-DIMENSIONAL	
Linear Height	D-51,52
■ THREE-DIMENSIONAL	
Coordinate Measuring Machines	L-3-12
Micro Form Measuring System	M-9
QUICK VISION Series (QV)	M-3-8
Roundtest	J-21-24
Surftest	J-3-7

QUICK GUIDE TO PRECISION MEASURING INSTRUMENTS

Quality Control	
Micrometers	B-3-67
Micrometer Heads	B-82-120
Calipers	D-3-45
Depth Gages	D-71-81
Dial Indicators, Digital Indicators and Test Indicators	F-3-83
Gage Blocks	E-1-25
Height Gages	D-59,60
Inside Micrometers	C-17-29

SERIES No.	Description	Page
1 - 99		
1	Dial Indicators - Compact Type, Extra Small Diameter	F-26-27
1	Dial Indicators - Compact Type, Small Diameter	F-28-30
1	Dial Indicators - Compact One Revolution Type	F-31-32
1	Dial Indicators - Back Plunger Type Series 1	F-33-34
2	Dial Indicators - Standard Type, 0.01 mm Graduation	F-35-36
2	Dial Indicators - Standard Type, 0.001 mm & 0.005 mm	F-37-38
2	Dial Indicators - Water-proof Type, 0.01 mm & 0.001 mm	F-39-40
2	Dial Indicators - Standard Type, Inch Reading	F-41-42
2	Dial Indicators - Standard One Revolution Type	F-43-45
2	Dial Indicators - Standard, One Revolution, Water-proof	F-46-48
2	Dial Indicators - Standard, One Revolution, Lightweight	F-49-51
2	Dial Indicators - Long Stroke Type	F-52-54
2	Dial Indicators - Special Feature Models	F-56-57
2	Dial Indicators - Back Plunger Type	F-58-59
3	Dial Indicators - Long Stroke Type, Large Diameter	F-60-62
4	Dial Indicators - Long Stroke Type, Large Diameter	F-60-62
7	Micro Jack	B-121
7	Dial Depth Gage	D-83-84
7	Thickness Gages	F-91-94
7	Magnetic Stands	F-101-103
7	Dial Gage Stands	F-104-105
100 - 199		
102	Outside Micrometers	B-16
102	Ratchet Thimble Micrometer	B-17
103	Outside Micrometers	B-18-20
104	Outside Micrometers with Interchangeable Anvils	B-23-24
105	Outside Micrometers with Anvil Extension Collars	B-25-27
107	Indicator Type Micrometers	B-62
110	Micrometer Heads (Differential Screw Thread Translator (Extra-Fine Feed Type)	B-103-104
111	Spline Micrometers	B-50
112	Point Micrometers	B-52
112	Crimp Height Micrometers	B-60
113	Limit Micrometers	B-28
114	V-Anvil Micrometers (3 Flutes and 5 Flutes)	B-54
115	Tube Micrometers (Spherical Anvil and Flat Spindle Type)	B-46-48
117	"Uni-Mike"	B-61
118	Sheet Metal Micrometers	B-44
119	Sheet Metal Micrometers	B-45
122	Blade Micrometers (Non-Rotating Spindle Type)	B-57
123	Disc Micrometers (Rotating Spindle Type)	B-35-36
124	Gear Tooth Micrometers (Interchangeable Ball Anvil/Spindle Tip Type)	B-42
125	Screw Thread Micrometers	B-31
126	Screw Thread Micrometers (Interchangeable Anvil/Spindle Tip Type)	B-32-33
128	Depth Micrometer	D-69
129	Depth Micrometer (Interchangeable Rod Type)	D-67-68
131	Spline Micrometers	B-50
133	Tubular Inside Micrometers (Single-Rod Type)	C-17-18
137	Tubular Inside Micrometers (Extension-Rod Type)	C-19-21
137	Tubular Inside Micrometers (Extension-Rod Type - main unit)	C-21
139	Tubular Inside Micrometers (Extension-Pipe Type)	C-23-24
139	Tubular Inside Micrometers (Extension-Pipe Type - main unit)	C-25
140	Tubular Inside Micrometers (Extension-Pipe Type)	C-23-24
141	Inside Micrometers (Interchangeable-Rod Type)	C-29
142	Point Micrometers	B-52
142	Crimp Height Micrometers	B-60
143	Caliper Type Micrometers	B-30
145	Inside Micrometers (Caliper Type)	C-27-28
146	Groove Micrometers	B-67
147	Can Seam Micrometers	B-58
147	Hub Micrometers	B-58
148	Micrometer Heads (Small/Ultra-small Type)	B-85-86
148	Micrometer Heads (Short Thimble with Multiple Diameter Options)	B-87-89
148	Micrometer Heads (Small Standard Type)	B-90-92
148	Micrometer Heads (Small Thimble Diameter Standard Type)	B-93-95
148	Micrometer Heads (Locking-screw Type)	B-96-99
148	Micrometer Heads (Fine Spindle Feed of 0.1 mm/rev)	B-100-101
148	Micrometer Heads (Fine spindle Feed of 0.25 mm/rev)	B-102
149	Micrometer Heads (Small Standard Type with Carbide-tipped Spindle)	B-105-106
150	Micrometer Heads (Medium-sized Standard Type)	B-107-110
151	Micrometer Heads (Medium-sized Standard Type with 8 mm Diameter Spindle)	B-111-114
152	Micrometer Heads (Quick Spindle Feed of 1 mm/rev)	B-116
152	Micrometer Heads (Large Thimble Type)	B-117-118
152	Micrometer Heads (XY-Stage Type)	B-119
153	Micrometer Heads (Non-rotating Spindle Type)	B-115
153	Micrometer Heads (High Accuracy and Resolution)	B-120
155	Telescoping Gage Set	B-69
156	Micrometer Stands	B-76
157	Optical Parallels	B-70
158	Optical Flats	B-70
160	Vernier Caliper with Nib Style Jaws and Fine Adjustment	D-23-24
164	Digimatic Micrometer Heads	B-82-84
167	Setting Standards for Outside Micrometers	B-71-72
167	Setting Standards for Screw Thread Micrometers	B-73
167	Setting Standards for V-Anvil Micrometers	B-73
169	Disk Micrometers (Non-Rotating Spindle Type)	B-39
169	Paper Thickness Micrometers (Non-rotating Spindle Type)	B-40
170	i-Checker IC2000	F-87
170	UDT-2 Calibration Tester	F-88
172	Profile Projectors - PH-3515F	I-3-4
172	Accessories for Profile Projectors	I-11
174	Counter (KA-200)	H-8
176	TM-505B/1005B Toolmakers' Microscopes	I-17
176	MF Measuring Microscopes	I-18-19
176	MF Motorized Type Measuring Microscopes	I-20
176	MF-U High-power Multi-function Measuring Microscopes	I-21-22
176	MF-U Motorized Type Universal Measuring Microscopes	I-23
177	Setting Rings	C-53-56
178	Surftest SJ-220	J-3
178	Surftest SJ-310	J-3
178	Surftest SJ-210/310 Optional Accessories	J-4
178	Surftest SJ-410	J-5
178	Surftest SJ-500/SV-2100	J-6
178	Surftest Extreme SV-3000CNC/SV-M3000CNC	J-7
178	FORMTRACER Avant S3000 Series	J-9
182	Standard Scales	E-32
182	Working Standard Scales	E-32
182	Steel Rules	E-37-38
182	Semi-Flexible Rules	E-38
183	Pocket Comparators	I-38
183	Zoom Loupe	I-38
183	Clear Loupe	I-38
184	Thickness/Feeler Gages	E-39
186	Radius Gages	E-43
186	Radius Gages-Sets	E-44
187	Universal Bevel Protractor	E-40-41
187	Bevel Protractor	E-41
188	Pitch Gages	E-43
191	CRYSTA-Apex V PLUS Series 500/700/900	L-4
191	CRYSTA-Apex V Series 1200/1600/2000	L-5
191	CRYSTA-Apex EX 1200R Series	L-6
192	Digimatic Height Gage (Multi-function Type with SPC Data Output)	D-55-56
192	Dial Height Gage	D-61
193	Digit Outside Micrometers	B-21-22
197	Micrometer Heads (Long Stroke Non-rotating Spindle)	B-120

Numerical Index

SERIES No.	Description	Page
200 - 299		
21201	Digital/Dial Snap Gage	F-100
209	Digimatic Caliper Gages (Internal Tube Thickness Measurement)	F-95
209	Digimatic Caliper Gages (External Tube Thickness Measurement)	F-96
209	Dial Caliper Gages (Internal Measurement)	F-97
209	Dial Caliper Gages (External Measurement)	F-98
211	Roundtest RA-120/120P	J-21
211	Roundtest RA-1600M	J-22
211	Roundtest RA-2200	J-22
211	Roundtest RA-H5200AS / AH	J-23
211	Roundtest RA-2200 PLUS	J-23
211	Roundtest RA-H5200 PLUS	J-24
211	ROUNDTRACER EXTREME	J-25
211	Roundtracer Flash	J-25
215	Bore Gage Stand	C-34
215	Comparator Stands, Cast Iron Base	F-107
215	Comparator Stands, Granite Base	F-108
218	CV-2100 Contour Measuring Instruments	J-8
218	FORMTRACER Avant C3000/4000 Series	J-10
223	Disc Micrometers (Rotating Spindle Type)	B-35-36
227	ABSOLUTE Digimatic Micrometers	B-12
227	Disk Micrometers (Non-Rotating Spindle Type)	B-38
250	Micrometer Heads (Digit Counter Type)	B-121
264	Input Tools	A-23-24
264	Digimatic Mini-Processor	A-26
264	QM-Data200 2-D Processing Unit	I-26
293	MDH Micrometer	B-3
293	Ultra-High Accuracy Digimatic Micrometer	B-3-4
293	High-Speed and High-accuracy Digimatic Micrometer QuantuMike	B-5-6
293	Coolant Proof Micrometers (IP65 Digimatic Micrometer)	B-7-8
293	Digimatic Outside Micrometers	B-9-10
293	Quickmike	B-11
295	Tube Micrometers (Spherical Anvil and Flat Spindle Type)	B-46-48
300 - 399		
3302	Profile Projectors - PJ-PLUS	I-5-6
303	Profile Projectors - PJ-H30-High Accuracy	I-7-8
304	Profile Projectors - PV-5110	I-9-10
311	Square Master	E-31
311	High-Precision Square	E-33
314	V-Anvil Micrometers (3 Flutes)	B-53
317	"Uni-Mike"	B-61
318	Litematic (VL-50-B/50S-B)	G-20
323	Disc Micrometers (Rotating Spindle Type)	B-34
324	Gear Tooth Micrometers (Interchangeable Ball Anvil/Spindle Tip Type)	B-41
326	Screw Thread Micrometers (Interchangeable Anvil/Spindle Tip Type)	B-32
329	Depth Micrometer (Interchangeable Rod Type)	D-67-68
331	Spline Micrometers	B-49
337	Tubular Inside Micrometers (Extension-Rod Type)	C-19
339	Tubular Inside Micrometers (Extension-Pipe Type)	C-22
340	Outside Micrometers with Interchangeable Anvils	B-14-15
342	Point Micrometers	B-51
342	Crimp Height Micrometers	B-59
343	Caliper-Type Micrometers	B-29
345	Inside Micrometers (Caliper Type)	C-26
350	Digimatic Micrometer Heads	B-83-84
355	STRATO-Apex 500/700/900/1600 - High-Accuracy CNC CMM	L-7
355	STRATO-Active 700/900 - High-Accuracy CNC CMM	L-8
355	STRATO-Apex G 2000/3000/4000 - High-accuracy Guide Type CNC CMM	L-8
355	CARBstrato Series Car Body Measuring System	L-10
355	MACH KO-GA-ME Inline CNC CMM	L-12
356	LEGEX TAKUMI 500/700/900 - Ultra-High Accuracy CNC CMM	L-9
357	MiSTAR 555 & 575	L-3
359	Vision Unit System Retrofit	I-27
359	QM-Fit - Smart Vision System	M-13
359	QS-L/AFC - Manual Vision Measuring System	M-15
360	MACH-3A Inline CNC CMM	L-11
360	MACH-V Inline CNC CMM	L-11
361	Quick Image - Non-contact 2D Vision Measuring System	M-14
363	QV Active - CNC Vision Measuring System	M-3
363	QV Apex/QV Hyper - CNC Vision Measuring System	M-4
363	QV ACCEL - Large-Format CNC Vision Measuring System	M-5
363	ULTRA QV - Ultra-High Accuracy CNC Vision Measuring System	M-6
363	Hyper QVWLI - Non-contact 3D Measuring System	M-6
364	QV TP Active/QV TP Pro - CNC Vision Measuring System	M-7
364	UMAP Vision System TYPE2 - Micro Form Measuring System	M-9
365	QV Hybrid Type 1, Type 4 - CNC Vision Measuring System	M-8
368	Holtest (Three-point/Two-point Bore Micrometers)	C-7-10
368	Holtest (Type II)	C-11-12
369	Disk Micrometers (Non-Rotating Spindle Type)	B-37-38
377	MSM-400 Stereo Microscopes	I-36-37
378	FS-70 For Semiconductor Inspection	I-28
378	VMU Video Microscope Unit Accessories	I-29
378	Eyepieces - Microscope Unit Accessories	I-31
378	Objectives - Microscope Unit Accessories	I-31-35
389	Sheet Metal Micrometers	B-43
395	Tube Micrometers (Spherical Anvil and Flat Spindle Type)	B-46-48
400 - 499		
406	Outside Micrometers (Non-Rotating Spindle Type)	B-13
422	Blade Micrometers (Non-Rotating Spindle Type)	B-55-56
468	Digimatic Holtest (Three-point Bore Micrometers)	C-3-6
500 - 599		
500	ABSOLUTE Coolant Proof Caliper	D-3-4
500	ABSOLUTE Digimatic Caliper	D-5-6
500	ABSOLUTE Digimatic Long Range Caliper	D-7
505	Dial Caliper	D-8
506	Vernier Height Gage	D-59-60
510	Indicating Micrometers	B-63-64
511	Bore Gages (Small Holes)	C-35-36
511	Bore Gages	C-37-40
511	Bore Gages (Short Leg Type)	C-41-43
511	Bore Gages (Micrometer Head)	C-44-46
511	Bore Gages (Blind Holes)	C-47-48
511	ABSOLUTE Digimatic Bore Gages	C-49-50
511	Extension Rod (Accessories for Bore Gages)	C-51-52
513	Dial Test Indicator	F-75
513	Dial Test Indicator (Standard Type)	F-76-77
513	Dial Test Indicator Standard (20° Tilted Face), Vertical, and Horizontal	F-78-79
513	Dial Test Indicator (Universal Type)	F-80
513	Pocket Type Dial Test Indicator	F-81-83
514	Vernier Height Gage	D-59-60
515	Inside Micro Checker	C-30
515	Bore Gage Checker	C-57-58
515	CERA Caliper Checker	D-64
515	Depth Micro Checker	D-70
515	Height Master	E-26
515	Digital Height Master	E-27
515	Universal Height Master	E-28
515	Riser Blocks	E-29
515	Auxiliary Block Kit	E-29
515	High-Accuracy Check Master HMC-H	E-30
516	Inch Rectangular Gage Block Set	E-6
516	Metric Rectangular Gage Block Set	E-7-8
516	Micrometer Inspection Gage Block Sets	E-9
516	Rectangular Gage Block Accessories	E-14-16
516	Metric Square Gage Block Set	E-17
516	Inch Square Gage Block Set	E-18

SERIES No.	Description	Page
516	Square Gage Block Accessories	E-21-22
516	Maintenance Kit for Gage Block	E-23
516	Step Master	E-24
517	Black Granite Surface Plate	E-47
517	Steel Stands	E-47-48
517	Precision Granite Stands	F-109
518	Linear Height	D-51-52
518	QM-Height	D-53-54
519	Transfer Stands	F-106
519	Mu-checker (Analog or digital amplifier/display)	G-21
519	Mu-checker (Lever/Cartridge Probe Heads)	G-22
519	Mu-checker (EV-16A Counter)	G-23
521	Calibration Tester	F-88
523	Dial Snap Meters	B-65
523	Snap Meters	B-66
525	FORMTRACER Avant D3000/4000 Series	J-11
525	FORMTRACER Avant H3000 Series	J-12
525	FORMTRACER Extreme SV-C4500CNC	J-13
525	FORMTRACER Extreme CS-5000CNC/CS-H5000CNC	J-14
526	Bore Gages (Split Ball Type for Extra Small Holes)	C-31-33
527	Dial Depth Gage	D-73
527	Vernier Depth Gage	D-74-75
527	Depth Gage (Hook-end Type)	D-77
528	Knife Edge Straight Edge	E-35
530	Vernier Caliper (Standard Model)	D-9-10
531	Vernier Caliper with Thumb Grip	D-12
532	Vernier Caliper with Fine Adjustment	D-11
533	Vernier Caliper with Nib Style and Standard Jaws	D-22
534	Long Jaw Vernier Caliper	D-25-26
536	Offset Caliper (Vernier Type)	D-28
536	Offset Centerline Caliper (Vernier Type)	D-30
536	Point Caliper	D-32
536	Blade Type Caliper (Vernier Type)	D-34
536	ABSOLUTE Inside Caliper (Knife-edge/Inside Groove/Point Jaw Type)	D-37-38
536	Neck Caliper (Vernier Types)	D-39
536	Tube Thickness Caliper (Vernier Types)	D-40
536	Hook Type Vernier Caliper	D-41
536	Swivel Vernier Caliper	D-41
536	Scribing Caliper (Vernier Type)	D-44
539	Linear Scales AT103 (Standard Type)	H-13
539	PSU-200 Pulse Signal Interface Unit	H-13
539	Linear Scales AT113 (Slim Type)	H-14
539	Linear Scales AT211-A, AT211-B (Slim Spar, High Speed)	H-15
539	Linear Scales ABS AT715 (Slim Spar Type)	H-16
542	Gage Selector 3	A-27
542	EC Counter	A-27, F-24, G-11
542	EC Counter (Low-cost, Modular Type Display Unit)	F-24
542	Linear Gages (LG100 Standard Type Probe)	G-5-6
542	Linear Gages (LG200 Pencil Probe Style)	G-7
542	Linear Gages (High-accuracy/resolution Type)	G-9-10
542	Linear Gage Counter EC	G-11
542	Linear Gage Counter EH	G-12
542	Linear Gage Counter EJ-102N/NE	G-13-14
543	ABSOLUTE Digimatic Indicator, Back-lit Screen, ID-FNX (Digimatic S1 supported)	F-3-4
543	ABSOLUTE Digimatic Indicator, Standard, ID-CNX (Digimatic S1 supported)	F-5-6
543	ABSOLUTE Digimatic Indicator, IP66 Water-proof, ID-N/B	F-7-8
543	ABSOLUTE Digimatic Indicator ID-SX2	F-9-10
543	ABSOLUTE Digimatic Indicator, Peak-Value Hold, ID-CAX	F-13-14
543	ABSOLUTE Digimatic Indicator, for Bore Gage, ID-CGX	F-15-16
543	ABSOLUTE Digimatic Indicator, Calculation, ID-CRX	F-17-19
543	ABSOLUTE Digimatic Indicator, Signal Output Function, ID-CJX	F-20-21
543	High Accuracy, High Functionality, ID-H	F-22-23
544	Laser Scan Micrometer LSM-503S	G-35
544	Laser Scan Micrometer LSM-506S	G-35
544	Laser Scan Micrometer LSM-512S	G-36
544	Laser Scan Micrometer LSM-6902H	G-37
544	LSM-6200 Display Unit	G-38
544	LSM-5200 Display Unit	G-38
544	Laser Scan Micrometer Optional Accessories	G-39-41
544	Interface for LSM6200, 6902H	G-41
546	Contact Force Gage	F-99
547	ABSOLUTE Digimatic Depth Gage	D-82
547	Thickness Gages	F-89-90,93-94
550	ABSOLUTE Digimatic Caliper with Nib Style Jaws	D-20
551	ABSOLUTE Digimatic Caliper with Nib Style and Standard Jaws	D-21
552	ABSOLUTE Coolant Proof Carbon Fiber Caliper with Standard Jaws	D-13
552	ABSOLUTE Coolant Proof Carbon Fiber Caliper with Ceramic Jaws	D-14-15
552	ABSOLUTE Coolant Proof Carbon Fiber Caliper with Long Jaws	D-16
552	ABSOLUTE Coolant Proof Carbon Fiber Caliper with Interchangeable Jaws	D-17-19
565	Gage Block Comparator GBCD-250	E-25
565	Gage Block Comparator GBCD-100A	E-25
568	ABSOLUTE Boremat (ABSOLUTE Digimatic Snap-open Bore Gages)	C-13-16
570	ABSOLUTE Digimatic Height Gage with Ergonomic Base	D-57
570	ABSOLUTE Digimatic Height Gage (Standard Model)	D-58
571	ABSOLUTE Digimatic Depth Gage	D-71-72
571	Depth Gage (Hook-end Type)	D-76
571	Depth Gage (Point-contact Type)	D-78
571	Mini Depth Gage	D-79
572	SD ABSOLUTE Digimatic Scale Units	H-3-6
573	Offset Caliper (ABSOLUTE Digimatic Type)	D-27
573	Offset Centerline Caliper (ABSOLUTE Digimatic Type)	D-29
573	ABSOLUTE Back-Jaw Centerline Caliper	D-31
573	Point Caliper	D-32
573	Blade Type Caliper (ABSOLUTE Digimatic Type)	D-33
573	ABSOLUTE Inside Caliper (Knife-edge/Inside Groove/Point Jaw Type)	D-35-36
573	Neck Caliper (ABSOLUTE Digimatic)	D-39
573	Tube Thickness Caliper (ABSOLUTE Digimatic)	D-40
573	ABSOLUTE Low Force Caliper	D-42
573	ABSOLUTE Snap Caliper	D-43
573	Scribing Caliper (ABSOLUTE Digimatic)	D-44
575	ABSOLUTE Digimatic Indicator, Slim, Economical, ID-U	F-11-12
575	Linear Gages (Digimatic output Type)	G-8
579	Linear Scales ST36 High Accuracy/Resolution Type	H-19
579	Linear Scales ST46-EZA Compact, Glass/Metal-tape Types	H-20
579	Linear Scales ABS ST700 Contamination Resistant, 6 m max.	H-21
579	Linear Scales ABS ST1300 Ultra-high Resolution, 12 m max.	H-22
700 - 799		
700	QUICKmini Thickness Gage	B-68
800 - 899		
810	HM-210/220 Micro Vickers Hardness Testing	K-4-5
810	HV-110/120 Vickers Hardness Testing	K-6-7
810	HR-530/530L Rockwell Hardness Testing	K-10
810	HR-600 Rockwell Hardness Testing	K-13
810	Hardmatic HH-V400 Impact Hardness Testing	K-14
811	Hardmatic HH-300 Rubber and Plastics Hardness Testing	K-15
900 - 999		
930	Precision Vices	E-36
950	Zero-It	E-35
950	Zero-Setter	E-35
950	Digital Protractor	E-42
950	Pitch Gages	E-43
968	Protractor	E-39
982	Multiplexer - MIG-1,2,4,8USB	A-25
982	Digital Hand Tachometers	E-34

Alphabetical Index

Description	SERIES No.	Page
A		
ABSOLUTE Back-Jaw Centerline Caliper	573	D-31
ABSOLUTE Borematic	568	C-13, 15
ABSOLUTE Coolant Proof Caliper	500	D-3
ABSOLUTE Coolant Proof Carbon Fiber Caliper	552	D-13, 16-17
ABSOLUTE Digimatic Caliper	500	D-5-6, 20-21
ABSOLUTE Digimatic Depth Gage	547	D-82
ABSOLUTE Digimatic Depth Gage	571	D-71-72
ABSOLUTE Digimatic Height Gage	570	D-57-58
ABSOLUTE Digimatic Indicator ID-CAX	543	F-13
ABSOLUTE Digimatic Indicator ID-CGX	543	F-15
ABSOLUTE Digimatic Indicator ID-CJX	543	F-20-21
ABSOLUTE Digimatic Indicator ID-CNX	543	F-5
ABSOLUTE Digimatic Indicator ID-CRX	543	F-17
ABSOLUTE Digimatic Indicator ID-N/B	543	F-7
ABSOLUTE Digimatic Indicator ID-SX2	543	F-9
ABSOLUTE Digimatic Indicator ID-U	575	F-11
ABSOLUTE Digimatic Long Range Caliper	500	D-7
ABSOLUTE Digimatic Micrometers B-12	227	B-12
ABSOLUTE Inside Caliper	536	D-37
ABSOLUTE Inside Caliper	573	D-35
ABSOLUTE Low Force Caliper	573	D-42
ABSOLUTE Snap Caliper	573	D-43
Auxiliary Block Kit	515	E-29
B		
Back Plunger Type Dial Indicators	1	F-33
Back Plunger Type Dial Indicators	2	F-58
Bench Center	967	E-46
Bevel Protractor	187	E-41
Black Granite Surface Plate	517	E-47
Blade Micrometers	122	B-57
Blade Micrometers	422	B-55
Blade Type Caliper	536	D-34
Blade Type Caliper	573	D-33
Bore Gage and Indicator Calibration	516	C-58
Bore Gage Checker	515	C-57
Bore Gages	511	C-31, 33, 35, 37, 39, 41, 43, 44, 45, 49
Bore Gages	526	C-33
Bore Gage Stand	215	C-34
C		
Cable Connection Guide		A-29
Caliper Type Micrometers	143	B-30
Caliper Type Micrometers	343	B-29
Can Seam Micrometers	147	B-58
CERA Caliper Checker	515	D-64
CERA Inside Micro Checker	515	C-30
Ceraston		E-23
Color-Coded Ratchets and Speeder Covers		B-75
Contact Force Gage	546	F-99
Contact points, Stems and Holders		F-84-85
Coolant Proof Micrometers	293	B-7-8
Crimp Height Micrometers	112	B-60
Crimp Height Micrometers	142	B-60
Crimp Height Micrometers	342	B-59
Cylindrical Standards for Screw Thread Micrometers	167	B-73

Description	SERIES No.	Page
D		
Defect Detection		M-12
Depth Gage Attachment		D-81
Depth Gage	527	D-77
Depth Gage	571	D-76, 78
Depth Micro Checker	515	D-70
Depth Micrometer	128	D-69
Depth Micrometer	329	D-67-68
Depth Micrometer	129	D-67-68
Dial Caliper	505	D-8
Dial Depth Gage	7	D-83
Dial Depth Gage	527	D-73
Dial Gage Stands	7	F-104-105
Dial Height Gage	192	D-61
Dial Indicator Repair Tools		F-74
Dial Indicators		F-25?
Dial Snap Meters	523	B-65
Dial Test Indicator	513	F-76-78, 80
Digimatic Gage/PC Data Input Device		A-23
Digimatic Height Gage	192	D-55-56
Digimatic Holtest	468	C-3, 5
Digimatic Indicator ID-H	543	F-22-23
Digimatic Micrometer Heads	164	B-82-83
Digimatic Micrometer Heads	350	B-82-83
Digimatic Outside Micrometers	293	B-9-10
Digital/Dial Snap Gage	201	F-100
Digital Hand Tachometers	982	E-34
Digital Height Master	515	E-27
Digital Protractor	950	E-42
Digital Universal Protractor	187	E-40
Digit Outside Micrometers	193	B-21-22
Disc Micrometers	169	B-39
Disc Micrometers	223	B-36
Disc Micrometers	123	B-35-36
Disc Micrometers	323	B-34
Disc Micrometers	369	B-38
Disc Micrometers	227	B-38
Disc Micrometers	369	B-37
DP-1VA Data Collection		A-26
E		
EC Counter	542	A-27, F-24
Edge & Center Finders		E-33
Extension Bases		D-80
Extension Rod		C-51
External Measurement	209	F-98
External Tube Thickness Measurement	209	F-96
F		
Fit Transmitter/Connecting Unit		A-18
G		
Gage Block Comparator GBCD-100A	565	E-25
Gage Block Comparator GBCD-250	565	E-25
Gage Management		A-9
Gear Tooth Micrometers	124	B-42
Gear Tooth Micrometers	324	B-41
Groove Micrometers	146	B-67

Description	SERIES No.	Page
H		
Height Gage		D-62-63
Height Master	515	E-26
High-Accuracy Check Master HMC-H	515	E-30
High-performance ABS Digimatic Indicator ID-FNX	543	F-3
High-Precision Square	311	E-33
High-Speed and High-accuracy Digimatic Micrometer QuantuMike		B-5
Holtest - Three-point/Two-point Bore Micrometers	368	C-7, C-9
Holtest (Type II) - Three-Point Bore Micrometers	368	C-11
Hook Type Vernier Caliper	536	D-41
Hub Micrometers	147	B-58
I		
i-Checker IC2000	170	F-87
Inch Rectangular Gage Block Set - Inch Block Set, Thin Block Set, Long Block Set, Wear Block Set	516	E-6
Inch Square Gage Block Set - Inch Block Set, Long Block Set, Wear Block Set	516	E-18
Indicating Micrometers	510	B-63
Indicator Type Micrometers	107	B-62
Individual Inch Rectangular Gage Block		E-12
Individual Inch Square Gage Blocks		E-20
Individual Metric Rectangular Gage Block		E-10
Individual Metric Square Gage Block		E-19
Inside Micrometers - Caliper Type	141	C-26
Inside Micrometers - Caliper Type	145	C-27
Inside Micrometers - Caliper Type	345	C-29
Interchangeable Back Covers - Optional Accessories for Digimatic and Dial Indicators		F-69
Internal Measurement	209	F-97
Internal Tube Thickness Measurement	209	F-95
K		
Knife Edge Straight Edge	528	E-35
L		
Limit Micrometers	113	B-28
Linear Height - High-performance 2D Measurement System	518	D-51
Long Jaw Vernier Caliper	534	D-25-26
Lubricant for Measuring Tools		B-75
M		
Made-to-order Block & Reference		E-24
Magnetic Stands F-101		F-101
Maintenance Kit for Gage Blocks	516	E-23
Measurement Data Collection Software		A-24
USB-ITPAK V3.0 A-11		
Measurement Data Input Tool		
Input Tool SERIES IT-020U/IT-007R A-24		
Metric Dial Indicators — ANSI / AGD Type		F-55
Metric Rectangular Gage Block Set - 1mm Base Block Set	516	E-7
Metric Rectangular Gage Block Set - Long Block Set, Wear Block Set	516	E-8
Metric Square Gage Block Set - Metric Block Set, Long Block Set, Wear Block Set	516	E-17
Micro Jack	7	B-121
Micrometer Head Mounting Fixtures		B-122-123
Micrometer Heads - Differential Screw Thread Translator	110	B-103
SERIES 110 — Differential Screw Thread Translator		
(Extra-Fine Feed) Type B-103		
Micrometer Heads - Fine Spindle Feed of 0.1 mm/rev	148	B-100-101
Micrometer Heads - Fine Spindle Feed of 0.25 mm/rev	148	B-102
Micrometer Heads - Locking-screw Type	148	B-96-97, B-99
Micrometer Heads - Short Thimble with Multiple Diameter Options	148	B-87, B-89
Micrometer Heads - Small Standard Type	148	B-90-91
Micrometer Heads - Small Thimble Diameter Standard Type	148	B-93, B-95
Micrometer Heads - Small/Ultra-small Type	148	B-85-86
Micrometer Heads - Small Standard Type	149	B-105
Micrometer Heads - Medium-sized Standard Type	150	B-107-108, B-110
Micrometer Heads - Medium-sized Standard Type	151	B-111-112, B-114
Micrometer Heads - Large Thimble Type	152	B-112
Micrometer Heads - Quick Spindle Feed of 1 mm/rev	152	B-116
Micrometer Heads - XY-Stage Type	152	B-119
Micrometer Heads - High Accuracy and Resolution	153	B-120
Micrometer Heads - Non-rotating Spindle Type	153	B-115
Micrometer Heads - Long Stroke Non-rotating Spindle	197	B-120
Micrometer Heads - Digit Counter Type	250	B-121
Micrometer Inspection Gage Block Sets	516	E-9
Micrometer Stands	156	B-76
Mini Depth Gage	571	D-79
Modular Shaft Measuring Kits		E-45
Mounting Fixtures		F-110
N		
Neck Caliper - ABSOLUTE Digimatic and Vernier Types	573, 536	D-39
O		
Offset Caliper - Vernier Type	536	D-28
Offset Caliper - ABSOLUTE Digimatic Type	573	D-27
Offset Centerline Caliper - Vernier Type	536	D-30
Offset Centerline Caliper - ABSOLUTE Digimatic Type	573	D-29
Optical Flats	158	B-70
Optical Parallels & Optical Flats	157, 158	B-70
Optional Accessories for Calipers D-45		D-45
Optional Accessories for Digimatic and Dial Indicators and Linear Gages		F-63, F-67
Optional Accessories for Pocket Type Dial Test Indicators		F-86
Outside Micrometers	102	B-16
Outside Micrometers	103	B-18, B-20
Outside Micrometers with Interchangeable Anvils	104	B-23-24
Outside Micrometers with Anvil Extension Collars	105	B-25-26
Outside Micrometers with Interchangeable Anvils	340	B-14-15
Outside Micrometers - Non-rotating Spindle Type	406	B-13
P		
Paper Thickness Micrometers - Non-rotating Spindle Type	169	B-40
Pitch Gages	188, 950	E-43
Pocket Type Dial Test Indicator	513	F-81, F-83
Point Caliper	573, 536	D-32
Point Micrometers	112, 142	B-52
Point Micrometers	342	B-51
Precision Granite Stands (with black granite bases)	517	F-109
Precision Lead Screws		B-124
Precision Vices	930	E-36
Process Analyzer A-7		A-7
Process Manager A-8		A-8
Product Licensing A-10		A-10
Protractor	968	E-39

Alphabetical Index

Description	SERIES No.	Page
Q		
QM-Fit		M-13
QM-Height	518	D-53
QS-L/AFC		M-15
Quick Image		M-14
Quickmike	293	B-11
QUICKmini Thickness Gage	700	B-68
QV ACCEL		M-5
QV Active		M-3
QV APEX Pro/QV HYPER Pro		M-4
QV HYBRID TYPE4		M-8
QVPAK		M-10
QV TP Active/QV TP Pro		M-7
R		
Radius Gages	186	E-43
Radius Gages-Sets	186	E-44
Ratchet Thimble Micrometer - Outside Micrometers	102	B-17
Real-Time		A-5
Recommended Indicators (Accessories for Bore Gages)		C-52
Rectangular Gage Block Accessories		E-16
Rectangular Gage Block Accessories	516	E-15
Rectangular Gage Block Accessories (Over 100mm)	516	E-14
Rectangular Gage Block with CTE		E-13
Riser Blocks	515	E-29
S		
Cable Connection Guide		A-29
Caliper Type Micrometers	143	B-30
Caliper Type Micrometers	343	B-29
Can Seam Micrometers	147	B-58
CERA Caliper Checker	515	D-64
CERA Inside Micro Checker	515	C-30
Ceraston		E-23
Color-Coded Ratchets and Speeder Covers		B-75
Contact Force Gage	546	F-99
Contact points, Stems and Holders		F-84-85
Coolant Proof Micrometers	293	B-7-8
Crimp Height Micrometers	112	B-60
Crimp Height Micrometers	142	B-60
Crimp Height Micrometers	342	B-59
Cylindrical Standards for Screw Thread Micrometers	167	B-73
T		
Telescoping Gage Set	155	B-69
Thickness/Feeler Gages	184	E-39
Thickness Gages	7	F-91
Thickness Gages	547	F-89, F-93
Tool Kits		B-77
Tube Micrometers	395, 115, 295	B-46-48
Tube Thickness Caliper - ABSOLUTE Digimatic and Vernier Types	573, 536	D-40
Tubular Inside Micrometers - Single-Rod Type	133	C-17
Tubular Inside Micrometers - Extension-Rod Type	137, 337	C-19
Tubular Inside Micrometers - Extension-Rod Type (Main Unit)		C-21
Tubular Inside Micrometers - Extension-pipe Type	139, 140	C-23
Tubular Inside Micrometers - Extension-Pipe Type (Main Unit)	139	C-25
Tubular Inside Micrometers - Extension-pipe Type	139	C-22

Description	SERIES No.	Page
U		
Ultra-high Accuracy Digimatic Micrometer	293	B-3
ULTRA QV		M-6
UMAP Vision System TYPE2		M-9
Uni-Mike - Interchangeable Anvil Type	317, 117	B-61
Universal Bevel Protractor	187	E-41
Universal Height Master - Use in Vertical and Horizontal Orientation	515	E-28
USB Multiplexers		A-25
U-WAVE Bluetooth®		A-16
U-WAVE fit		A-16
U-WAVE-T		A-19
U-WAVE-T dedicated connection cable		A-19
U-WAVE-TM/TC (U-WAVE fit)		A-17
U-WAVE Wireless		A-15
V		
V-Anvil Micrometers - 3 Flutes and 5 Flutes	114	B-54
V-Anvil Micrometers - 3 Flutes	314	B-53
Vernier Caliper - with Nib Style Jaws and Fine Adjustment	160	D-23
Vernier Caliper - Standard Model	530	D-9-10
Vernier Caliper - with Thumb Grip	531	D-12
Vernier Caliper - with Fine Adjustment	532	D-11
Vernier Caliper - with Nib Style and Standard Jaws	533	D-22
Vernier Depth Gage	527	D-74
Vernier Height Gage - Standard Height Gage with Adjustable Main Scale	514, 506	D-59
W		
Wireless Measurement Data Communication System - U-WAVE-TMB/TCB (U-WAVE fit Bluetooth®)		A-21
Z		
Zero-It	950	E-35
Zero-Setter	950	E-35

In the Spirit of Mitutoyo

To become a complete man, one must acquire Wisdom, Benevolence and Valor. With Wisdom only, one tends to be cold. Benevolence alone makes one weaker. With valor only, one may reach beyond his capabilities. When the three qualities are combined, however, one will become a complete man. Similarly, success in enterprise lies in the knowledge of Heaven, Earth and Man. Business will succeed only when these factors, "heavensent" chances, natural opportunities, and harmony of man are present. Without even one factor, success is remote. In Buddhism, Butsu (Buddha), Po (Doctrine) and So (Priest) are three principle treasures for its promotion of the teaching. In Christianity, God, Bible and Minister.

The word MITUTOYO signifies three abundances. "Mitsu" means three, while "Toyo" stands for a state of abundance. The name MITUTOYO was selected, with a sincere wish to see more complete men, to create a prosperous enterprise and to introduce righteous religion to all, along with the lasting wish for a peaceful world and fulfillment of meaningful life.

Mitutoyo America Corporation

965 Corporate Blvd.
Aurora, Illinois 60502
Phone: (630) 820-9666
Email: info@mitutoyo.com
www.mitutoyo.com

For customer support call toll free:
1-888-MITUTOYO (1-888-648-8869)

© 2026 Mitutoyo America Corporation

Distributed by: