Mitutoyo

High-Performance Height Gage
QM-Height Series

Small Tool Instruments and Data Management

• Design registered in Japan, EU and China

Catalog No. E12027-US

Mitutoyo

High-Performance Height Gage
QM-Height Series

NEW Products

- **Best-in-class accuracy ±(2.4+2.1L/600) µm**
- **Built-in pneumatic flotation system enables smooth movement over a surface plate. Models without air suspension feature are also available.**
- **Simple-to-use control panel enables most measurements to be made with a single keystroke.**
- **Battery life of 1200 hours in continuous use with four AA batteries.**
  (Four commercially available nickel hydride batteries can also be used.)
- **Optional U-WAVE-T measurement data communication system outputs measurement data directly to Excel or SPC software.**
  The USB communication driver can be downloaded from the Mitutoyo website. (Communication software is separately required.)
  https://www.mitutoyo.co.jp/eng/contact/products/usb/index.html

GO/±NG judgment by LED and display symbols

- LEDs indicate tolerance judgment status – green for GO, red for +NG, and orange for -NG. Status is also indicated by corresponding symbols appearing on the display.

Intuitive buttons and layout

- The symbols are for frequently used keys.
- Cross-keys provide better operability.

Inside/outside diameters, maximum/minimum heights and displacement can be measured using a standard probe

- Besides height measurement, Mitutoyo's proprietary mechanism and firmware enables scanning measurement of inside/outside diameters, maximum/minimum heights, and height differences.

QM-Height measures height, height difference (step), inside/outside widths, inside/outside diameters, circle pitch, free-form surface maximum/minimum heights and height difference by scanning measurement*.
Two subdisplay modes display the value from the previous measurements or the value from the zero/origin point. Origin points can also be set from hole centers.

*Scanning measurement stroke is approx. 1 mm above and below from the start point of measurement.

ABSOLUTE encoder maintains the origin

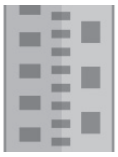

- The electromagnetic induction type ABSOLUTE encoder maintains the origin. There is no need to set the origin after turning on the power.
  (Except when there is a considerable environmental change.)

Digimatic and USB outputs

- Digimatic and USB ports are provided as standard. Using the **U-WAVE-T** measurement data wireless communication system enables instant transmission of measurement data to a PC via wireless communication which reduces manual input errors and improves data reliability and operational efficiency.

To install **U-WAVE-T**, separately purchase the optional mounting plate (**02AZE990**).

Power supply

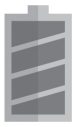

- Four alkaline AA/LR6 batteries (standard accessories)
- Also operates on four NiMH AA rechargeable batteries
- AC adapter (packages available with or without AC adapter)
- 1200 hours of battery life in continuous use

Probe elevation wheel

- Used for measurement, allowing fine or coarse adjustment of probe height.

Air-suspension feature

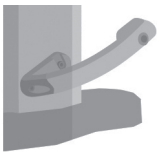

- Pressing a button on the grip activates the internal air pump. The base rises on a cushion of air and is able to be moved smoothly over the surface plate.

Note: Measurements should not be made while this function is in use as it will cause measurement error.

Measurement examples

Height measurement

ID measurement

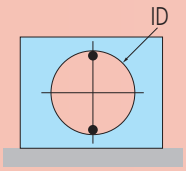

Runout measurement

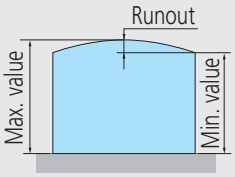

After scanning the surface, the runout will be shown in the display as (Max. value - Min. value)

Height difference measurement (1)

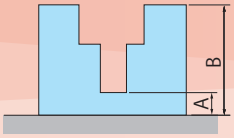

Height A and height B from the surface plate will be displayed.

Height A

Height B

Height difference measurement (2)

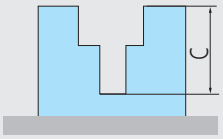

After measuring heights A and B, the height difference C between them can be shown in the lower row of the display.

Mitutoyo

Centralized Data Management

Eliminate manual data-entry errors, and significantly improve efficiency

24"/600 mm stroke type
Without air-suspension: **518-253**
With air-suspension: **518-257**

• The USB communication driver can be downloaded from the Mitutoyo website.
https://www.mitutoyo.co.jp/eng/

USB output

Note: Use a commercially available USB micro-cable (for communication use only).

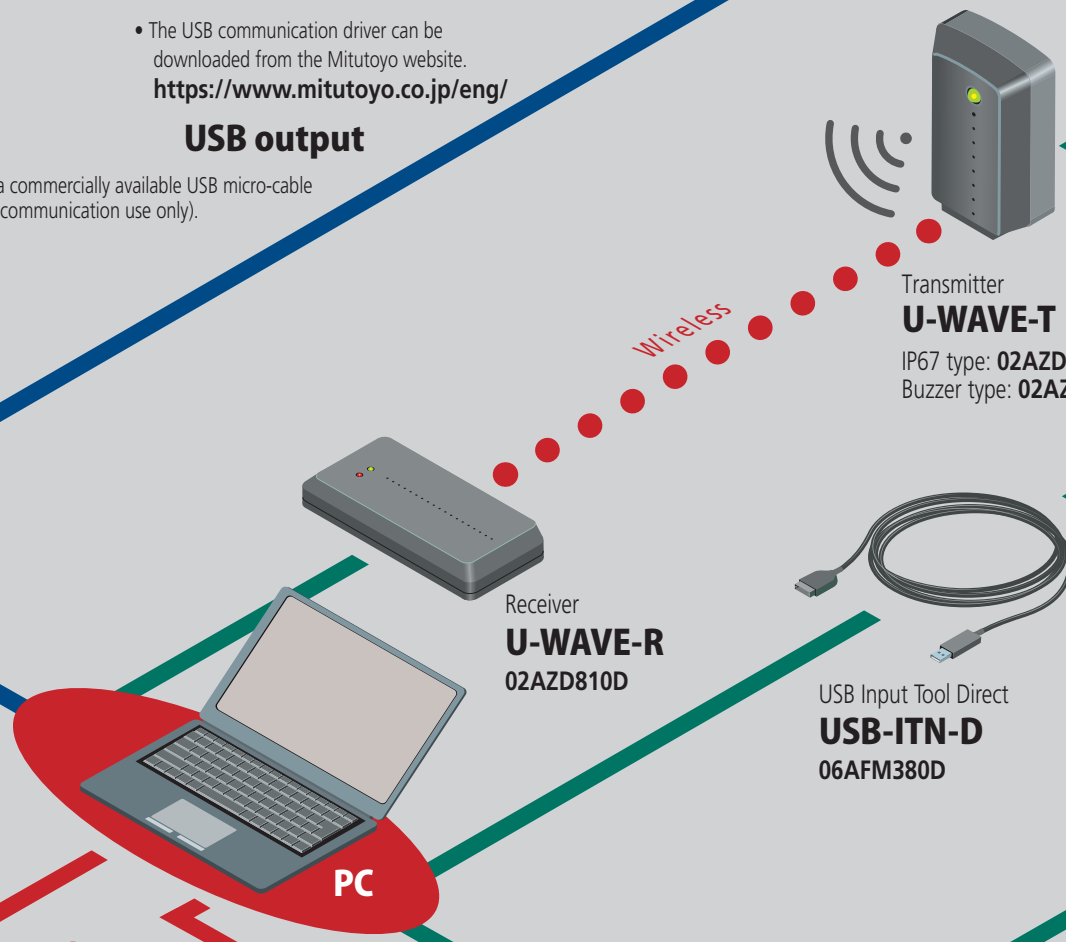

Measurement Data Network System
MeasurLink®

MeasurLink® is an IoT platform for quality management that realizes "Visualization of Quality" by enabling real-time data collection from the networked Digimatic gages and global control and analysis.

MeasurLink® is a registered trademark of Mitutoyo Corporation in Japan and Mitutoyo America Corporation in the United States.

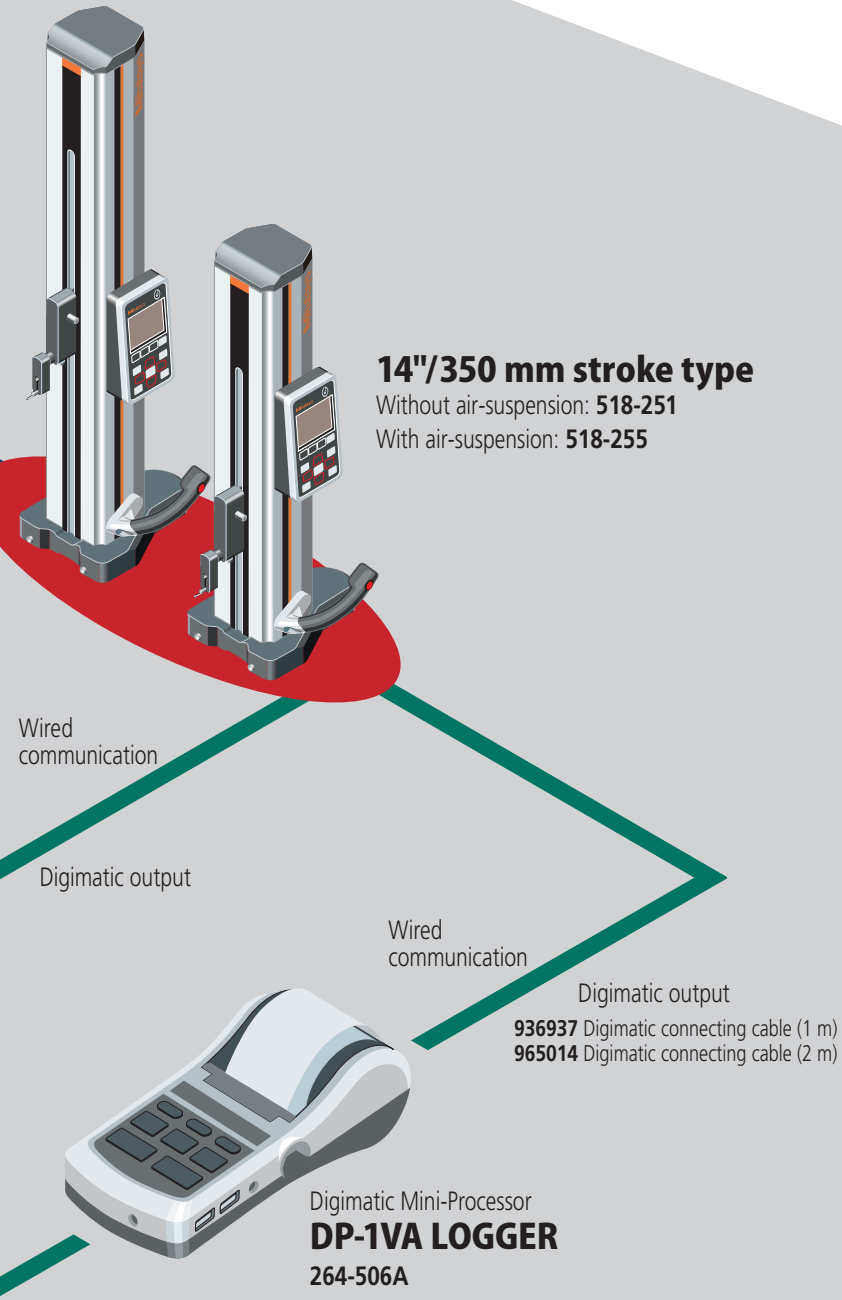

Data management options

Order No.	Item name
Portable printer/processor equipped with Data Logger	
264-506A	**DP-1VA LOGGER**
936937	Digimatic connecting cable (1 m) - Connects QM to DP-1VA
965014	Digimatic connecting cable (2 m) - Connects QM to DP-1VA
06AFZ050	USB cable (A-microB) - output from DP-1VA to PC
Measurement Data Input Unit	
06AFM380D	USB Input Tool Direct **USB-ITN-D**
Measurement data wireless communication system	
02AZD730G	**U-WAVE-T** (Transmission unit) (IP67 type)
02AZD880G	**U-WAVE-T** (Transmission unit) (Buzzer type)
02AZD790D	**U-WAVE-T** dedicated cable (Standard use)
02AZE140D	**U-WAVE-T** dedicated cable (For foot switch)
02AZD810D	**U-WAVE-R** receiver
02AZE990	**U-WAVE** mounting plate
Measurement data collection software for Excel **USB-IT PAK V3**	
Measurement data network system **MeasurLink**	

Contact points for a wide range of measurements (Refer to page 8.)

No.	Order No.	Item description
	Depth probe	
(1)	**12AAC072**	Depth probe
	Interchangeable contact points for ø5 stepped probe	
(2)	**957261**	ø2 mm ball (coaxial type)
(3)	**957262**	ø3 mm ball (coaxial type)
(4)	**957263**	ø4 mm ball (coaxial type)
(5)	**957264**	ø14 mm disk
(6)	**957265**	ø20 mm disk
(7)	**12AAA788**	ø4 mm ball (eccentric type)
(8)	**12AAA789**	ø6 mm ball (eccentric type)
	Special holder	
(9)	**12AAA792**	Holder for dial indicator
(10)	**12AAA793**	Holder (Long)
	AC Adapter	
	06AFZ950JA	AD620JA for Japan/U.S.
	Others	
	05HZA144	.25" x .5" adapter (clamp underneath is required)
	901385	Clamp (for .25" x .5" adapter)
	05HZA143	9x9 mm adapter (clamp underneath is required)
	05GZA033	Clamp (for 9x9 mm adapter)
	05HZA173	Scriber*

Note: A gage block may be required for the zero-setting depending on the probe or contact point to be used.
* Used for measurements, cannot be used for scribing.

Mitutoyo

Contact points for a wide range of measurements

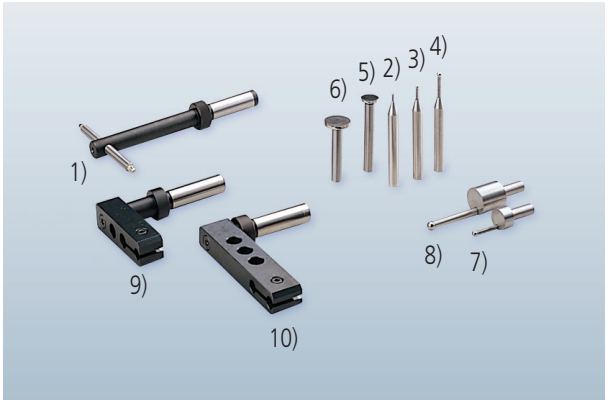

1) **12AAC072**
Depth probe

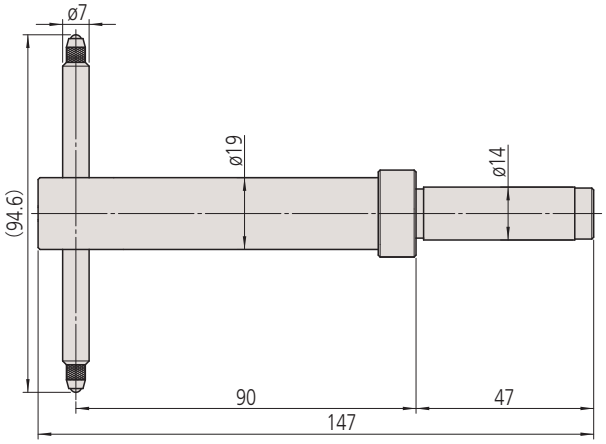

2) **957261**
ø2 mm ball (coaxial type)

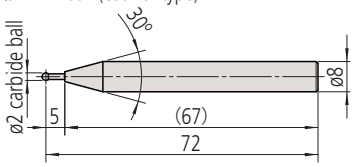

3) **957262**
ø3 mm ball (coaxial type)

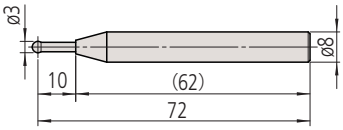

4) **957263**
ø4 mm ball (coaxial type)

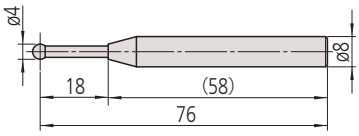

5) **957264**
ø14 mm disk

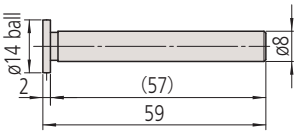

6) **957265**
ø20 mm disk

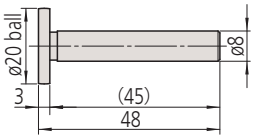

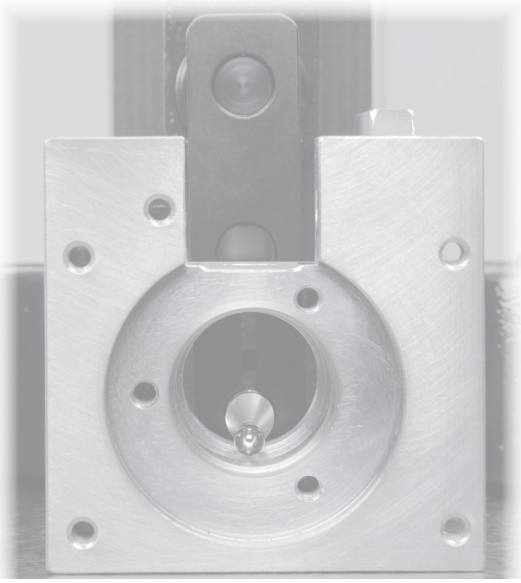

7) **12AAA788**
ø4 mm ball (eccentric type)

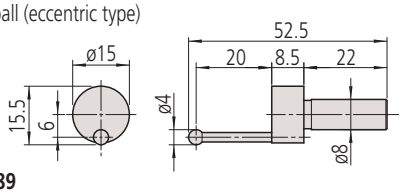

8) **12AAA789**
ø6 mm ball (eccentric type)

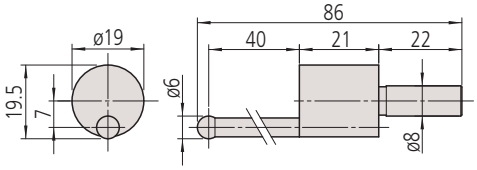

9) **12AAA792**
Holder for dial indicator

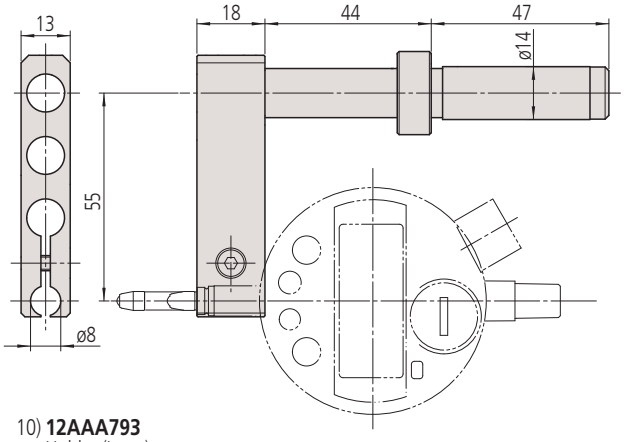

10) **12AAA793**
Holder (Long)

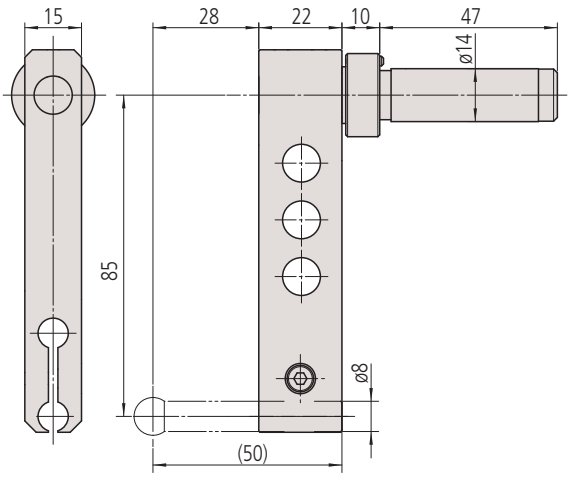

Specifications

Order No.	Package w/AC adatper	64PKA094D	64PKA095D	64PKA129D	64PKA130D
	Inch/Metric Main unit	518-251	518-253	518-255	518-257
Measuring range (Stroke)		(14 in / 350 mm)	(24 in / 600 mm)	(14 in / 350 mm)	(24 in / 600 mm)
Resolution	Inch/Metric	0.001/0.005 mm 0.00005/0.0001/0.0002 in			
Accuracy at 20 ˚C	Measurement*1	± (2.4 + 2.1L/600) µm			
	Repeatability*1	2σ ≤ 1.8 µm			
Perpendicularity*2 (20 ˚C)		7 µm	12 µm	7 µm	12 µm
Guiding method		Roller bearing			
Drive method		Manual (wheel)			
Measurement principle		Electromagnetic induction absolute encoder			
Measuring force		1.5±0.5 N			
Data output ports		Digimatic / Digimatic 2 / USB*3			
Air-suspension feature		Not included		Included (for positioning only)*4	
Power supply		Alkaline AA /LR6 batteries x 4 (standard accessories) / AC adapter (optional accessory)*5 / Supports NiMH (HR6) rechargeable batteries x 4			
Battery life guidelines*6		Approx. 1200 hours (without using the air-suspension feature)			
		Approx. 90 hours (when using the air-suspension feature)			
Mass		25 kg	29 kg	26 kg	30 kg
Size (mm)		Stroke 350 mm type: 280(W) x 273(D) x 784(H) mm Stroke 600 mm type: 280(W) x 273(D) x 1016(H) mm			
Operating temperature range (recommended)		0 to 40 ˚C (10 to 30 ˚C)			
Operating humidity range		20 to 80 % RH (non-condensing)			
Storage temperature range		-10 ˚C to 50 ˚C			
Storage humidity range		5 to 90 % RH (non-condensing)			

*1 The indication accuracy and repeatability represent the values obtained from the height measurement of a flat surface using the standard holder with ø5 ball contact point. In the case of diameter, minimum (maximum) value, circle pitch or difference measurement, measuring errors may be larger than the accuracy ratings listed in the table due to variations in measuring force during a scanning measurement, which differs from height measurement.
*2 Indicates the value obtained from the measurement of a straight surface placed perpendicular to the the base reference surface using the Lever Head (MLH-521) and Mu-checker (M-551).
*3 Requires special communication driver and software. Consult your local Mitutoyo Sales Office for details.
These can be downloaded from the Mitutoyo web site. https://www.mitutoyo.co.jp/eng/contact/products/usb/index.html
*4 When using a model with the air-suspension feature, it is advisable to use a JIS 1 class, or higher, surface plate. Using on surfaces with scratches or unevenness may prevent the system operating to the specified performance.
*5 The AC adapter cannot be used to recharge rechargeable batteries.
*6 Battery life depends on the operating conditions. In particular, it is more economical to use the optional AC adapter to power the instrument if the application requires prolonged use of the air-suspension feature.

64PKA130D
518-257

64PKA129D
518-255

Dimensions

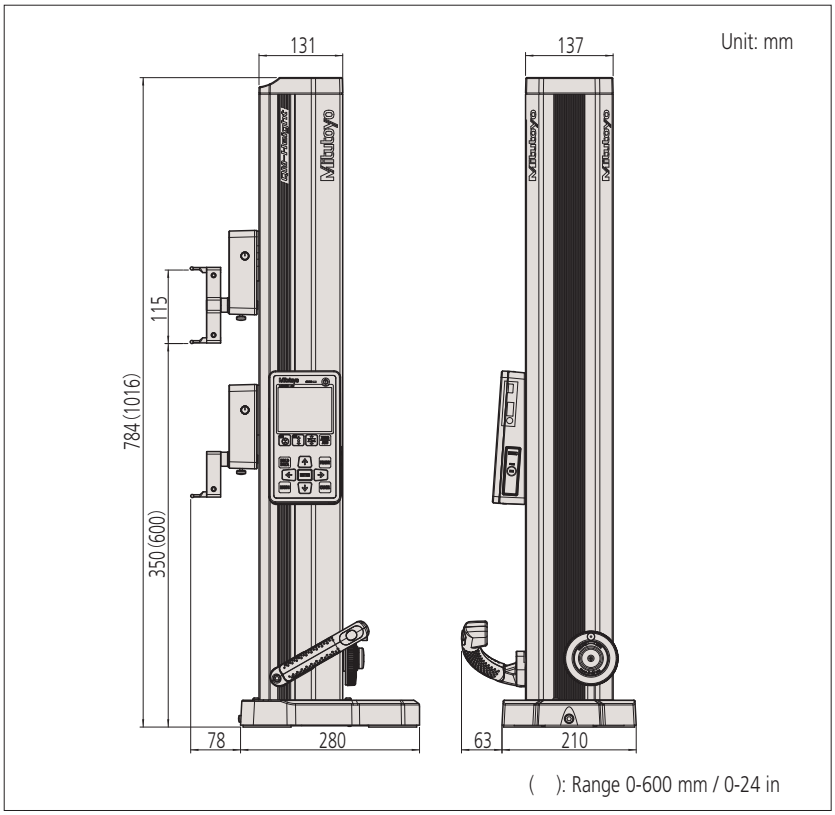

Standard accessories

Order No.	Item
12AAA715	Probe diameter calibration block
05HZA148	ø5 mm stepped probe
—	Alkaline batteries x 4 (AA/LR6)

Coordinate Measuring Machines

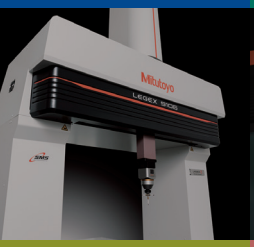

Vision Measuring Systems

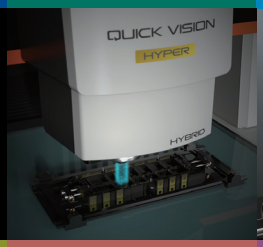

Form Measurement

Optical Measuring

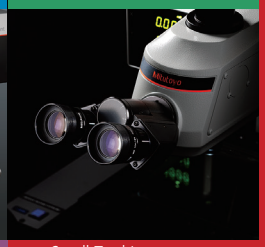

Sensor Systems

Test Equipment

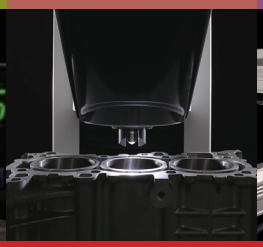

Digital Scale and DRO Systems

Small Tool Instruments and Data Management

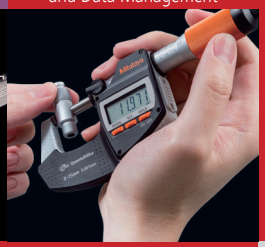

Whatever your challenges are, Mitutoyo supports you from start to finish.

Mitutoyo is not only a manufacturer of top quality measuring products but one that also offers qualified support for the lifetime of the equipment, backed up by comprehensive services that ensure your staff can make the very best use of the investment.

Apart from the basics of calibration and repair, Mitutoyo offers product and metrology training, as well as IT support for the sophisticated software used in modern measuring technology. We can also design, build, test and deliver measuring solutions and even, if deemed cost-effective, take your critical measurement challenges in-house on a sub-contract basis.

My.Mitutoyo

Mitutoyo End User Portal
Search for products, request a product quote, take online metrology courses, and much more. My.Mitutoyo.com puts everything Mitutoyo directly in front of you.

Find additional product literature and our product catalog

www.mitutoyo.com

Note: All information regarding our products, and in particular the illustrations, drawings, dimensional and performance data contained in this printed matter as well as other technical data are to be regarded as approximate average values. We therefore reserve the right to make changes to the corresponding designs. The stated standards, similar technical regulations, descriptions and illustrations of the products were valid at the time of printing. In addition, the latest applicable version of our General Trading Conditions will apply. Only quotations submitted by ourselves may be regarded as definitive. Specifications are subject to change without notice.

Mitutoyo products are subject to US Export Administration Regulations (EAR). Re-export or relocation of our products may require prior approval by an appropriate governing authority.

Trademarks and Registrations
Designations used by companies to distinguish their products are often claimed as trademarks. In all instances where Mitutoyo America Corporation is aware of a claim, the product names appear in initial capital or all capital letters. The appropriate companies should be contacted for more complete trademark and registration information.

Mitutoyo America Corporation
www.mitutoyo.com
One Number to Serve You Better
1-888-MITUTOYO (1-888-648-8869)

M³ Solution Centers:
Aurora, Illinois (Headquarters)
Boston, Massachusetts
Charlotte, North Carolina
Cincinnati, Ohio
Detroit, Michigan
Lakeland, Florida
Los Angeles, California
Seattle, Washington
Houston, Texas

© 2026 Mitutoyo America Corporation

0326 • Printed in USA • March 2026