Suspended Ceiling Details for AJS® or BCI® Joists

Filler block - one side attachment

- Install a 2x6 solid sawn filler block with 2 rows of 2 – 2½" (8d) nails, clinched;
- Nail the ceiling attachment to the filler block with at least 2 – 3½" (16d) nails;
- The maximum weight that the joist can support at each location is 250 lbs (Factored load);
- Minimum bracket spacing along the bottom flange should be 6'-0".

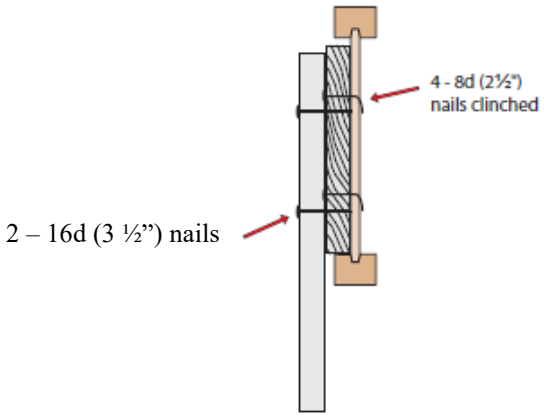

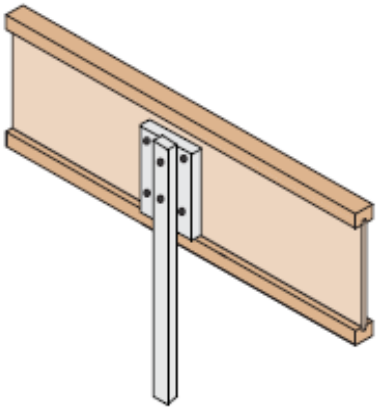

I-Joist Flange Brackets

- The maximum weight that the joist can support at each bracket location is 500 lbs (Factored load). Please refer to the bracket supplier for proper bracket resistance;
- Minimum bracket spacing along the bottom flange should be 6'-0".

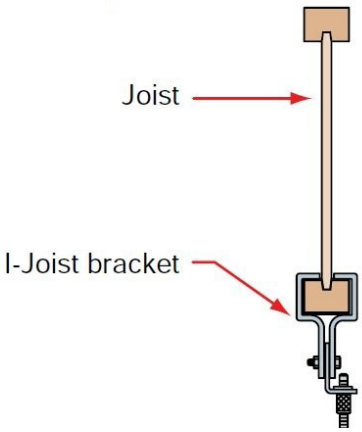

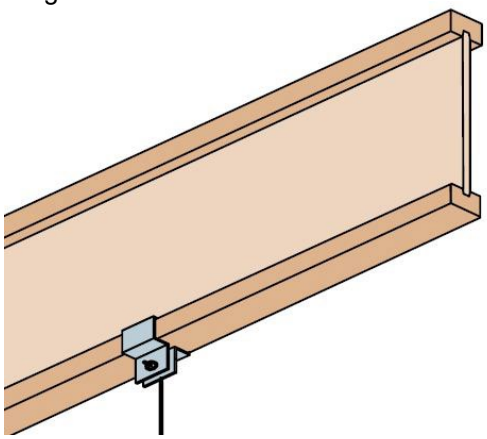

BCI® / AJS® Flange – Lag & Wood Screw Provisions

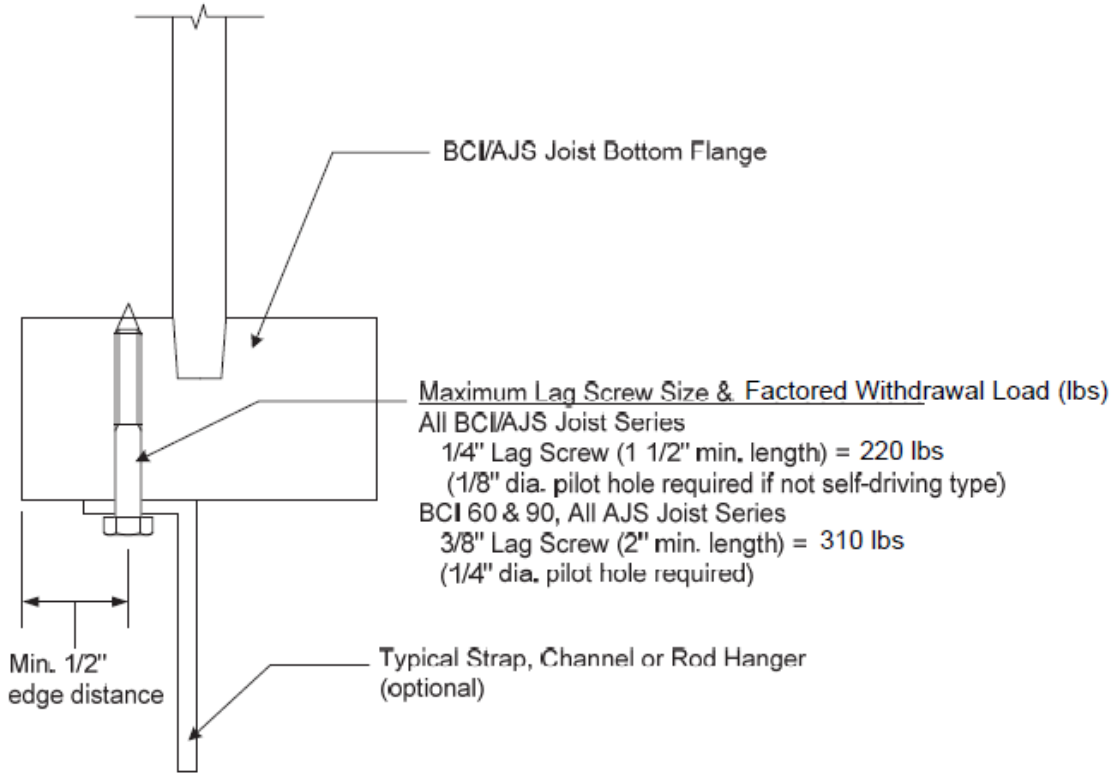

Notes:

1) BCI/AJS joist shall be designed with additional loading from connectors.
2) Lag screws may be installed no closer than 6" on-center. Thread length = 1" for BCI series and 1.125" AJS series
3) Gypsum board may be installed between connector and flange.
4) Lag screws may installed centered about flange width (into flange rout) without any reduction in load or capacity.
5) Wood Screw Provisions:
   - No pilot hole required for wood screws with diameters less than ¼" (#14 & smaller).
   - Withdrawal capacity for wood screws of #7 and larger = 145 lbs (based upon threads installed through entire flange).
   - Closest spacing: #7 = 3", #8 = 3", #10 = 4". #12 = 4", #14 = 5" (reduce by 50% if proper pilot holes are pre-bored)
   - Thread length = 0.875" - 1" for BCI series and 1.125" for AJS series