Boise Cascade®
ENGINEERED WOOD PRODUCTS

Mass Timber

DESIGN GUIDE

The Future is Wood™

THE DESIGN BEHIND IT ALL

Boise Cascade® stands with our customers on their Mass Timber projects from concept to completion. We draw on decades of experience in engineered wood manufacturing, construction, and logistics to help ensure a smooth construction process.

There are many ways to approach mass timber projects. We can provide insights to ensure you are selecting the right product for the application with our team of subject matter experts including Boise Cascade's research and development, structural engineering, design, construction knowledge, and cost analysis. All working together, for you.

Our team can walk you through every step of the process, including feasibility analysis, code review, and more. Boise Cascade can be a true partner in your project, reducing risk and increasing opportunity in each phase.

Whether your project is large or small in scope, Boise Cascade has the experience, capacity, and the agility to help you deliver.

CONTENTS

03 Mass Timber Development
04 Products
06 Environmental, Social, and Governance
07 Pre-Construction Sevices
08 Mass Timber Benefits
10 Design Considerations
11 Building Types
12 Boise Cascade® VLT 1.5E Panel Design Values
13 Boise Cascade® VLT 1.5E Panel Load Tables
17 Boise Cascade® VLT 1.5E Panel Span Tables
18 Boise Cascade® LVL 1.6E Beam Design Values
19 Boise Cascade® LVL 1.6E Beam Load Tables
31 Boise Cascade® LVL 1.6E Column Allowable Axial Load Tables
32 BOISE GLULAM® 1.9E Design Values and Properties
34 BOISE GLULAM® 1.9E Beam Load Tables
51 BOISE GLULAM® 1.9E Column Load Tables
52 Details and Specifications
58 Storage and Handling

MASS TIMBER PRODUCT DEVELOPMENT

Mass Timber and Innovation

No new building product solution has generated more excitement in recent years than mass timber. And nobody is more excited than Boise Cascade. For more that 60-years we've advanced the building materials industry through leading manufacturing, distribution practices, and our versatile engineered wood products. The combination of our people, products, and innovation have us poised to drive the industry further than it has before.

Adding Boise Cascade Expertise

Boise Cascade is one of the first manufacturers of both plywood and engineered wood products in North America, owning and operate three large LVL plants in the US. In addition, we have an internal technical team heavily involved in Codes and Standards activities that includes overseeing several technical committees for the American Wood Council and APA – The Engineered Wood Association, to sitting on the ANSI committee that developed the product standard (ANSI/APA PRG 320) for cross-laminated timber (CLT).

For more than 30 years, we have been using the expertise of our Product Development Lab (PDL) to drive innovation to develop new technologies to enhance solutions for the building industry. Boise Cascade's PDL is now focusing on new solutions in the mass timber industry by utilizing proven materials and processes. Strong industry relationships, driven by the innovative work at the PDL, has allowed Boise Cascade to partner with other researchers on multiple projects to demonstrate numerous applications effectiveness and feasibility.

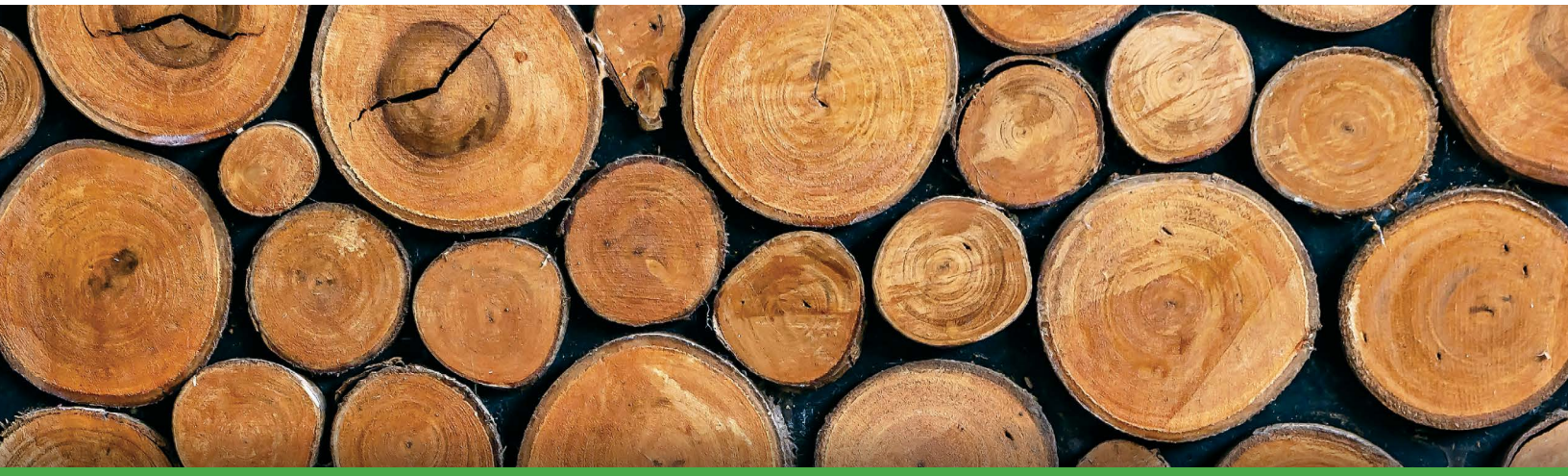

PRODUCTS

The Boise Cascade mass timber family includes Boise Cascade® VLT (Veneer Laminated Timber) panels, Versa-Lam® LVL (Laminated Veneer Lumber) beams and columns, and BOISE GLULAM® beams and columns. Our products are available in a wide range of standard and custom sizes to solve almost any design challenge. Additional sizes may be available if needed. Contact your Boise Cascade sales representative for more information.

Dry Use Only

Boise Cascade mass timber products are designed for dry-use conditions only. Dry-use conditions include dry, covered, well-ventilated interior conditions where equivalent moisture content of the product will not exceed 16%. Alaskan Yellow Cedar Glulam from Boise Cascade is suitable for outdoor use. Contact Boise Cascade for more details.

Boise Cascade® VLT Panels

Extensive knowledge in veneer-based technology for plywood and LVL allowed us to develop a higher value-added veneer-based mass timber product. The result is large Boise Cascade VLT panels available up to 12¾ inches thick, 4 feet wide and 60 feet long, for use in floors and walls. Boise Cascade VLT combines a higher strength-to-weight ratio relative to other mass timber technologies providing flexibility in design and consistent performance.

Boise Cascade VLT 1.5E Panel Sizes											
VLT Panel Thickness	**2⅛"** (2.125")	**3³⁄₁₆"** (3.188")	**4¼"** (4.25")	**5⁵⁄₁₆"** (5.313")	**6⅜"** (6.375")	**7⁷⁄₁₆"** (7.438")	**8½"** (8.50")	**9⁹⁄₁₆"** (9.563")	**10⅝"** (10.625")	**11¹¹⁄₁₆"** (11.688")	**12¾"** (12.75")
VLT Panel Width	48" (48.00")										
VLT Panel Max. Length	60' (60.00')										

Versa-Lam® LVL Beams and Columns

Boise Cascade has been manufacturing LVL for more than 30 years. Our unique manufacturing process allows us to produce the largest LVL available, up to 48 x 48 inches and 60 feet long. Versa-Lam® LVL is a proven, stable, consistent, and durable solution making the high-capacity beams and columns perfect for mass timber applications. Contact your sales representative for additional sizes.

Versa-Lam® LVL 1.6E Beam Sizes							
Beam Depth	Beam Width						
	5¼" (5.25")	7¾" (7.75")	10⅜" (10.375")	12⅛" (12.125)	15½" (15.50")	19⅞" (19.875")	23⅜" (24.375")
◆ 9½" (9.50")	x	x	x				
◆ 11⅞" (11.875")	x	x	x	x	x		
◆ 16" (16.00")	x	x	x	x	x		
18" (18.00")	x	x	x	x	x	x	x
◆ 24" (24.00")	x	x	x	x	x	x	x
30" (30.00")	x	x	x	x	x	x	x
36" (36.00")		x	x	x	x	x	x
40" (40.00")						x	x
◆ 48" (48.00")				x	x	x	x

◆ Optimized Fiber Usage, Minimum Waste Size. DfMA - Design for Manufacturing and Assembly

Versa-Lam® LVL 1.6E Column Sizes	
Imperial	Decimal
◆ 3½" x 3½"	(3.50" x 3.50")
◆ 5¼" x 5¼"	(5.25" x 5.25")
◆ 7¾" x 7⅞"	(7.75" x 7.875")
◆ 10⅜" x 9½"	(10.375" x 9.50")
◆ 12⅛" x 11⅞"	(12.125" x 11.875")
◆ 15½" x 16"	(15.50" x 16.00")
◆ 19⅞" x 16"	(19.875" x 16.00")
◆ 23⅜" x 24"	(23.375" x 24.00")

BOISE GLULAM® Beams and Columns

BOISE GLULAM® beams and columns deliver solid, consistent performance with the ability to span long distances. Available in lengths greater than 60 feet with options of various species of lumber. BOISE GLULAM® can also create stunning structural elements such as arches or curved long-spanning beams offering strength, design flexibility, and aesthetic appeal to nearly any project.

BOISE GLULAM® 1.9E Beam Sizes							
Beam Depth	Beam Width						
	3⅛" (3.125")	5⅛" (5.125")	6¾" (6.75")	8¾" (8.75")	10¾" (10.75")	12¼" (12.25")	14¼" (14.25")
6.00" (6.00")	x	x					
9.00" (9.00")	x	x	x	x			
12.00" (12.00")	x	x	x	x	x	x	
15.00" (15.00")	x	x	x	x	x	x	x
18.00" (18.00")	x	x	x	x	x	x	x
21.00" (21.00")	x	x	x	x	x	x	x
24.00" (24.00")	x	x	x	x	x	x	x
27.00" (27.00")			x	x	x	x	x
30.00" (30.00")			x	x	x	x	x
33.00" (33.00")				x	x	x	x
36.00" (36.00")				x	x	x	x
39.00" (39.00")					x	x	x
42.00" (42.00")					x	x	x

BOISE GLULAM® 1.9E Column Sizes	
Imperial	Decimal
5⅛" x 6"	(5.125" x 6.00")
8¾" x 9"	(8.75" x 9.00")
10¾" x 10½"	(10.75" x 10.50")
10¾" x 15"	(10.75" x 15.00")
12¼" x 12"	(12.25" x 12.00")
12¼" x 18"	(12.25" x 18.00")
14¼" x 15"	(14.25" x 15.00")
14¼" x 21"	(14.25" x 21.00")

ENVIRONMENTAL, SOCIAL, AND GOVERNANCE

At Boise Cascade, we are conscientious stewards of the environment. All of the products we manufacture are wood-based. Wood is a renewable resouce, and we source our raw materials from sustainable and responsibly managed forests. We require environmental and forestry law compliance and actively protect the air and water near our manufacturing sites.

Scientific evidence indicates that changing climate is associated with increasing CO_2 in the atmosphere. Trees are a renewable resource that biologically sequester and store carbon, helping to reduce atmospheric CO_2. We then transform trees into products people depend on every day. Boise Cascade's mass timber products are durable and aesthetically pleasing building materials that store carbon for years to come.

Through conservation, collaboration, and sustainable practices, we are actively contributing to the responsible use and protection of our natural environment to help ensure our natural resources will be here for future generations.

Responsible Manufacturing

Our energy-efficient manufacturing plants process wood into high-performance engineered wood products that naturally store carbon. We strive to maximize the use and minimize the waste of each log we procure. Bark and material residuals are used for carbon-neutral biomass fuel to generate over 70% of the energy needed to manufacture our products, keeping our emissions and reliance on fossil fuels low. All manufacturing energy not derived from biomass is sourced from clean natural gas.

Trusted Products

Boise Cascade is one of the largest producers of engineered wood products (EWP) and plywood in North America and the only nationwide full-line wholesale distributor of building products for residential construction. Wood products are energy efficient to both manufacture and install. Plus, wood helps indefinitely remove greenhouse gases from the atmosphere. So, continuous carbon storage and forest regeneration is supported when wood products are used in place of non-renewable materials.

More Information

Visit bc.com/resources to access Boise Cascade's Environmental Product Declarations (EPD's). Other information related to Environmental, Social, and Governance (ESG) factors can be found on bc.com/sustainability:

- Environmental Governance Policies
- ASTM Environmental Product Declaration

PRE-CONSTRUCTION SERVICES

Mass timber projects can involve multiple technologies and building materials, and there are many ways to approach the design and construction. We can help ensure that the right product is selected for your application with our team of subject matter experts, including Boise Cascade's research and development, structural engineering, and design teams. All working together for you. Tap into our vast construction knowledge, and let us support you throughout your next project.

START-TO-FINISH SUPPORT

SUPPLY

- Provide material based on design drawing of record
- Product manufacturing
- Standard & custom size product

COST ANALYSIS

- Budgetary pricing
- Fabrication costing
- Coordinate accessory components

INSTALLATION SUPPORT

- Logistics & material coordination
- Provide product & installation guidance
- Technical assistance

DESIGN-ASSIST

- Guidance with design considerations regarding Mass Timber elements
- Schematic design & connection detailing
- Grid & product optimization

PROJECT SUPPORT

- Submittal packages
- Shop drawings & fabrication models
- Provide support to authority having jurisdiction

From sourcing material through installation support, Boise Cascade's cumulative expertise and experience can provide you with technical assistance to help ensure your projects run smoothly.

MASS TIMBER BENEFITS AND CODES

Engineered wood has been around for decades. However, prior to 2021, wood framed construction in North America was limited by code to buildings no taller than 5 stories. That limitation was changed in the 2021 International Building Code (IBC). New code provisions allow wood structures to be up to 18 stories tall throughout the North America.

Wood already offers beautiful aesthetics, known structural performance, and easy workability on the jobsite. Mass timber construction adds many other advantages over steel, concrete, and masonry, including:

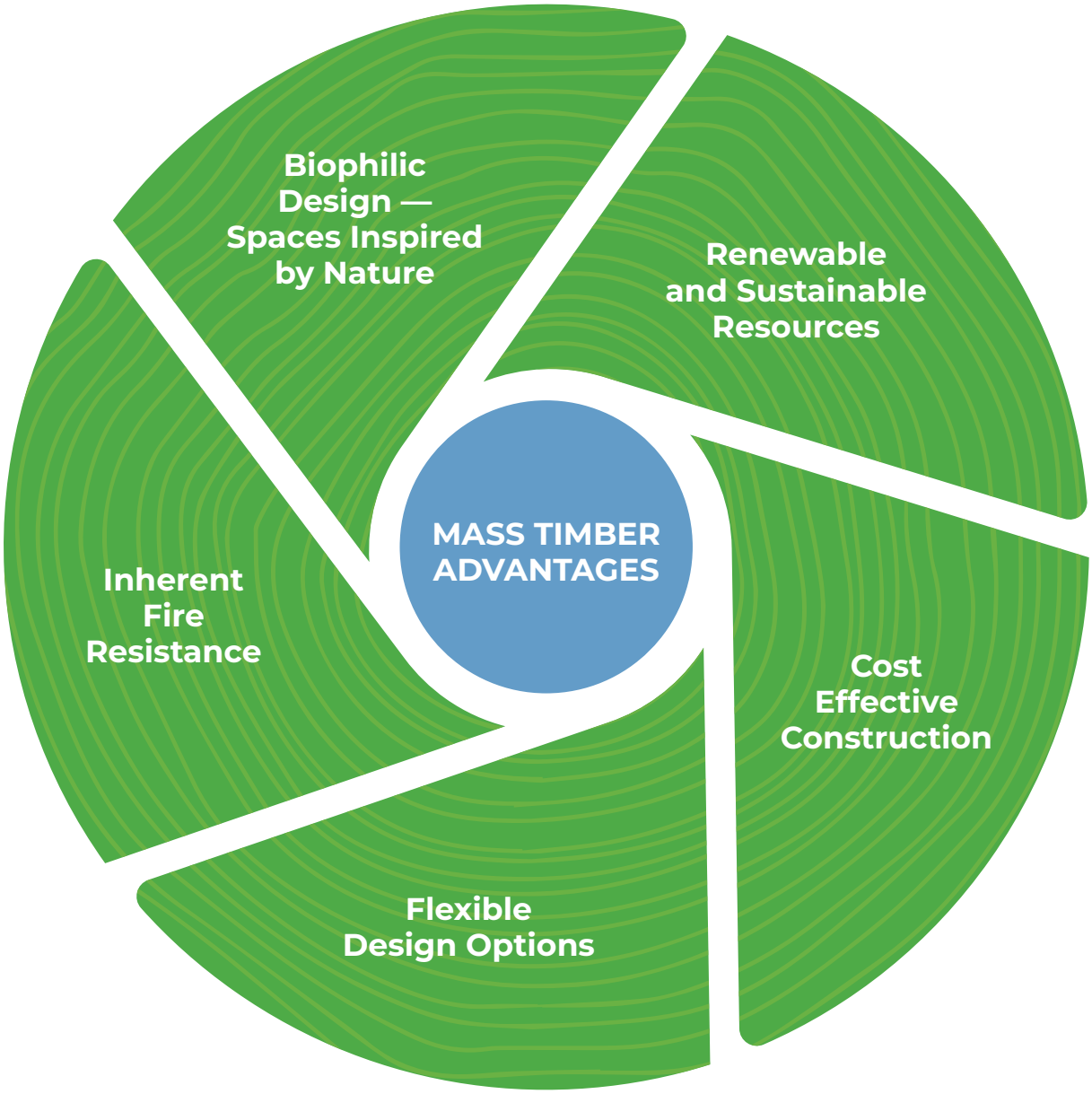

DESIGN CONSIDERATIONS

Mass timber buildings naturally have a beauty and strength that creates high expectations from both occupants and owners. In order for buildings to perform as good as they look, many other performance features besides structural design must be considered. Below are some important additional considerations. Our website contains additional information on these topics, or you can call to discuss your project and unique design considerations.

Fire Considerations

Dictated by the International Building Code and building type, fire considerations are an important element for all buildings. The known char rate for mass timber products allows structures to achieve required fire ratings and assemblies by adding mass to building elements. Additional information can be found in our fire detail section.

Acoustics and Sound

When designing structures, acoustics and sound should be evaluated to achieve a high level of acceptance by end users. Boise Cascade has over 100 tested mass timber sound assemblies available to assist with the design process. Additional information can be found in our sound detail section.

Vibration

Floor vibration can influence occupants' perception and comfort of a building. Though floor vibration analysis is not mandated in US building codes, mass timber products are lighter than other building materials and both a project's architect and structural engineer of record should consider vibration in design. To assist in the design process, vibration considerations are accounted for in the panel tables of this guide.

Water Mitigation

A moisture management plan is essential for utilizing mass timber components. Starting with proper detailing from the design team, all the way through the project construction process, great care should be taken to ensure the moisture plan is well thought out and executed. We have additional resources to assist with water-mitigation plan development.

Lateral and Vertical Design

The lighter weight of mass timber structures can have an impact on lateral and vertical load design. A project's design professional of record shall always refer to the governing building codes and current references, along with proper engineering judgement, in their design. To assist with design, examples have been developed and are available on our website.

BUILDING TYPES

The International Building Code (IBC) classifies all buildings into five types, based on the degree of fire resistance required for the structure's various components. Recent revisions to the IBC now allow wood construction in all five categories within certain guidelines. Specifically, the IBC has expanded Heavy Timber applications, accepted ANSI/APA stamped cross-laminated timber (CLT), and added a new Mass Timber definition (solid, variously built-up wood members). Enabled by mass timber technology development and the carbon benefits of wood, tall wood buildings—many over 8 stories tall—are being constructed around the world.

Type I & II

Type I (fire-resistive buildings over 75') and Type II (non-combustible buildings under 75') construction require that all materials be non-combustible, e.g., concrete and steel. However, in certain occupancy classes, heavy/mass timber and fire-retardant-treated (FRT) wood may be used in select circumstances, such as in roof construction where 20 feet or more of separation between the floor and roof is provided throughout.

Type III

Type III (protected/unprotected combustible structures) construction requires noncombustible exteriors with floors and roofs that either have 1-hour fire ratings (protected) or no rating (unprotected). Type III allows the use of untreated wood for roof and floor systems and interior wood-frame walls in buildings up to five stories tall, with additional levels if mezzanines exist. Multi-residential occupancies can be up to 270,000 square feet without additional fire separation when sprinklers are installed. Exterior wood-frame walls must be combined with non-combustible materials or be FRT wood.

Type IV

Type IV (solid wood) construction requires structural wood components to have a 1-hour fire rating and exterior walls to consist of noncombustible or FRT materials. To qualify as Heavy Timber "Type IV-HT" construction, floor planks must have a nominal thickness of at least 6 inches and columns, beams, and girders must have a nominal thickness of at least 8 inches. Heavy timber size requirements for glued-laminated and structural composite lumber (SCL) can also be found in Table 2301.11 of the International Building Code.

In 2021, the IBC added three new construction types under Type IV to allow the use of mass timber or non-combustible materials.

Type IV-A:	Maximum of 18 stories (up to 270' in height) with non-combustible protection on all mass timber elements.
Type IV-B:	Maximum 12 stories (up to 180' in height) with partially exposed areas of mass timber walls and ceilings allowed.
Type IV-C:	Maximum 9 stories (up to 85' in height) with all mass timber permitted to be exposed, with a few exceptions such as shafts, and designed for 2-hour fire resistance.

Type V

Type V (any permitted material) allows untreated wood throughout and is the most common type for multi-residential wood buildings. It allows up to four stories of wood with additional levels if mezzanines are included. Residential buildings incorporating sprinklers can be up to 135,000 square feet without additional fire separation. Type III and Type V buildings can achieve increased allowable heights and areas by using horizontal and vertical building separations, such as a concrete podium or fire walls.

VLT 1.5E Panel ASD Reference Design Values

VLT Panel Thickness	Weight	Major Strength Direction				Minor Strength Direction				Both Directions	
		Bending Moment (F_bS)	Bending Stiffness (EI_{eff})	Shear Rigidity (GA_{eff})	Horizontal Shear (V_s)	Bending Moment (F_bS)	Bending Stiffness (EI_{eff})	Shear Rigidity (GA_{eff})	Horizontal Shear (V_s)	In-Plane Shear	
	[lb/ft^2]	[lb_f*ft/ft]	[x10^6 lb_f*in^2/ft]	[x10^6 lb_f/ft]	[lb_f/ft]	[lb_f*ft/ft]	[x10^6 lb_f*in^2/ft]	[x10^6 lb_f/ft]	[lb_f/ft]	[lb_f/in^2]	[lb_f/ft]
2⅛" (2.125")	6.0	1,150	14	0.74	1,275	125	1.0	0.21	35	225	5,750
3³⁄₁₆" (3.188")	9.0	2,600	48	1.10	1,900	285	2.0	0.21	385	225	8,600
4¼" (4.25")	12.0	4,625	115	1.47	2,525	505	5.0	0.21	515	225	11,475
5⁵⁄₁₆" (5.313")	15.1	7,225	224	1.84	3,150	505	5.0	0.21	645	225	14,350
6⅜" (6.375")	18.1	10,225	380	2.58	3,775	505	5.0	0.21	1,050	225	17,225
7⁷⁄₁₆" (7.438")	21.1	13,925	603	3.01	4,425	505	5.0	0.21	1,050	225	20,075
8½" (8.50")	24.1	17,975	890	3.75	5,050	505	5.0	0.21	1,050	225	22,950
9⁹⁄₁₆" (9.563")	27.1	22,775	1,268	4.22	5,675	505	5.0	0.21	1,050	225	25,825
10⅝" (10.625")	30.1	28,100	1,739	4.69	6,300	505	5.0	0.21	1,050	225	28,700
11¹¹⁄₁₆" (11.688")	33.1	34,000	2,315	5.16	6,950	505	5.0	0.21	1,050	225	31,550
12¾" (12.75")	36.1	40,475	3,005	5.63	7,575	505	5.0	0.21	1,050	225	34,425

NOTES

- Deflection under a specified uniformly distributed load, w, acting perpendicular to the face of a single-span panel may be calculated as a sum of the deflections due to moment and shear effects using the effective bending stiffness, $(EI)_{eff}$, and the effective in-plane (planar) shear rigidity, $(GA)_{eff}$, as follows:

$$\delta = \frac{22.5wL^4}{(EI)_{eff}} + \frac{3wL^2}{2(GA)_{eff}}$$

where:

δ = estimated deflection, in.
L = span, ft.
w = uniform load, plf
$(GA)_{eff}$ = tabulated effective in-plane (planar) shear rigidity, 10^6 lb_f/ft
$(EI)_{eff}$ = tabulated effective bending stiffness, 10^6 lb_f*in^2/ft

- For a concentrated line load, P, located in the middle of a single span VLT panel acting perpendicular to the panel, the deflection may be calculated as follows:

$$\delta = \frac{36PL^3}{(EI)_{eff}} + \frac{3PL}{(GA)_{eff}}$$

where:

δ = estimated deflection, in.
L = span, ft.
P = concentrated load, lb_f
$(GA)_{eff}$ = tabulated effective in-plane (planar) shear rigidity, 10^6 lb_f/ft
$(EI)_{eff}$ = tabulated effective bending stiffness, 10^6 lb_f*in^2/ft

Floor Spans — 1.0 Duration [PLF]

Span	Load Type	VLT 1.5E Panel Thickness										
		2⅛" (2.125")	3 3/16" (3.188")	4¼" (4.25")	5 5/16" (5.313")	6⅜" (6.375")	7 7/16" (7.438")	8½" (8.50")	9 9/16" (9.563")	10⅝" (10.625")	11 11/16" (11.688")	12¾" (12.75")
6'	Live	92	300	-	-	-	-	-	-	-	-	-
	Total	131	441	658	823	987	1,152	1,317	1,481	1,646	1,811	1,975
7'	Live	58	193	441	-	-	-	-	-	-	-	-
	Total	81	281	563	703	844	984	1,125	1,266	1,407	1,547	1,688
8'	Live		132	303	563	-	-	-	-	-	-	-
	Total		188	442	613	736	858	982	1,104	1,227	1,350	1,472
9'	Live		93	217	406	-	-	-	-	-	-	-
	Total		131	313	543	652	761	870	978	1,087	1,196	1,304
10'	Live		69	160	302	503	-	-	-	-	-	-
	Total		94	228	438	585	682	780	878	975	1,073	1,170
11'	Live		52	122	230	385	593	-	-	-	-	-
	Total		69	170	331	530	619	707	795	884	972	1,060
12'	Live		40	94	180	301	465	-	-	-	-	-
	Total		51	129	254	433	565	646	727	808	888	969
13'	Live			75	143	239	371	540	-	-	-	-
	Total			100	199	340	520	595	668	743	817	892
14'	Live			60	115	193	301	438	610	-	-	-
	Total			78	157	271	430	550	619	688	757	825
15'	Live			49	94	158	247	360	503	-	-	-
	Total			61	126	219	349	512	576	640	704	767
16'	Live				78	131	205	300	419	564	-	-
	Total				102	178	286	425	538	598	658	718
17'	Live				65	110	172	252	353	476	-	-
	Total				83	146	237	353	502	561	617	673
18'	Live				55	93	146	214	300	405	529	-
	Total				67	121	197	296	422	528	581	633
19'	Live				47	79	125	183	257	347	455	580
	Total				55	100	165	249	357	490	549	598
20'	Live				40	68	107	157	221	300	393	503
	Total				45	83	139	211	304	419	519	567
22'	Live					51	81	119	168	228	300	384
	Total					58	100	154	224	311	416	512
24'	Live						63	92	130	177	233	300
	Total						73	114	168	235	316	412
26'	Live						50	73	103	140	185	238
	Total						53	85	127	180	244	320
28'	Live							59	83	113	149	192
	Total							63	97	138	190	251
30'	Live								68	92	122	157
	Total								74	108	149	199

NOTES

- Live load values are limited by L/360 deflection. Engineer of Record shall consider floor performance when specifying panel thickness.
- When a live load value is not shown, the total load value will control.
- Total loads are limited by L/240 deflection, shear, or moment. Total load values shown are in addition to the panel's self weight.
- Concentrated loads are not considered and may be required by code.
- Bearing lengths
  - Bearing is required across the full width of the panel.
  - Bearing lengths shown are the minimum required at end and interior supports in inches.
  - Bearing lengths are based on the compressive strength, perpendicular-to-grain, of the panel material. Other bearing materials or design considerations may require longer bearing lengths.
- Minimum bearing lengths:
  - 1½" at end bearings
  - 3" at intermediate bearings
  - Longer end bearings are typically required for adequate fastener end and edge distances and/or fire protection.
- Table assumes:
  - Load duration factor of 1.0.
  - Spans measured center-line to center-line of supports.
  - Worst case of single or multiple spans.
  - Maximum total length of 60' per manufacturing capabilities.
- For fire-resistent designs, use char rate calculation per the National Design Specification for Wood Construction (NDS). Contact Boise Cascade engineering for more information.
- Loads shown are intended for preliminary design purposes only. Analysis using appropriate software may result in higher allowable loads than shown.

Roof - Snow Spans — 1.15 Duration [PLF]

Span	Load Type	Panel Thickness										
		2⅛" (2.125")	3³⁄₁₆" (3.188")	4¼" (4.25")	5⁵⁄₁₆" (5.313")	6⅜" (6.375")	7⁷⁄₁₆" (7.438")	8½" (8.50")	9⁹⁄₁₆" (9.563")	10⅝" (10.625")	11¹¹⁄₁₆" (11.688")	12¾" (12.75")
6'	Live	138	450	-	-	-	-	-	-	-	-	-
	Total	178	569	759	949	1,138	1,328	1,518	1,708	1,898	2,087	2,277
7'	Live	88	290	-	-	-	-	-	-	-	-	-
	Total	111	378	649	811	973	1,136	1,298	1,460	1,622	1,784	1,947
8'	Live	59	198	455	-	-	-	-	-	-	-	-
	Total	73	254	566	707	849	991	1,133	1,274	1,415	1,557	1,699
9'	Live	42	140	325	610	-	-	-	-	-	-	-
	Total	50	178	421	627	753	878	1,004	1,129	1,255	1,380	1,506
10'	Live	31	103	241	454	-	-	-	-	-	-	-
	Total	35	128	309	563	675	788	901	1,013	1,126	1,239	1,352
11'	Live		78	183	346	578	-	-	-	-	-	-
	Total		95	231	446	613	715	817	919	1,021	1,123	1,225
12'	Live		60	142	270	451	-	-	-	-	-	-
	Total		71	177	344	560	653	747	840	933	1,027	1,120
13'	Live		48	112	214	359	557	-	-	-	-	-
	Total		54	137	270	460	601	687	773	859	945	1,031
14'	Live		38	90	173	290	451	-	-	-	-	-
	Total		42	108	215	368	557	637	716	796	875	955
15'	Live			73	141	237	370	540	-	-	-	-
	Total			85	173	298	472	592	665	741	815	889
16'	Live			60	117	197	308	449	-	-	-	-
	Total			68	141	244	389	554	623	692	762	831
17'	Live			50	98	165	258	378	-	-	-	-
	Total			55	115	202	323	479	529	650	715	780
18'	Live			43	83	140	219	320	450	607	-	-
	Total			45	95	168	270	402	551	612	673	734
19'	Live				70	119	187	274	385	520	-	-
	Total				79	140	228	340	486	578	636	694
20'	Live				60	102	161	236	332	450	590	-
	Total				65	118	193	290	415	548	602	657
22'	Live				45	77	122	179	252	342	450	576
	Total				45	84	141	213	308	435	545	594
24'	Live					60	94	138	196	266	350	450
	Total					61	104	160	233	323	433	541
26'	Live						75	109	174	211	278	357
	Total						78	121	204	250	336	439
28'	Live						58	88	124	170	224	288
	Total						58	92	138	195	265	347
30'	Live						43	71	102	138	183	236
	Total						43	71	108	154	210	278

NOTES

- Live load values are limited by L/240 deflection. Engineer of Record shall consider floor performance when specifying panel thickness.
- When a live load value is not shown, the total load value will control.
- Total loads are limited by L/180 deflection, shear, or moment. Total load values shown are in addition to the panel's self weight.
- Concentrated loads are not considered and may be required by code.
- Bearing lengths
  - Bearing is required across the full width of the panel.
  - Bearing lengths shown are the minimum required at end and interior supports in inches.
  - Bearing lengths are based on the compressive strength, perpendicular-to-grain, of the panel material. Other bearing materials or design considerations may require longer bearing lengths.
- Minimum bearing lengths:
  - 1½" at end bearings
  - 3" at intermediate bearings
  - Longer end bearings are typically required for adequate fastener end and edge distances and/or fire protection.
- Table assumes:
  - Load duration factor of 1.15.
  - Spans measured center-line to center-line of supports.
  - Worst case of single or multiple spans.
  - Maximum total length of 60' per manufacturing capabilities.
- For fire-resistent designs, use char rate calculation per the National Design Specification for Wood Construction (NDS). Contact Boise Cascade engineering for more information.
- Loads shown are intended for preliminary design purposes only. Analysis using appropriate software may result in higher allowable loads than shown.

Roof - Non-Snow Spans — 1.25 Duration [PLF]

Span	Load Type	Panel Thickness										
		2 1/8" (2.125")	3 3/16" (3.188")	4 1/4" (4.25")	5 5/16" (5.313")	6 3/8" (6.375")	7 7/16" (7.438")	8 1/2" (8.50")	9 9/16" (9.563")	10 5/8" (10.625")	11 11/16" (11.688")	12 3/4" (12.75")
6'	Live	138	450	-	-	-	-	-	-	-	-	-
	Total	178	591	826	1,033	1,239	1,146	1,652	1,859	2,066	2,272	2,479
7'	Live	88	290	661	-	-	-	-	-	-	-	-
	Total	111	378	706	883	1,058	1,236	1,413	1,589	1,766	1,943	2,119
8'	Live	59	198	455	-	-	-	-	-	-	-	-
	Total	73	254	594	771	924	1,079	1,233	1,387	1,541	1,696	1,850
9'	Live	42	140	325	609	-	-	-	-	-	-	-
	Total	50	178	421	683	820	957	1,093	1,230	1,367	1,503	1,640
10'	Live	31	103	241	454	-	-	-	-	-	-	-
	Total	35	128	308	589	736	859	982	1,104	1,227	1,350	1,472
11'	Live		78	183	346	578	-	-	-	-	-	-
	Total		95	231	446	667	779	890	1,001	1,112	1,224	1,335
12'	Live		60	142	270	451	698	-	-	-	-	-
	Total		71	177	344	583	712	814	915	1,017	1,119	1,221
13'	Live		48	112	214	359	557	-	-	-	-	-
	Total		54	137	270	460	656	749	843	937	1,030	1,124
14'	Live		38	90	173	290	451	657	-	-	-	-
	Total		42	108	215	368	580	694	781	868	954	1,041
15'	Live			74	141	238	371	540	-	-	-	-
	Total			86	173	298	472	646	727	808	888	969
16'	Live			61	117	197	308	449	629	-	-	-
	Total			69	141	244	389	574	680	755	831	906
17'	Live			51	98	165	258	378	529	-	-	-
	Total			56	115	202	323	479	638	709	780	851
18'	Live			43	83	139	219	320	450	607	735	-
	Total			45	95	167	270	402	572	668	735	801
19'	Live				71	119	187	274	385	521	682	-
	Total				79	140	228	340	486	631	694	757
20'	Live				61	102	161	236	332	450	590	-
	Total				65	118	193	290	415	569	658	718
22'	Live				45	77	122	179	252	342	450	576
	Total				45	84	141	213	308	425	565	649
24'	Live					60	94	138	196	266	350	448
	Total					61	104	160	233	323	433	562
26'	Live						74	109	155	211	278	357
	Total						78	121	178	250	336	439
28'	Live						58	88	124	170	224	288
	Total						58	92	138	195	265	347
30'	Live						43	71	102	139	183	236
	Total						43	71	108	154	210	277

NOTES

- Live load values are limited by L/240 deflection. Engineer of Record shall consider floor performance when specifying panel thickness.
- When a live load value is not shown, the total load value will control.
- Total loads are limited by L/180 deflection, shear, or moment. Total load values shown are in addition to the panel's self weight.
- Concentrated loads are not considered and may be required by code.
- Bearing lengths
  - Bearing is required across the full width of the panel.
  - Bearing lengths shown are the minimum required at end and interior supports in inches.
  - Bearing lengths are based on the compressive strength, perpendicular-to-grain, of the panel material. Other bearing materials or design considerations may require longer bearing lengths.
- Minimum bearing lengths:
  - 1½" at end bearings
  - 3" at intermediate bearings
  - Longer end bearings are typically required for adequate fastener end and edge distances and/or fire protection.
- Table assumes:
  - Load duration factor of 1.25.
  - Spans measured center-line to center-line of supports.
  - Worst case of single or multiple spans.
  - Maximum total length of 60' per manufacturing capabilities.
- For fire-resistent designs, use char rate calculation per the National Design Specification for Wood Construction (NDS). Contact Boise Cascade engineering for more information.
- Loads shown are intended for preliminary design purposes only. Analysis using appropriate software may result in higher allowable loads than shown.

Allowable Floor Spans — 15 [PSF] Dead Load

Condition	Span Condition	VLT Panel Thickness	Vibration	40 psf Live Residential, Classroom, Hotel Private Room	50 psf Live Office	60 psf Live Medical/ Dental Laboratories	75 psf Live Retail Upper Floors	80 psf Live Office, School, Medical: Upper Floor Corridors	100 psf Live Lobbies, Retail & Hotel Corridors, Dining Rooms	125 psf Live Light Storage
15 psf Dead Load (No topping)	Single Span	2 1/8" (2.125")	7' - 4"	7' - 10"	7' - 4"	6' - 11"	6' - 5"	6' - 3"	5' - 9"	5' - 4"
		3 3/16" (3.188")	10' - 0"	11' - 8"	11' - 1"	10' - 5"	9' - 8"	9' - 5"	8' - 9"	8' - 1"
		4 1/4" (4.25")	12' - 5"	15' - 5"	14' - 8"	14' - 0"	12' - 11"	12' - 8"	11' - 9"	10' - 10"
		5 5/16" (5.313")	14' - 9"	19' - 0"	18' - 2"	17' - 5"	16' - 2"	15' - 10"	14' - 8"	13' - 7"
		6 3/8" (6.375")	16' - 11"	22' - 4"	21' - 5"	20' - 7"	19' - 4"	18' - 11"	17' - 6"	16' - 3"
		7 7/16" (7.438")	19' - 0"	25' - 8"	24' - 8"	23' - 9"	22' - 7"	22' - 1"	20' - 5"	18' - 11"
		8 1/2" (8.50")	20' - 11"	28' - 11"	27' - 9"	26' - 9"	25' - 6"	25' - 2"	23' - 4"	21' - 7"
		9 9/16" (9.563")	22' - 10"	32' - 1"	30' - 11"	29' - 10"	28' - 6"	28' - 1"	26' - 3"	24' - 4"
		10 5/8" (10.625")	24' - 9"	35' - 3"	33' - 11"	32' - 10"	31' - 4"	30' - 11"	29' - 2"	27' - 0"
		11 11/16" (11.688")	26' - 7"	38' - 4"	36' - 11"	35' - 9"	34' - 3"	33' - 9"	32' - 1"	29' - 9"
		12 3/4" (12.75")	28' - 4"	41' - 4"	39' - 11"	38' - 8"	37' - 0"	36' - 6"	34' - 10"	32' - 5"
	Mutiple Spans	2 1/8" (2.125")	7' - 4"	9' - 11"	9' - 2"	8' - 8"	8' - 0"	7' - 10"	7' - 3"	6' - 9"
		3 3/16" (3.188")	10' - 0"	14' - 11"	13' - 10"	13' - 0"	12' - 1"	11' - 10"	11' - 0"	10' - 1"
		4 1/4" (4.25")	12' - 5"	20' - 0"	18' - 7"	17' - 5"	16' - 2"	15' - 10"	14' - 9"	13' - 2"
		5 5/16" (5.313")	14' - 9"	25' - 0"	23' - 2"	21' - 10"	20' - 3"	19' - 10"	18' - 5"	16' - 2"
		6 3/8" (6.375")	16' - 11"	29' - 10"	27' - 8"	26' - 0"	24' - 2"	23' - 8"	21' - 11"	19' - 0"
		7 7/16" (7.438")	19' - 0"	34' - 6"	32' - 3"	30' - 4"	28' - 2"	27' - 7"	25' - 7"	21' - 9"
		8 1/2" (8.50")	20' - 11"	38' - 10"	36' - 9"	34' - 7"	32' - 1"	31' - 5"	28' - 9"	24' - 5"
		9 9/16" (9.563")	22' - 10"	43' - 2"	41' - 4"	38' - 11"	36' - 1"	35' - 4"	31' - 8"	26' - 11"
		10 5/8" (10.625")	24' - 9"	47' - 4"	45' - 7"	43' - 3"	40' - 2"	39' - 3"	34' - 5"	29' - 5"
		11 11/16" (11.688")	26' - 7"	51' - 6"	49' - 8"	47' - 7"	44' - 2"	42' - 10"	37' - 1"	31' - 9"
		12 3/4" (12.75")	28' - 4"	55' - 6"	53' - 7"	51' - 11"	47' - 5"	45' - 8"	39' - 8"	34' - 0"

NOTES

- Vibration span value per U.S. CLT Handbook. Project's engineer of record shall consider floor performance when specifying panel thickness.
- Span table does not consider concentrated loads, which may be required by code in the buiding areas noted.
- Span loads are limited by shear, moment, or deflection limits of L/360 for live load and L/240 for total load. The VLT panel's self-weight is included.
- Span values consider worst case of single or multiple spans (limited to total length of 60' per manufacturing capabilities).
- Bearing length is based on the compressive strength, perpendicular-to-grain, of the VLT panel.
- Minimum bearing lengths:
  - 1½" at end bearings
  - 3" at intermediate bearings
  - Longer end bearings are typcially required for adequate fastener end and edge distances and/or fire protection.
- For fire-resistent designs, use char rate calculation per the National Design Specification for Wood Construction (NDS). Contact Boise Cascade engineering for more information.

Allowable Floor Spans — 35 [PSF] Dead Load

Condition	Span Condition	VLT Panel Thickness	Vibration	40 psf Live Residential, Classroom, Hotel Private Room	50 psf Live Office	60 psf Live Medical/ Dental Laboratories	75 psf Live Retail Upper Floors	80 psf Live Office, School, Medical: Upper Floor Corridors	100 psf Live Lobbies, Retail and Hotel Corridors, Dining Rooms	125 psf Live Light Storage
35 psf Dead Load (2" LWT concrete topping)	Single Span	2 1/8" (2.125")	7' - 4"	7' - 2"	6' - 10"	6' - 8"	6' - 4"	6' - 3"	5' - 9"	5' - 4"
		3 3/16" (3.188")	10' - 0"	10' - 8"	10' - 3"	9' - 11"	9' - 6"	9' - 4"	8' - 9"	8' - 1"
		4 1/4" (4.25")	12' - 5"	14' - 1"	13' - 7"	13' - 2"	12' - 7"	12' - 5"	11' - 9"	10' - 10"
		5 5/16" (5.313")	14' - 9"	17' - 5"	16' - 10"	16' - 3"	15' - 7"	15' - 4"	14' - 8"	13' - 7"
		6 3/8" (6.375")	16' - 11"	20' - 7"	19' - 11"	19' - 3"	18' - 6"	18' - 3"	17' - 5"	16' - 3"
		7 7/16" (7.438")	19' - 0"	23' - 9"	23' - 0"	22' - 3"	21' - 4"	21' - 1"	20' - 2"	18' - 11"
		8 1/2" (8.50")	20' - 11"	26' - 9"	25' - 11"	25' - 2"	24' - 2"	23' - 11"	22' - 10"	21' - 7"
		9 9/16" (9.563")	22' - 10"	29' - 10"	28' - 11"	28' - 1"	27' - 0"	26' - 8"	25' - 6"	24' - 0"
		10 5/8" (10.625")	24' - 9"	32' - 10"	31' - 10"	30' - 11"	29' - 9"	29' - 5"	28' - 2"	26' - 3"
		11 11/16" (11.688")	26' - 7"	35' - 9"	34' - 8"	33' - 9"	32' - 6"	32' - 2"	30' - 9"	28' - 5"
		12 3/4" (12.75")	28' - 4"	38' - 8"	37' - 6"	36' - 6"	35' - 3"	34' - 10"	33' - 5"	30' - 7"
	Mutiple Spans	2 1/8" (2.125")	7' - 4"	9' - 7"	9' - 2"	8' - 8"	8' - 0"	7' - 10"	7' - 1"	6' - 0"
		3 3/16" (3.188")	10' - 0"	14' - 4"	13' - 10"	13' - 0"	12' - 1"	11' - 10"	10' - 5"	8' - 11"
		4 1/4" (4.25")	12' - 5"	19' - 0"	18' - 4"	17' - 5"	16 - 2"	15' - 9"	13' - 7"	11' - 8"
		5 5/16" (5.313")	14' - 9"	23' - 5"	22' - 7"	21' - 10"	20' - 0"	19' - 3"	16' - 8"	14' - 4"
		6 3/8" (6.375")	16' - 11"	27' - 8"	26' - 9"	25' - 11"	23' - 5"	22' - 7"	19' - 7"	16' - 10"
		7 7/16" (7.438")	19' - 0"	31' - 11"	30' - 11"	30' - 0"	26' - 8"	25' - 9"	22' - 5"	19' - 4"
		8 1/2" (8.50")	20' - 11"	36' - 0"	34' - 10"	33' - 7"	29' - 10"	28' - 9"	25' - 2"	21' - 9"
		9 9/16" (9.563")	22' - 10"	40' - 1"	38' - 10"	36' - 10"	32' - 10"	31' - 8"	27' - 9"	24' - 1"
		10 5/8" (10.625")	24' - 9"	44' - 1"	42' - 9"	39' - 11"	35' - 8"	34' - 5"	30' - 3"	26' - 4"
		11 11/16" (11.688")	26' - 7"	48' - 1"	46' - 5"	42' - 10"	38' - 4"	37' - 1"	32' - 8"	28' - 6"
		12 3/4" (12.75")	28' - 4"	51' - 11"	49' - 5"	45' - 8"	41' - 0"	39' - 8"	35' - 0"	30' - 7"

NOTES

- Vibration span value per U.S. CLT Handbook. Project's engineer of record shall consider floor performance when specifying panel thickness.
- Span table does not consider concentrated loads, which may be required by code in the buiding areas noted.
- Span loads are limited by shear, moment, or deflection limits of L/360 for live load and L/240 for total load. The VLT panel's self-weight is included.
- Span values consider worst case of single or multiple spans (limited to total length of 60' per manufacturing capabilities).
- Bearing length is based on the compressive strength, perpendicular-to-grain, of the VLT panel.
- Minimum bearing lengths:
  - 1½" at end bearings
  - 3" at intermediate bearings
  - Longer end bearings are typcially required for adequate fastener end and edge distances and/or fire protection.
- For fire-resistent designs, use char rate calculation per the National Design Specification for Wood Construction (NDS). Contact Boise Cascade engineering for more information.

Versa-Lam® LVL 1.6E Beam Reference Design Values and Section Properties

Beam Width	Beam Depth	Weight [lb/ft]	Allowable Shear [lb]	Allowable Moment (Bottom Edge Tension) [lb*ft]	Section Area [in²]	Section Modulus [in³]	Moment of Inertia [in⁴]
5¼" (5.25")	◆ 9 ½" (9.50")	12.8	7,481	15,196	49.9	79.0	375.1
	◆ 11⅞" (11.875")	16.0	9,352	23,162	62.3	123.4	732.6
	◆ 16" (16.00")	21.6	12,600	39,652	84.0	224.0	1,792.0
	18" (18.00")	24.3	14,175	49,016	94.5	283.5	2,551.5
	◆ 24" (24.00")	32.4	18,900	82,267	126.0	504.0	6,048.0
	30" (30.00")	40.5	23,625	122,932	157.5	787.5	11,812.5
7¾" (7.75")	◆ 9 ½" (9.50")	18.9	11,044	22,432	73.6	116.6	553.7
	◆ 11⅞" (11.875")	23.6	13,805	34,192	92.0	182.2	1,081.5
	◆ 16" (16.00")	31.9	18,600	58,533	124.0	330.7	2,645.3
	18" (18.00")	35.8	20,925	72,357	139.5	418.5	3,766.5
	◆ 24" (24.00")	47.8	27,900	121,442	186.0	744.0	8,928.0
	30" (30.00")	59.7	34,875	181,471	232.5	1,162.5	17,437.5
	36" (36.00")	71.7	41,850	251,961	279.0	1,674.0	30,132.0
10⅜" (10.375")	◆ 9 ½" (9.50")	25.3	14,784	30,030	98.6	156.1	741.3
	◆ 11⅞" (11.875")	31.7	18,480	45,773	123.2	243.8	1,447.8
	◆ 16" (16.00")	42.7	24,900	78,359	166.0	442.7	3,541.3
	18" (18.00")	48.0	28,013	96,865	186.8	560.3	5,042.3
	◆ 24" (24.00")	64.0	37,350	162,575	249.0	996.0	11,952.0
	30" (30.00")	80.0	46,688	242,936	311.3	1,556.3	23,343.8
	36" (36.00")	96.0	56,025	337,302	373.5	2,241.0	40,338.0
12⅛" (12.125")	◆ 11⅞" (11.875")	37.0	21,598	53,494	144.0	285.0	1,692.0
	◆ 16" (16.00")	49.8	29,100	91,576	194.0	517.3	4,138.7
	18" (18.00")	56.1	32,738	113,203	218.3	654.8	5,892.8
	◆ 24" (24.00")	74.8	43,650	189,998	291.0	1,164.0	13,968.0
	30" (30.00")	93.5	54,563	283,914	363.8	1,818.8	27,281.3
	36" (36.00")	112.2	65,475	394,196	436.5	2,619.0	47,142.0
15½" (15.50")	◆ 11⅞" (11.875")	47.3	27,609	68,384	184.1	364.3	2,163.0
	◆ 16" (16.00")	63.7	37,200	117,067	248.0	661.3	5,290.7
	18" (18.00")	71.7	41,850	144,713	279.0	837.0	7,533.0
	◆ 24" (24.00")	95.6	55,800	242,884	372.0	1,488.0	17,856.0
	30" (30.00")	119.5	69,750	362,941	465.0	2,325.0	34,875.0
	36" (36.00")	143.4	83,700	503,921	558.0	3,348.0	60,264.0
19⅞" (19.875")	18" (18.00")	91.9	53,663	185,560	357.8	1,073.3	9,659.3
	◆ 24" (24.00")	122.6	71,550	311,439	477.0	1,908.0	22,896.0
	30" (30.00")	153.2	89,438	465,384	596.3	2,981.3	44,718.8
	36" (36.00")	183.8	107,325	646,157	715.5	4,293.0	77,274.0
	40" (40.00")	204.3	119,250	781,091	795.0	5,300.0	106,000.0
	◆ 48" (48.00")	245.1	143,100	1,084,495	954.0	7,632.0	183,168.0
23⅜" (23.375")	18" (18.00")	108.1	63,113	218,237	420.8	1,262.3	11,360.3
	◆ 24" (24.00")	144.1	84,150	366,284	561.0	2,244.0	26,928.0
	30" (30.00")	180.2	105,188	547,339	701.3	3,506.3	52,593.8
	36" (36.00")	216.2	126,225	759,945	841.5	5,049.0	90,882.0
	40" (40.00")	240.2	140,250	918,641	935.0	6,233.4	124,666.7
	◆ 48" (48.00")	288.3	168,300	1,275,475	1,122.0	8,976.0	215,424.0

◆ Optimized Fiber Usage, Minimum Waste Size. DfMA - Design for Manufacturing and Assembly

NOTES

Bending

– $F_b = 2250^* \left[\frac{12}{d}\right]^{1/5}$ lb/in²; where: d=beam depth (2050 for 1.75" thick product).

Modulus of Elasticity-True

$E_t = 1.6 \times 10^6$ lb/in²

Modulus of Elasticity-Apparent

$E_a = 1.5 \times 10^6$ lb/in²

Horizontal Shear

$F_v = 225$ lb/in²

Compression Perpendicular to Grain

$F_{c\perp} = 525$ lb/in²

Floor Spans — 1.0 Duration [PLF]

Span	Load Types and Min. Bearing	5¼" (5.25") Width						7¾" (7.75") Width						
		Beam Depth						Beam Depth						
		◆ 9½" (9.50")	◆ 11⅞" (11.875")	◆ 16" (16.00")	18" (18.00")	◆ 24" (24.00")	30" (30.00")	◆ 9½" (9.50")	◆ 11⅞" (11.875")	◆ 16" (16.00")	18" (18.00")	◆ 24" (24.00")	30" (30.00")	36" (36.00")
10'	Total	1,204	1,762	2,541	2,960	4,415	6,260	1,777	2,601	3,751	4,369	6,517	9,240	9,693
	Live	811	1,510	-	-	-	-	1,197	2,228	-	-	-	-	-
	Min. End/Int. Brg [in]	2.2 / 5.5	3.2 / 8.1	4.6 / 11.6	5.4 / 13.5	8.1 / 20.2	11.4 / 28.6	2.2 / 5.5	3.2 / 8.1	4.6 / 11.6	5.4 / 13.5	8.1 / 20.2	11.4 / 28.6	12 / 30
12'	Total	711	1,272	2,022	2,338	3,404	4,685	1,049	1,878	2,984	3,452	5,025	6,915	8,066
	Live	482	910	-	-	-	-	712	1,343	-	-	-	-	-
	Min. End/Int. Brg [in]	1.6 / 3.9	2.8 / 7	4.4 / 11.1	5.1 / 12.9	7.5 / 18.7	10.3 / 25.7	1.6 / 3.9	2.8 / 7	4.4 / 11.1	5.1 / 12.9	7.5 / 18.7	10.3 / 25.7	12 / 30
14'	Total	450	866	1,597	1,931	2,768	3,740	665	1,278	2,357	2,850	4,086	5,520	6,903
	Live	309	588	1,359	1,874	-	-	456	868	2,006	2,766	-	-	-
	Min. End/Int. Brg [in]	1.5 / 3	2.2 / 5.6	4.1 / 10.3	5 / 12.4	7.1 / 17.8	9.6 / 24	1.5 / 3	2.2 / 5.6	4.1 / 10.3	5 / 12.4	7.1 / 17.8	9.6 / 24	12 / 30
16'	Total	301	585	1,218	1,507	2,330	3,110	444	863	1,797	2,225	3,440	4,590	5,907
	Live	209	400	937	1,301	-	-	309	591	1,383	1,920	-	-	-
	Min. End/Int. Brg [in]	1.5 / 3	1.7 / 4.4	3.6 / 9	4.4 / 11.1	6.9 / 17.1	9.1 / 22.9	1.5 / 3	1.7 / 4.4	3.6 / 9	4.4 / 11.1	6.9 / 17.1	9.1 / 22.9	11.8 / 29.4
18'	Total	209	411	957	1,186	1,999	2,660	309	606	1,413	1,751	2,951	3,926	5,001
	Live	148	285	672	937	-	-	219	420	992	1,383	-	-	-
	Min. End/Int. Brg [in]	1.5 / 3	1.5 / 3.5	3.2 / 8	4 / 9.9	6.6 / 16.6	8.8 / 22	1.5 / 3	1.5 / 3.5	3.2 / 8	4 / 9.9	6.6 / 16.6	8.8 / 22	11.2 / 28.1
20'	Total	150	298	724	956	1,613	2,322	221	440	1,069	1,411	2,381	3,428	4,334
	Live	109	209	497	696	1,553	-	160	309	734	1,027	2,293	-	-
	Min. End/Int. Brg [in]	1.5 / 3	1.5 / 3	2.7 / 6.8	3.6 / 8.9	6 / 14.9	8.6 / 21.4	1.5 / 3	1.5 / 3	2.7 / 6.8	3.6 / 8.9	6 / 14.9	8.6 / 21.4	10.8 / 27.1
22'	Total	110	221	545	771	1,327	1,991	162	327	804	1,138	1,960	2,940	3,821
	Live	82	158	378	530	1,195	-	121	233	557	783	1,764	-	-
	Min. End/Int. Brg [in]	1.5 / 3	1.5 / 3	2.3 / 5.7	3.2 / 7.9	5.4 / 13.6	8.1 / 20.3	1.5 / 3	1.5 / 3	2.3 / 5.7	3.2 / 7.9	5.4 / 13.6	8.1 / 20.3	10.5 / 26.3
24'	Total	82	168	418	595	1,110	1,667	121	247	618	878	1,639	2,461	3,416
	Live	63	122	293	413	937	-	93	181	433	609	1,383	-	-
	Min. End/Int. Brg [in]	1.5 / 3	1.5 / 3	1.9 / 4.8	2.7 / 6.7	5 / 12.4	7.4 / 18.6	1.5 / 3	1.5 / 3	1.9 / 4.8	2.7 / 6.7	5 / 12.4	7.4 / 18.6	10.3 / 25.7
26'	Total	62	129	327	467	941	1,414	92	190	483	689	1,389	2,088	2,910
	Live	50	97	232	327	748	1,395	74	143	343	483	1,104	2,059	-
	Min. End/Int. Brg [in]	1.5 / 3	1.5 / 3	1.6 / 4.1	2.3 / 5.8	4.6 / 11.5	6.9 / 17.2	1.5 / 3	1.5 / 3	1.6 / 4.1	2.3 / 5.8	4.6 / 11.5	6.9 / 17.2	9.5 / 23.8
28'	Total		100	259	372	807	1,214	70	148	382	548	1,191	1,792	2,499
	Live		78	187	264	606	1,136	59	115	276	390	894	1,677	-
	Min. End/Int. Brg [in]		1.5 / 3	1.5 / 3.6	2 / 5	4.3 / 10.7	6.4 / 15.9	1.5 / 3	1.5 / 3	1.5 / 3.6	2 / 5	4.3 / 10.7	6.4 / 15.9	8.8 / 22.1
30'	Total		79	207	299	699	1,052	53	116	306	442	1,032	1,553	2,168
	Live		63	153	216	497	937	48	93	225	318	734	1,383	-
	Min. End/Int. Brg [in]		1.5 / 3	1.5 / 3.1	1.8 / 4.4	4 / 9.9	5.9 / 14.9	1.5 / 3	1.5 / 3	1.5 / 3.1	1.8 / 4.4	4 / 9.9	5.9 / 14.9	8.3 / 20.6

◆ Optimized Fiber Usage, Minimum Waste Size. DfMA - Design for Manufacturing and Assembly

NOTES

- Span loads are limited by shear, moment, or deflection limits of L/360 for live load and L/240 for total load. The VLT panel's self-weight is included.
- Bearing lengths
  - Bearing is required across the full width of the beam.
  - Bearing lengths shown are the minimum required at end and interior supports in inches.
  - Bearing lengths are based on the compressive strength, perpendicular-to-grain, of the beam material. Longer end bearings are typically required for adequate fastener end and edge distances and/or fire protection.
- Table assumes:
  - Lateral support at each support and continuously along compression edges of the beam.
  - Load duration factor of 1.0.
  - Spans measured center-line to center-line of supports.
  - Worst case of single or multiple spans.
  - Maximum total length of 60' per manufacturing capabilities.
- For fire-resistent designs, use char rate calculation per the NDS. Contact Boise Cascade engineering for more information.
- Loads shown are intended for preliminary design purposes only. Analysis using appropriate software may result in higher allowable loads than shown.

Floor Spans — 1.0 Duration [PLF]

Span	Load Types and Min. Bearing	10⅜" (10.375") Width							12⅛" (12.125") Width						
		Beam Depth							Beam Depth						
		◆ 9½" (9.50")	◆ 11⅞" (11.875")	◆ 16" (16.00")	18" (18.00")	◆ 24" (24.00")	30" (30.00")	36" (36.00")	◆ 11⅞" (11.875")	◆ 16" (16.00")	18" (18.00")	◆ 24" (24.00")	30" (30.00")	36" (36.00")	◆ 48" (48.00")
10'	Total	2,379	3,481	5,022	5,849	8,724	12,370	12,977	4,069	5,869	6,836	10,196	14,457	15,165	15,128
	Live	1,603	2,983	-	-	-	-	-	3,486	-	-	-	-	-	-
	Min. End/Int. Brg [in]	2.2 / 5.5	3.2 / 8.1	4.6 / 11.6	5.4 / 13.5	8.1 / 20.2	11.4 / 28.6	12 / 30	3.2 / 8.1	4.6 / 11.6	5.4 / 13.5	8.1 / 20.2	11.4 / 28.6	12 / 30	12 / 30
12'	Total	1,404	2,514	3,995	4,621	6,727	9,258	10,798	2,938	4,669	5,400	7,862	10,819	12,619	12,582
	Live	953	1,798	-	-	-	-	-	2,101	-	-	-	-	-	-
	Min. End/Int. Brg [in]	1.6 / 3.9	2.8 / 7	4.4 / 11.1	5.1 / 12.9	7.5 / 18.7	10.3 / 25.7	12 / 30	2.8 / 7	4.4 / 11.1	5.1 / 12.9	7.5 / 18.7	10.3 / 25.7	12 / 30	12 / 30
14'	Total	890	1,711	3,156	3,816	5,469	7,390	9,242	1,999	3,688	4,459	6,392	8,637	10,800	10,763
	Live	610	1,162	2,685	3,703	-	-	-	1,357	3,138	4,327	-	-	-	-
	Min. End/Int. Brg [in]	1.5 / 3	2.2 / 5.6	4.1 / 10.3	5 / 12.4	7.1 / 17.8	9.6 / 24	12 / 30	2.2 / 5.6	4.1 / 10.3	5 / 12.4	7.1 / 17.8	9.6 / 24	12 / 30	12 / 30
16'	Total	595	1,155	2,406	2,979	4,605	6,145	7,908	1,350	2,812	3,482	5,381	7,182	9,241	9,399
	Live	413	791	1,852	2,571	-	-	-	925	2,164	3,005	-	-	-	-
	Min. End/Int. Brg [in]	1.5 / 3	1.7 / 4.4	3.6 / 9	4.4 / 11.1	6.9 / 17.1	9.1 / 22.9	11.8 / 29.4	1.7 / 4.4	3.6 / 9	4.4 / 11.1	6.9 / 17.1	9.1 / 22.9	11.8 / 29.4	12 / 30
18'	Total	414	812	1,892	2,344	3,950	5,256	6,695	949	2,211	2,739	4,617	6,142	7,824	8,338
	Live	293	562	1,327	1,852	-	-	-	657	1,551	2,164	-	-	-	-
	Min. End/Int. Brg [in]	1.5 / 3	1.5 / 3.5	3.2 / 8	4 / 9.9	6.6 / 16.6	8.8 / 22	11.2 / 28.1	1.5 / 3.5	3.2 / 8	4 / 9.9	6.6 / 16.6	8.8 / 22	11.2 / 28.1	12 / 30
20'	Total	296	588	1,431	1,889	3,188	4,589	5,801	688	1,672	2,208	3,725	5,363	6,780	7,489
	Live	214	413	982	1,375	3,070	-	-	483	1,148	1,607	3,588	-	-	-
	Min. End/Int. Brg [in]	1.5 / 3	1.5 / 3	2.7 / 6.8	3.6 / 8.9	6 / 14.9	8.6 / 21.4	10.8 / 27.1	1.5 / 3	2.7 / 6.8	3.6 / 8.9	6 / 14.9	8.6 / 21.4	10.8 / 27.1	12 / 30
22'	Total	217	437	1,077	1,524	2,623	3,936	5,116	511	1,258	1,780	3,066	4,599	5,979	6,795
	Live	162	313	746	1,048	2,361	-	-	365	872	1,224	2,759	-	-	-
	Min. End/Int. Brg [in]	1.5 / 3	1.5 / 3	2.3 / 5.7	3.2 / 7.9	5.4 / 13.6	8.1 / 20.3	10.5 / 26.3	1.5 / 3	2.3 / 5.7	3.2 / 7.9	5.4 / 13.6	8.1 / 20.3	10.5 / 26.3	12 / 30
24'	Total	162	331	827	1,175	2,194	3,294	4,573	387	966	1,374	2,564	3,850	5,344	6,216
	Live	125	242	580	816	1,852	-	-	283	678	953	2,164	-	-	-
	Min. End/Int. Brg [in]	1.5 / 3	1.5 / 3	1.9 / 4.8	2.7 / 6.7	5 / 12.4	7.4 / 18.6	10.3 / 25.7	1.5 / 3	1.9 / 4.8	2.7 / 6.7	5 / 12.4	7.4 / 18.6	10.3 / 25.7	12 / 30
26'	Total	123	255	646	922	1,860	2,795	3,896	298	755	1,078	2,174	3,266	4,553	5,726
	Live	99	191	459	647	1,478	2,757	-	223	536	756	1,727	3,222	-	-
	Min. End/Int. Brg [in]	1.5 / 3	1.5 / 3	1.6 / 4.1	2.3 / 5.8	4.6 / 11.5	6.9 / 17.2	9.5 / 23.8	1.5 / 3	1.6 / 4.1	2.3 / 5.8	4.6 / 11.5	6.9 / 17.2	9.5 / 23.8	12 / 30
28'	Total	93	198	512	734	1,595	2,399	3,346	232	598	858	1,864	2,804	3,910	5,307
	Live	79	153	370	521	1,197	2,246	-	179	432	609	1,399	2,624	-	-
	Min. End/Int. Brg [in]	1.5 / 3	1.5 / 3	1.5 / 3.6	2 / 5	4.3 / 10.7	6.4 / 15.9	8.8 / 22.1	1.5 / 3	1.5 / 3.6	2 / 5	4.3 / 10.7	6.4 / 15.9	8.8 / 22.1	12 / 30
30'	Total	71	156	410	591	1,381	2,079	2,902	182	479	691	1,614	2,430	3,392	4,943
	Live	64	125	302	426	982	1,852	-	146	353	498	1,148	2,164	-	-
	Min. End/Int. Brg [in]	1.5 / 3	1.5 / 3	1.5 / 3.1	1.8 / 4.4	4 / 9.9	5.9 / 14.9	8.3 / 20.6	1.5 / 3	1.5 / 3.1	1.8 / 4.4	4 / 9.9	5.9 / 14.9	8.3 / 20.6	12 / 30

◆ Optimized Fiber Usage, Minimum Waste Size. DfMA - Design for Manufacturing and Assembly

NOTES

- Span loads are limited by shear, moment, or deflection limits of L/360 for live load and L/240 for total load. The VLT panel's self-weight is included.
- Bearing lengths
  - Bearing is required across the full width of the beam.
  - Bearing lengths shown are the minimum required at end and interior supports in inches.
  - Bearing lengths are based on the compressive strength, perpendicular-to-grain, of the beam material. Longer end bearings are typically required for adequate fastener end and edge distances and/or fire protection.
- Table assumes:
  - Lateral support at each support and continuously along compression edges of the beam.
  - Load duration factor of 1.0.
  - Spans measured center-line to center-line of supports.
  - Worst case of single or multiple spans.
  - Maximum total length of 60' per manufacturing capabilities.
- For fire-resistent designs, use char rate calculation per the NDS. Contact Boise Cascade engineering for more information.
- Loads shown are intended for preliminary design purposes only. Analysis using appropriate software may result in higher allowable loads than shown.

Floor Spans — 1.0 Duration [PLF]

Span	Load Types and Min. Bearing	15½" (15.50") Width							19⅞" (19.875") Width					
		Beam Depth							Beam Depth					
		◆ 11⅞" (11.875")	◆ 16" (16.00")	18" (18.00")	◆ 24" (24.00")	30" (30.00")	36" (36.00")	◆ 48" (48.00")	18" (18.00")	◆ 24" (24.00")	30" (30.00")	36" (36.00")	40" (40.00")	◆ 48" (48.00")
10'	Total	5,201	7,502	8,739	13,034	18,481	19,387	19,339	11,205	16,713	23,697	24,859	24,838	24,797
	Live	4,457	-	-	-	-	-	-	-	-	-	-	-	-
	Min. End/Int. Brg [in]	3.2 / 8.1	4.6 / 11.6	5.4 / 13.5	8.1 / 20.2	11.4 / 28.6	12 / 30	12 / 30	5.4 / 13.5	8.1 / 20.2	11.4 / 28.6	12 / 30	12 / 30	12 / 30
12'	Total	3,755	5,969	6,903	10,050	13,831	16,132	16,084	8,852	12,887	17,734	20,685	20,664	20,624
	Live	2,686	-	-	-	-	-	-	-	-	-	-	-	-
	Min. End/Int. Brg [in]	2.8 / 7	4.4 / 11.1	5.1 / 12.9	7.5 / 18.7	10.3 / 25.7	12 / 30	12 / 30	5.1 / 12.9	7.5 / 18.7	10.3 / 25.7	12 / 30	12 / 30	12 / 30
14'	Total	2,556	4,715	5,701	8,171	11,041	13,807	13,759	7,310	10,477	14,157	17,704	17,683	17,642
	Live	1,735	4,011	5,532	-	-	-	-	7,093	-	-	-	-	-
	Min. End/Int. Brg [in]	2.2 / 5.6	4.1 / 10.3	5 / 12.4	7.1 / 17.8	9.6 / 24	12 / 30	12 / 30	5 / 12.4	7.1 / 17.8	9.6 / 24	12 / 30	12 / 30	12 / 30
16'	Total	1,726	3,595	4,451	6,879	9,181	11,814	12,015	5,707	8,821	11,772	15,148	15,447	15,406
	Live	1,182	2,767	3,841	-	-	-	-	4,925	-	-	-	-	-
	Min. End/Int. Brg [in]	1.7 / 4.4	3.6 / 9	4.4 / 11.1	6.9 / 17.1	9.1 / 22.9	11.8 / 29.4	12 / 30	4.4 / 11.1	6.9 / 17.1	9.1 / 22.9	11.8 / 29.4	12 / 30	12 / 30
18'	Total	1,213	2,827	3,501	5,902	7,852	10,002	10,659	4,490	7,567	10,068	12,825	13,708	13,667
	Live	840	1,983	2,767	-	-	-	-	3,548	-	-	-	-	-
	Min. End/Int. Brg [in]	1.5 / 3.5	3.2 / 8	4 / 9.9	6.6 / 16.6	8.8 / 22	11.2 / 28.1	12 / 30	4 / 9.9	6.6 / 16.6	8.8 / 22	11.2 / 28.1	12 / 30	12 / 30
20'	Total	879	2,137	2,823	4,762	6,856	8,667	9,574	3,619	6,106	8,791	11,114	12,317	12,276
	Live	618	1,467	2,054	4,586	-	-	-	2,634	5,881	-	-	-	-
	Min. End/Int. Brg [in]	1.5 / 3	2.7 / 6.8	3.6 / 8.9	6 / 14.9	8.6 / 21.4	10.8 / 27.1	12 / 30	3.6 / 8.9	6 / 14.9	8.6 / 21.4	10.8 / 27.1	12 / 30	12 / 30
22'	Total	653	1,609	2,276	3,919	5,880	7,643	8,686	2,919	5,025	7,539	9,800	11,179	11,138
	Live	467	1,115	1,565	3,527	-	-	-	2,007	4,523	-	-	-	-
	Min. End/Int. Brg [in]	1.5 / 3	2.3 / 5.7	3.2 / 7.9	5.4 / 13.6	8.1 / 20.3	10.5 / 26.3	12 / 30	3.2 / 7.9	5.4 / 13.6	8.1 / 20.3	10.5 / 26.3	12 / 30	12 / 30
24'	Total	495	1,235	1,756	3,278	4,921	6,832	7,946	2,252	4,203	6,310	8,760	10,017	10,189
	Live	361	866	1,219	2,767	-	-	-	1,563	3,548	-	-	-	-
	Min. End/Int. Brg [in]	1.5 / 3	1.9 / 4.8	2.7 / 6.7	5 / 12.4	7.4 / 18.6	10.3 / 25.7	12 / 30	2.7 / 6.7	5 / 12.4	7.4 / 18.6	10.3 / 25.7	11.8 / 29.4	12 / 30
26'	Total	381	965	1,378	2,779	4,176	5,820	7,320	1,767	3,563	5,354	7,463	9,028	9,387
	Live	285	686	967	2,207	4,119	-	-	1,239	2,831	5,281	-	-	-
	Min. End/Int. Brg [in]	1.5 / 3	1.6 / 4.1	2.3 / 5.8	4.6 / 11.5	6.9 / 17.2	9.5 / 23.8	12 / 30	2.3 / 5.8	4.6 / 11.5	6.9 / 17.2	9.5 / 23.8	11.5 / 28.8	12 / 30
28'	Total	296	764	1,097	2,383	3,584	4,999	6,784	1,407	3,055	4,596	6,410	7,766	8,699
	Live	229	552	779	1,788	3,355	-	-	999	2,293	4,302	-	-	-
	Min. End/Int. Brg [in]	1.5 / 3	1.5 / 3.6	2 / 5	4.3 / 10.7	6.4 / 15.9	8.8 / 22.1	12 / 30	2 / 5	4.3 / 10.7	6.4 / 15.9	8.8 / 22.1	10.7 / 26.7	12 / 30
30'	Total	233	612	884	2,063	3,107	4,336	6,319	1,133	2,646	3,984	5,560	6,739	8,102
	Live	187	451	637	1,467	2,767	-	-	817	1,882	3,548	-	-	-
	Min. End/Int. Brg [in]	1.5 / 3	1.5 / 3.1	1.8 / 4.4	4 / 9.9	5.9 / 14.9	8.3 / 20.6	12 / 30	1.8 / 4.4	4 / 9.9	5.9 / 14.9	8.3 / 20.6	10 / 25	12 / 30

◆ Optimized Fiber Usage, Minimum Waste Size. DfMA - Design for Manufacturing and Assembly

NOTES

- Span loads are limited by shear, moment, or deflection limits of L/360 for live load and L/240 for total load. The VLT panel's self-weight is included.
- Bearing lengths
  - Bearing is required across the full width of the beam.
  - Bearing lengths shown are the minimum required at end and interior supports in inches.
  - Bearing lengths are based on the compressive strength, perpendicular-to-grain, of the beam material. Longer end bearings are typically required for adequate fastener end and edge distances and/or fire protection.
- Table assumes:
  - Lateral support at each support and continuously along compression edges of the beam.
  - Load duration factor of 1.0.
  - Spans measured center-line to center-line of supports.
  - Worst case of single or multiple spans.
  - Maximum total length of 60' per manufacturing capabilities.
- For fire-resistent designs, use char rate calculation per the NDS. Contact Boise Cascade engineering for more information.
- Loads shown are intended for preliminary design purposes only. Analysis using appropriate software may result in higher allowable loads than shown.

Boise Cascade® ENGINEERED WOOD PRODUCTS

Floor Spans — 1.0 Duration [PLF]

Span	Load Types and Min. Bearing	23⅜" (23.375") Width					
		Beam Depth					
		18" (18.00")	◆ 24" (24.00")	30" (30.00")	36" (36.00")	40" (40.00")	◆ 48" (48.00")
10'	Total	13,179	19,656	27,870	29,236	29,212	29,164
	Live	-	-	-	-	-	-
	Min. End/Int. Brg [in]	5.4 / 13.5	8.1 / 20.2	11.4 / 28.6	12 / 30	12 / 30	12 / 30
12'	Total	10,411	15,156	20,857	24,328	24,304	24,255
	Live	-	-	-	-	-	-
	Min. End/Int. Brg [in]	5.1 / 12.9	7.5 / 18.7	10.3 / 25.7	12 / 30	12 / 30	12 / 30
14'	Total	8,597	12,323	16,650	20,821	20,797	20,749
	Live	8,342	-	-	-	-	-
	Min. End/Int. Brg [in]	5 / 12.4	7.1 / 17.8	9.6 / 24	12 / 30	12 / 30	12 / 30
16'	Total	6,712	10,375	13,845	17,816	18,168	18,120
	Live	5,792	-	-	-	-	-
	Min. End/Int. Brg [in]	4.4 / 11.1	6.9 / 17.1	9.1 / 22.9	11.8 / 29.4	12 / 30	12 / 30
18'	Total	5,280	8,900	11,841	15,084	16,122	16,074
	Live	4,172	-	-	-	-	-
	Min. End/Int. Brg [in]	4 / 9.9	6.6 / 16.6	8.8 / 22	11.2 / 28.1	12 / 30	12 / 30
20'	Total	4,257	7,182	10,339	13,071	14,486	14,438
	Live	3,098	6,916	-	-	-	-
	Min. End/Int. Brg [in]	3.6 / 8.9	6 / 14.9	8.6 / 21.4	10.8 / 27.1	12 / 30	12 / 30
22'	Total	3,432	5,910	8,867	11,526	13,147	13,099
	Live	2,360	5,319	-	-	-	-
	Min. End/Int. Brg [in]	3.2 / 7.9	5.4 / 13.6	8.1 / 20.3	10.5 / 26.3	12 / 30	12 / 30
24'	Total	2,648	4,943	7,422	10,303	11,781	11,984
	Live	1,838	4,172	-	-	-	-
	Min. End/Int. Brg [in]	2.7 / 6.7	5 / 12.4	7.4 / 18.6	10.3 / 25.7	11.8 / 29.4	12 / 30
26'	Total	2,078	4,191	6,297	8,777	10,618	11,040
	Live	1,458	3,329	6,211	-	-	-
	Min. End/Int. Brg [in]	2.3 / 5.8	4.6 / 11.5	6.9 / 17.2	9.5 / 23.8	11.5 / 28.8	12 / 30
28'	Total	1,654	3,593	5,405	7,538	9,134	10,230
	Live	1,175	2,696	5,060	-	-	-
	Min. End/Int. Brg [in]	2 / 5	4.3 / 10.7	6.4 / 15.9	8.8 / 22.1	10.7 / 26.7	12 / 30
30'	Total	1,333	3,112	4,685	6,539	7,925	9,529
	Live	960	2,213	4,172	-	-	-
	Min. End/Int. Brg [in]	1.8 / 4.4	4 / 9.9	5.9 / 14.9	8.3 / 20.6	10 / 25	12 / 30

◆ Optimized Fiber Usage, Minimum Waste Size. DfMA - Design for Manufacturing and Assembly

NOTES

- Span loads are limited by shear, moment, or deflection limits of L/360 for live load and L/240 for total load. The VLT panel's self-weight is included.
- Bearing lengths
  - Bearing is required across the full width of the beam.
  - Bearing lengths shown are the minimum required at end and interior supports in inches.
  - Bearing lengths are based on the compressive strength, perpendicular-to-grain, of the beam material. Longer end bearings are typically required for adequate fastener end and edge distances and/or fire protection.
- Table assumes:
  - Lateral support at each support and continuously along compression edges of the beam.
  - Load duration factor of 1.0.
  - Spans measured center-line to center-line of supports.
  - Worst case of single or multiple spans.
  - Maximum total length of 60' per manufacturing capabilities.
- For fire-resistent designs, use char rate calculation per the NDS. Contact Boise Cascade engineering for more information.
- Loads shown are intended for preliminary design purposes only. Analysis using appropriate software may result in higher allowable loads than shown.

Roof - Snow Spans — 1.15 Duration [PLF]

Span	Load Types and Min. Bearing	5¼" (5.25") Width						7¾" (7.75") Width						
		Beam Depth						Beam Depth						
		◆ 9½" (9.50")	◆ 11⅞" (11.875")	◆ 16" (16.00")	18" (18.00")	◆ 24" (24.00")	30" (30.00")	◆ 9½" (9.50")	◆ 11⅞" (11.875")	◆ 16" (16.00")	18" (18.00")	◆ 24" (24.00")	30" (30.00")	36" (36.00")
10'	Total	1,415	2,028	2,926	3,408	5,082	6,575	2,088	2,994	4,319	5,030	7,502	9,705	9,693
	Live	1,217	-	-	-	-	-	1,796	-	-	-	-	-	-
	Min. End/Int. Brg [in]	2.6 / 6.5	3.7 / 9.3	5.3 / 13.4	6.2 / 15.6	9.3 / 23.2	12 / 30	2.6 / 6.5	3.7 / 9.3	5.3 / 13.4	6.2 / 15.6	9.3 / 23.2	12 / 30	12 / 30
12'	Total	952	1,465	2,328	2,693	3,919	5,393	1,405	2,163	3,437	3,975	5,786	7,962	8,066
	Live	723	1,365	-	-	-	-	1,068	2,015	-	-	-	-	-
	Min. End/Int. Brg [in]	2.1 / 5.2	3.2 / 8.1	5.1 / 12.8	5.9 / 14.8	8.6 / 21.5	11.8 / 29.6	2.1 / 5.2	3.2 / 8.1	5.1 / 12.8	5.9 / 14.8	8.6 / 21.5	11.8 / 29.6	12 / 30
14'	Total	605	1,072	1,840	2,224	3,188	4,307	893	1,583	2,716	3,283	4,706	6,357	6,903
	Live	463	882	-	-	-	-	684	1,301	-	-	-	-	-
	Min. End/Int. Brg [in]	1.6 / 3.9	2.8 / 6.9	4.7 / 11.8	5.7 / 14.3	8.2 / 20.4	11 / 27.6	1.6 / 3.9	2.8 / 6.9	4.7 / 11.8	5.7 / 14.3	8.2 / 20.4	11 / 27.6	12 / 30
16'	Total	406	785	1,403	1,737	2,685	3,582	599	1,159	2,072	2,564	3,963	5,288	6,031
	Live	314	601	-	-	-	-	463	887	-	-	-	-	-
	Min. End/Int. Brg [in]	1.5 / 3	2.3 / 5.8	4.1 / 10.3	5.1 / 12.8	7.9 / 19.7	10.5 / 26.3	1.5 / 3	2.3 / 5.8	4.1 / 10.3	5.1 / 12.8	7.9 / 19.7	10.5 / 26.3	12 / 30
18'	Total	283	553	1,104	1,368	2,304	3,065	418	816	1,630	2,019	3,401	4,524	5,353
	Live	222	427	1,008	-	-	-	328	630	1,487	-	-	-	-
	Min. End/Int. Brg [in]	1.5 / 3	1.9 / 4.6	3.7 / 9.2	4.5 / 11.4	7.6 / 19.1	10.1 / 25.3	1.5 / 3	1.9 / 4.6	3.7 / 9.2	4.5 / 11.4	7.6 / 19.1	10.1 / 25.3	12 / 30
20'	Total	204	402	890	1,103	1,860	2,676	302	594	1,314	1,628	2,745	3,951	4,811
	Live	163	314	746	1,044	-	-	240	463	1,101	1,541	-	-	-
	Min. End/Int. Brg [in]	1.5 / 3	1.5 / 3.8	3.3 / 8.3	4.1 / 10.2	6.9 / 17.2	9.9 / 24.6	1.5 / 3	1.5 / 3.8	3.3 / 8.3	4.1 / 10.2	6.9 / 17.2	9.9 / 24.6	12 / 30
22'	Total	151	300	732	907	1,531	2,296	223	443	1,081	1,340	2,261	3,390	4,367
	Live	123	237	566	795	-	-	181	350	836	1,174	-	-	-
	Min. End/Int. Brg [in]	1.5 / 3	1.5 / 3.2	3 / 7.5	3.7 / 9.3	6.2 / 15.6	9.3 / 23.3	1.5 / 3	1.5 / 3.2	3 / 7.5	3.7 / 9.3	6.2 / 15.6	9.3 / 23.3	12 / 30
24'	Total	114	229	565	759	1,282	1,923	168	338	834	1,120	1,892	2,839	3,939
	Live	95	184	440	619	-	-	140	271	650	914	-	-	-
	Min. End/Int. Brg [in]	1.5 / 3	1.5 / 3	2.6 / 6.4	3.4 / 8.5	5.7 / 14.3	8.5 / 21.4	1.5 / 3	1.5 / 3	2.6 / 6.4	3.4 / 8.5	5.7 / 14.3	8.5 / 21.4	11.8 / 29.6
26'	Total	87	177	443	630	1,087	1,633	128	262	654	931	1,605	2,410	3,357
	Live	75	145	348	491	-	-	110	214	514	725	-	-	-
	Min. End/Int. Brg [in]	1.5 / 3	1.5 / 3	2.2 / 5.5	3.1 / 7.7	5.3 / 13.2	7.9 / 19.7	1.5 / 3	1.5 / 3	2.2 / 5.5	3.1 / 7.7	5.3 / 13.2	7.9 / 19.7	11 / 27.4
28'	Total	67	139	352	503	933	1,402	99	206	520	743	1,377	2,070	2,885
	Live	60	116	280	396	908	-	89	172	414	584	1,341	-	-
	Min. End/Int. Brg [in]	1.5 / 3	1.5 / 3	1.9 / 4.7	2.7 / 6.7	4.9 / 12.3	7.3 / 18.3	1.5 / 3	1.5 / 3	1.9 / 4.7	2.7 / 6.7	4.9 / 12.3	7.3 / 18.3	10.2 / 25.4
30'	Total	52	111	284	407	809	1,216	77	163	419	601	1,194	1,795	2,504
	Live	49	95	229	324	746	-	72	140	338	478	1,101	-	-
	Min. End/Int. Brg [in]	1.5 / 3	1.5 / 3	1.7 / 4.2	2.3 / 5.9	4.6 / 11.4	6.8 / 17.1	1.5 / 3	1.5 / 3	1.7 / 4.2	2.3 / 5.9	4.6 / 11.4	6.8 / 17.1	9.5 / 23.7

◆ Optimized Fiber Usage, Minimum Waste Size. DfMA - Design for Manufacturing and Assembly

NOTES

- Span loads are limited by shear, moment, or deflection limits of L/240 for live load and L/180 for total load. The beam's self-weight is included.
- Bearing lengths
  - Bearing is required across the full width of the beam.
  - Bearing lengths shown are the minimum required at end and interior supports in inches.
  - Bearing lengths are based on the compressive strength, perpendicular-to-grain, of the beam material. Longer end bearings are typically required for adequate fastener end and edge distances and/or fire protection.
- Table assumes:
  - Lateral support at each support and continuously along compression edges of the beam.
  - Load duration factor of 1.15.
  - Spans measured center-line to center-line of supports.
  - Worst case of single or multiple spans.
  - Maximum total length of 60' per manufacturing capabilities.
- For fire-resistent designs, use char rate calculation per the NDS. Contact Boise Cascade engineering for more information.
- Loads shown are intended for preliminary design purposes only. Analysis using appropriate software may result in higher allowable loads than shown.

Boise Cascade® ENGINEERED WOOD PRODUCTS

Roof - Snow Spans — 1.15 Duration [PLF]

Span	Load Types and Min. Bearing	10⅜" (10.375") Width							12⅛" (12.125") Width						
		Beam Depth							Beam Depth						
		◆ 9½" (9.50")	◆ 11⅞" (11.875")	◆ 16" (16.00")	18" (18.00")	◆ 24" (24.00")	30" (30.00")	36" (36.00")	◆ 11⅞" (11.875")	◆ 16" (16.00")	18" (18.00")	◆ 24" (24.00")	30" (30.00")	36" (36.00")	◆ 48" (48.00")
10'	Total	2,795	4,008	5,781	6,734	10,042	12,993	12,977	4,685	6,757	7,870	11,736	15,184	15,165	15,128
	Live	2,404	-	-	-	-	-	-	-	-	-	-	-	-	-
	Min. End/Int. Brg [in]	2.6 / 6.5	3.7 / 9.3	5.3 / 13.4	6.2 / 15.6	9.3 / 23.2	12 / 30	12 / 30	3.7 / 9.3	5.3 / 13.4	6.2 / 15.6	9.3 / 23.2	12 / 30	12 / 30	12 / 30
12'	Total	1,881	2,895	4,601	5,321	7,746	10,658	10,798	3,384	5,377	6,219	9,052	12,456	12,619	12,582
	Live	1,430	2,697	-	-	-	-	-	3,152	-	-	-	-	-	-
	Min. End/Int. Brg [in]	2.1 / 5.2	3.2 / 8.1	5.1 / 12.8	5.9 / 14.8	8.6 / 21.5	11.8 / 29.6	12 / 30	3.2 / 8.1	5.1 / 12.8	5.9 / 14.8	8.6 / 21.5	11.8 / 29.6	12 / 30	12 / 30
14'	Total	1,195	2,119	3,635	4,395	6,299	8,511	9,242	2,476	4,249	5,137	7,362	9,946	10,800	10,763
	Live	916	1,742	-	-	-	-	-	2,036	-	-	-	-	-	-
	Min. End/Int. Brg [in]	1.6 / 3.9	2.8 / 6.9	4.7 / 11.8	5.7 / 14.3	8.2 / 20.4	11 / 27.6	12 / 30	2.8 / 6.9	4.7 / 11.8	5.7 / 14.3	8.2 / 20.4	11 / 27.6	12 / 30	12 / 30
16'	Total	802	1,551	2,773	3,433	5,305	7,079	8,074	1,813	3,241	4,012	6,200	8,273	9,436	9,399
	Live	620	1,187	-	-	-	-	-	1,387	-	-	-	-	-	-
	Min. End/Int. Brg [in]	1.5 / 3	2.3 / 5.8	4.1 / 10.3	5.1 / 12.8	7.9 / 19.7	10.5 / 26.3	12 / 30	2.3 / 5.8	4.1 / 10.3	5.1 / 12.8	7.9 / 19.7	10.5 / 26.3	12 / 30	12 / 30
18'	Total	560	1,093	2,182	2,702	4,552	6,056	7,167	1,277	2,550	3,158	5,320	7,078	8,375	8,338
	Live	439	844	1,991	-	-	-	-	986	2,327	-	-	-	-	-
	Min. End/Int. Brg [in]	1.5 / 3	1.9 / 4.6	3.7 / 9.2	4.5 / 11.4	7.6 / 19.1	10.1 / 25.3	12 / 30	1.9 / 4.6	3.7 / 9.2	4.5 / 11.4	7.6 / 19.1	10.1 / 25.3	12 / 30	12 / 30
20'	Total	404	795	1,760	2,180	3,675	5,289	6,440	929	2,056	2,548	4,295	6,181	7,527	7,489
	Live	322	620	1,473	2,063	-	-	-	725	1,722	2,411	-	-	-	-
	Min. End/Int. Brg [in]	1.5 / 3	1.5 / 3.8	3.3 / 8.3	4.1 / 10.2	6.9 / 17.2	9.9 / 24.6	12 / 30	1.5 / 3.8	3.3 / 8.3	4.1 / 10.2	6.9 / 17.2	9.9 / 24.6	12 / 30	12 / 30
22'	Total	298	594	1,447	1,793	3,026	4,538	5,846	694	1,691	2,096	3,537	5,303	6,832	6,795
	Live	243	469	1,119	1,571	-	-	-	548	1,308	1,837	-	-	-	-
	Min. End/Int. Brg [in]	1.5 / 3	1.5 / 3.2	3 / 7.5	3.7 / 9.3	6.2 / 15.6	9.3 / 23.3	12 / 30	1.5 / 3.2	3 / 7.5	3.7 / 9.3	6.2 / 15.6	9.3 / 23.3	12 / 30	12 / 30
24'	Total	225	452	1,117	1,499	2,533	3,800	5,273	528	1,305	1,752	2,960	4,441	6,163	6,216
	Live	188	363	870	1,223	-	-	-	424	1,016	1,430	-	-	-	-
	Min. End/Int. Brg [in]	1.5 / 3	1.5 / 3	2.6 / 6.4	3.4 / 8.5	5.7 / 14.3	8.5 / 21.4	11.8 / 29.6	1.5 / 3	2.6 / 6.4	3.4 / 8.5	5.7 / 14.3	8.5 / 21.4	11.8 / 29.6	12 / 30
26'	Total	172	350	875	1,246	2,149	3,226	4,495	409	1,023	1,456	2,511	3,770	5,253	5,726
	Live	148	287	689	970	-	-	-	335	805	1,134	-	-	-	-
	Min. End/Int. Brg [in]	1.5 / 3	1.5 / 3	2.2 / 5.5	3.1 / 7.7	5.3 / 13.2	7.9 / 19.7	11 / 27.4	1.5 / 3	2.2 / 5.5	3.1 / 7.7	5.3 / 13.2	7.9 / 19.7	11 / 27.4	12 / 30
28'	Total	133	275	696	995	1,844	2,771	3,862	322	814	1,163	2,155	3,238	4,514	5,307
	Live	119	230	554	782	1,795	-	-	269	648	914	2,098	-	-	-
	Min. End/Int. Brg [in]	1.5 / 3	1.5 / 3	1.9 / 4.7	2.7 / 6.7	4.9 / 12.3	7.3 / 18.3	10.2 / 25.4	1.5 / 3	1.9 / 4.7	2.7 / 6.7	4.9 / 12.3	7.3 / 18.3	10.2 / 25.4	12 / 30
30'	Total	103	218	561	805	1,598	2,403	3,352	255	655	940	1,867	2,809	3,917	4,943
	Live	97	188	453	639	1,473	-	-	219	529	747	1,722	-	-	-
	Min. End/Int. Brg [in]	1.5 / 3	1.5 / 3	1.7 / 4.2	2.3 / 5.9	4.6 / 11.4	6.8 / 17.1	9.5 / 23.7	1.5 / 3	1.7 / 4.2	2.3 / 5.9	4.6 / 11.4	6.8 / 17.1	9.5 / 23.7	12 / 30

◆ Optimized Fiber Usage, Minimum Waste Size. DfMA - Design for Manufacturing and Assembly

NOTES

- Span loads are limited by shear, moment, or deflection limits of L/240 for live load and L/180 for total load. The beam's self-weight is included.
- Bearing lengths
  - Bearing is required across the full width of the beam.
  - Bearing lengths shown are the minimum required at end and interior supports in inches.
  - Bearing lengths are based on the compressive strength, perpendicular-to-grain, of the beam material. Longer end bearings are typically required for adequate fastener end and edge distances and/or fire protection.
- Table assumes:
  - Lateral support at each support and continuously along compression edges of the beam.
  - Load duration factor of 1.15.
  - Spans measured center-line to center-line of supports.
  - Worst case of single or multiple spans.
  - Maximum total length of 60' per manufacturing capabilities.
- For fire-resistent designs, use char rate calculation per the NDS. Contact Boise Cascade engineering for more information.
- Loads shown are intended for preliminary design purposes only. Analysis using appropriate software may result in higher allowable loads than shown.

Roof - Snow Spans — 1.15 Duration [PLF]

Span	Load Types and Min. Bearing	15½" (15.50") Width							19⅞" (19.875") Width					
		Beam Depth							Beam Depth					
		◆ 11⅞" (11.875")	◆ 16" (16.00")	18" (18.00")	◆ 24" (24.00")	30" (30.00")	36" (36.00")	◆ 48" (48.00")	18" (18.00")	◆ 24" (24.00")	30" (30.00")	36" (36.00")	40" (40.00")	◆ 48" (48.00")
10'	Total	5,988	8,637	10,060	15,003	19,411	19,387	19,339	12,900	19,238	24,889	24,859	24,838	24,797
	Live	-	-	-	-	-	-	-	-	-	-	-	-	-
	Min. End/Int. Brg [in]	3.7 / 9.3	5.3 / 13.4	6.2 / 15.6	9.3 / 23.2	12 / 30	12 / 30	12 / 30	6.2 / 15.6	9.3 / 23.2	12 / 30	12 / 30	12 / 30	12 / 30
12'	Total	4,326	6,874	7,950	11,572	15,923	16,132	16,084	10,193	14,838	20,417	20,685	20,664	20,624
	Live	4,030	-	-	-	-	-	-	-	-	-	-	-	-
	Min. End/Int. Brg [in]	3.2 / 8.1	5.1 / 12.8	5.9 / 14.8	8.6 / 21.5	11.8 / 29.6	12 / 30	12 / 30	5.9 / 14.8	8.6 / 21.5	11.8 / 29.6	12 / 30	12 / 30	12 / 30
14'	Total	3,166	5,431	6,567	9,411	12,715	13,807	13,759	8,420	12,067	16,303	17,704	17,683	17,642
	Live	2,603	-	-	-	-	-	-	-	-	-	-	-	-
	Min. End/Int. Brg [in]	2.8 / 6.9	4.7 / 11.8	5.7 / 14.3	8.2 / 20.4	11 / 27.6	12 / 30	12 / 30	5.7 / 14.3	8.2 / 20.4	11 / 27.6	12 / 30	12 / 30	12 / 30
16'	Total	2,317	4,143	5,129	7,926	10,576	12,063	12,015	6,577	10,163	13,561	15,468	15,447	15,406
	Live	1,773	-	-	-	-	-	-	-	-	-	-	-	-
	Min. End/Int. Brg [in]	2.3 / 5.8	4.1 / 10.3	5.1 / 12.8	7.9 / 19.7	10.5 / 26.3	12 / 30	12 / 30	5.1 / 12.8	7.9 / 19.7	10.5 / 26.3	12 / 30	12 / 30	12 / 30
18'	Total	1,633	3,260	4,037	6,801	9,048	10,707	10,659	5,177	8,721	11,601	13,729	13,708	13,667
	Live	1,260	2,975	-	-	-	-	-	-	-	-	-	-	-
	Min. End/Int. Brg [in]	1.9 / 4.6	3.7 / 9.2	4.5 / 11.4	7.6 / 19.1	10.1 / 25.3	12 / 30	12 / 30	4.5 / 11.4	7.6 / 19.1	10.1 / 25.3	12 / 30	12 / 30	12 / 30
20'	Total	1,188	2,629	3,257	5,491	7,902	9,622	9,574	4,176	7,041	10,132	12,337	12,317	12,276
	Live	926	2,201	3,082	-	-	-	-	3,952	-	-	-	-	-
	Min. End/Int. Brg [in]	1.5 / 3.8	3.3 / 8.3	4.1 / 10.2	6.9 / 17.2	9.9 / 24.6	12 / 30	12 / 30	4.1 / 10.2	6.9 / 17.2	9.9 / 24.6	12 / 30	12 / 30	12 / 30
22'	Total	887	2,162	2,679	4,521	6,779	8,734	8,686	3,435	5,797	8,693	11,199	11,179	11,138
	Live	700	1,672	2,348	-	-	-	-	3,010	-	-	-	-	-
	Min. End/Int. Brg [in]	1.5 / 3.2	3 / 7.5	3.7 / 9.3	6.2 / 15.6	9.3 / 23.3	12 / 30	12 / 30	3.7 / 9.3	6.2 / 15.6	9.3 / 23.3	12 / 30	12 / 30	12 / 30
24'	Total	676	1,669	2,240	3,784	5,677	7,878	7,946	2,872	4,852	7,280	10,101	10,230	10,189
	Live	542	1,299	1,828	-	-	-	-	2,344	-	-	-	-	-
	Min. End/Int. Brg [in]	1.5 / 3	2.6 / 6.4	3.4 / 8.5	5.7 / 14.3	8.5 / 21.4	11.8 / 29.6	12 / 30	3.4 / 8.5	5.7 / 14.3	8.5 / 21.4	11.8 / 29.6	12 / 30	12 / 30
26'	Total	523	1,308	1,861	3,210	4,820	6,715	7,320	2,387	4,116	6,180	8,610	9,427	9,387
	Live	428	1,029	1,450	-	-	-	-	1,859	-	-	-	-	-
	Min. End/Int. Brg [in]	1.5 / 3	2.2 / 5.5	3.1 / 7.7	5.3 / 13.2	7.9 / 19.7	11 / 27.4	12 / 30	3.1 / 7.7	5.3 / 13.2	7.9 / 19.7	11 / 27.4	12 / 30	12 / 30
28'	Total	411	1,040	1,486	2,755	4,140	5,770	6,784	1,906	3,532	5,308	7,399	8,739	8,699
	Live	344	828	1,169	2,682	-	-	-	1,498	3,439	-	-	-	-
	Min. End/Int. Brg [in]	1.5 / 3	1.9 / 4.7	2.7 / 6.7	4.9 / 12.3	7.3 / 18.3	10.2 / 25.4	12 / 30	2.7 / 6.7	4.9 / 12.3	7.3 / 18.3	10.2 / 25.4	12 / 30	12 / 30
30'	Total	326	838	1,202	2,387	3,591	5,008	6,319	1,541	3,061	4,604	6,421	7,780	8,102
	Live	280	676	955	2,201	-	-	-	1,225	2,822	-	-	-	-
	Min. End/Int. Brg [in]	1.5 / 3	1.7 / 4.2	2.3 / 5.9	4.6 / 11.4	6.8 / 17.1	9.5 / 23.7	12 / 30	2.3 / 5.9	4.6 / 11.4	6.8 / 17.1	9.5 / 23.7	11.5 / 28.7	12 / 30

◆ Optimized Fiber Usage, Minimum Waste Size. DfMA - Design for Manufacturing and Assembly

NOTES

- Span loads are limited by shear, moment, or deflection limits of L/240 for live load and L/180 for total load. The beam's self-weight is included.
- Bearing lengths
  - Bearing is required across the full width of the beam.
  - Bearing lengths shown are the minimum required at end and interior supports in inches.
  - Bearing lengths are based on the compressive strength, perpendicular-to-grain, of the beam material. Longer end bearings are typically required for adequate fastener end and edge distances and/or fire protection.
- Table assumes:
  - Lateral support at each support and continuously along compression edges of the beam.
  - Load duration factor of 1.15.
  - Spans measured center-line to center-line of supports.
  - Worst case of single or multiple spans.
  - Maximum total length of 60' per manufacturing capabilities.
- For fire-resistent designs, use char rate calculation per the NDS. Contact Boise Cascade engineering for more information.
- Loads shown are intended for preliminary design purposes only. Analysis using appropriate software may result in higher allowable loads than shown.

Boise Cascade® ENGINEERED WOOD PRODUCTS

Roof - Snow Spans — 1.15 Duration [PLF]

Span	Load Types and Min. Bearing	23⅜" (23.375") Width					
		Beam Depth					
		18" (18.00")	◆ 24" (24.00")	30" (30.00")	36" (36.00")	40" (40.00")	◆ 48" (48.00")
10'	Total	15,172	22,626	29,272	29,236	29,212	29,164
	Live	-	-	-	-	-	-
	Min. End/Int. Brg [in]	6.2 / 15.6	9.3 / 23.2	12 / 30	12 / 30	12 / 30	12 / 30
12'	Total	11,988	17,451	24,013	24,328	24,304	24,255
	Live	-	-	-	-	-	-
	Min. End/Int. Brg [in]	5.9 / 14.8	8.6 / 21.5	11.8 / 29.6	12 / 30	12 / 30	12 / 30
14'	Total	9,903	14,193	19,174	20,821	20,797	20,749
	Live	-	-	-	-	-	-
	Min. End/Int. Brg [in]	5.7 / 14.3	8.2 / 20.4	11 / 27.6	12 / 30	12 / 30	12 / 30
16'	Total	7,735	11,952	15,949	18,192	18,168	18,120
	Live	-	-	-	-	-	-
	Min. End/Int. Brg [in]	5.1 / 12.8	7.9 / 19.7	10.5 / 26.3	12 / 30	12 / 30	12 / 30
18'	Total	6,089	10,257	13,644	16,146	16,122	16,074
	Live	-	-	-	-	-	-
	Min. End/Int. Brg [in]	4.5 / 11.4	7.6 / 19.1	10.1 / 25.3	12 / 30	12 / 30	12 / 30
20'	Total	4,911	8,280	11,916	14,510	14,486	14,438
	Live	4,647	-	-	-	-	-
	Min. End/Int. Brg [in]	4.1 / 10.2	6.9 / 17.2	9.9 / 24.6	12 / 30	12 / 30	12 / 30
22'	Total	4,040	6,818	10,224	13,171	13,147	13,099
	Live	3,541	-	-	-	-	-
	Min. End/Int. Brg [in]	3.7 / 9.3	6.2 / 15.6	9.3 / 23.3	12 / 30	12 / 30	12 / 30
24'	Total	3,378	5,706	8,562	11,880	12,032	11,984
	Live	2,756	-	-	-	-	-
	Min. End/Int. Brg [in]	3.4 / 8.5	5.7 / 14.3	8.5 / 21.4	11.8 / 29.6	12 / 30	12 / 30
26'	Total	2,807	4,841	7,269	10,126	11,088	11,040
	Live	2,186	-	-	-	-	-
	Min. End/Int. Brg [in]	3.1 / 7.7	5.3 / 13.2	7.9 / 19.7	11 / 27.4	12 / 30	12 / 30
28'	Total	2,242	4,154	6,243	8,702	10,279	10,230
	Live	1,762	4,045	-	-	-	-
	Min. End/Int. Brg [in]	2.7 / 6.7	4.9 / 12.3	7.3 / 18.3	10.2 / 25.4	12 / 30	12 / 30
30'	Total	1,813	3,600	5,415	7,552	9,150	9,529
	Live	1,441	3,319	-	-	-	-
	Min. End/Int. Brg [in]	2.3 / 5.9	4.6 / 11.4	6.8 / 17.1	9.5 / 23.7	11.5 / 28.7	12 / 30

◆ Optimized Fiber Usage, Minimum Waste Size. DfMA - Design for Manufacturing and Assembly

NOTES

- Span loads are limited by shear, moment, or deflection limits of L/240 for live load and L/180 for total load. The beam's self-weight is included.
- Bearing lengths
  - Bearing is required across the full width of the beam.
  - Bearing lengths shown are the minimum required at end and interior supports in inches.
  - Bearing lengths are based on the compressive strength, perpendicular-to-grain, of the beam material. Longer end bearings are typically required for adequate fastener end and edge distances and/or fire protection.
- Table assumes:
  - Lateral support at each support and continuously along compression edges of the beam.
  - Load duration factor of 1.15.
  - Spans measured center-line to center-line of supports.
  - Worst case of single or multiple spans.
  - Maximum total length of 60' per manufacturing capabilities.
- For fire-resistent designs, use char rate calculation per the NDS. Contact Boise Cascade engineering for more information.
- Loads shown are intended for preliminary design purposes only. Analysis using appropriate software may result in higher allowable loads than shown.

Roof - Non-Snow Spans — 1.25 Duration [PLF]

Span	Load Types and Min. Bearing	5¼" (5.25") Width						7¾" (7.75") Width						
		Beam Depth						Beam Depth						
		◆ 9½" (9.50")	◆ 11⅞" (11.875")	◆ 16" (16.00")	18" (18.00")	◆ 24" (24.00")	30" (30.00")	◆ 9½" (9.50")	◆ 11⅞" (11.875")	◆ 16" (16.00")	18" (18.00")	◆ 24" (24.00")	30" (30.00")	36" (36.00")
10'	Total	1,539	2,206	3,182	3,706	5,526	6,575	2,271	3,257	4,697	5,471	8,158	9,705	9,693
	Live	1,217	-	-	-	-	-	1,796	-	-	-	-	-	-
	Min. End/Int. Brg [in]	2.8 / 7	4 / 10.1	5.8 / 14.5	6.8 / 16.9	10.1 / 25.2	12 / 30	2.8 / 7	4 / 10.1	5.8 / 14.5	6.8 / 16.9	10.1 / 25.2	12 / 30	12 / 30
12'	Total	952	1,594	2,532	2,929	4,263	5,472	1,405	2,353	3,738	4,324	6,293	8,078	8,066
	Live	723	1,365	-	-	-	-	1,068	2,015	-	-	-	-	-
	Min. End/Int. Brg [in]	2.1 / 5.2	3.5 / 8.8	5.6 / 13.9	6.4 / 16.1	9.4 / 23.4	12 / 30	2.1 / 5.2	3.5 / 8.8	5.6 / 13.9	6.4 / 16.1	9.4 / 23.4	12 / 30	12 / 30
14'	Total	605	1,159	2,001	2,420	3,468	4,685	893	1,712	2,955	3,572	5,119	6,915	6,903
	Live	463	882	-	-	-	-	684	1,301	-	-	-	-	-
	Min. End/Int. Brg [in]	1.6 / 3.9	3 / 7.5	5.1 / 12.8	6.2 / 15.5	8.9 / 22.2	12 / 30	1.6 / 3.9	3 / 7.5	5.1 / 12.8	6.2 / 15.5	8.9 / 22.2	12 / 30	12 / 30
16'	Total	406	785	1,527	1,890	2,921	3,897	599	1,159	2,255	2,791	4,312	5,753	6,031
	Live	314	601	1,406	-	-	-	463	887	2,075	-	-	-	-
	Min. End/Int. Brg [in]	1.5 / 3	2.3 / 5.8	4.5 / 11.2	5.6 / 13.9	8.6 / 21.4	11.4 / 28.6	1.5 / 3	2.3 / 5.8	4.5 / 11.2	5.6 / 13.9	8.6 / 21.4	11.4 / 28.6	12 / 30
18'	Total	283	553	1,202	1,489	2,507	3,335	418	816	1,775	2,197	3,700	4,922	5,353
	Live	222	427	1,008	1,406	-	-	328	630	1,487	2,075	-	-	-
	Min. End/Int. Brg [in]	1.5 / 3	1.9 / 4.6	4 / 10	4.9 / 12.3	8.3 / 20.7	11 / 27.6	1.5 / 3	1.9 / 4.6	4 / 10	4.9 / 12.3	8.3 / 20.7	11 / 27.6	12 / 30
20'	Total	204	402	970	1,201	2,024	2,913	302	594	1,431	1,773	2,988	4,300	4,811
	Live	163	314	746	1,044	-	-	240	463	1,101	1,541	-	-	-
	Min. End/Int. Brg [in]	1.5 / 3	1.5 / 3.8	3.6 / 9	4.4 / 11.1	7.5 / 18.7	10.7 / 26.8	1.5 / 3	1.5 / 3.8	3.6 / 9	4.4 / 11.1	7.5 / 18.7	10.7 / 26.8	12 / 30
22'	Total	151	300	734	988	1,667	2,499	223	443	1,083	1,459	2,461	3,690	4,367
	Live	123	237	566	795	-	-	181	350	836	1,174	-	-	-
	Min. End/Int. Brg [in]	1.5 / 3	1.5 / 3.2	3 / 7.5	4 / 10.1	6.8 / 17	10.1 / 25.3	1.5 / 3	1.5 / 3.2	3 / 7.5	4 / 10.1	6.8 / 17	10.1 / 25.3	12 / 30
24'	Total	114	229	565	801	1,396	2,094	168	338	834	1,183	2,061	3,091	3,997
	Live	95	184	440	619	-	-	140	271	650	914	-	-	-
	Min. End/Int. Brg [in]	1.5 / 3	1.5 / 3	2.6 / 6.4	3.6 / 9	6.2 / 15.5	9.3 / 23.2	1.5 / 3	1.5 / 3	2.6 / 6.4	3.6 / 9	6.2 / 15.5	9.3 / 23.2	12 / 30
26'	Total	87	177	443	630	1,185	1,778	128	262	654	931	1,749	2,625	3,656
	Live	75	145	348	491	1,122	-	110	214	514	725	1,656	-	-
	Min. End/Int. Brg [in]	1.5 / 3	1.5 / 3	2.2 / 5.5	3.1 / 7.7	5.7 / 14.3	8.6 / 21.4	1.5 / 3	1.5 / 3	2.2 / 5.5	3.1 / 7.7	5.7 / 14.3	8.6 / 21.4	11.9 / 29.8
28'	Total	67	139	352	503	1,017	1,528	99	206	520	743	1,501	2,255	3,142
	Live	60	116	280	396	908	-	89	172	414	584	1,341	-	-
	Min. End/Int. Brg [in]	1.5 / 3	1.5 / 3	1.9 / 4.7	2.7 / 6.7	5.3 / 13.3	8 / 19.9	1.5 / 3	1.5 / 3	1.9 / 4.7	2.7 / 6.7	5.3 / 13.3	8 / 19.9	11.1 / 27.6
30'	Total	52	111	284	407	882	1,325	77	163	419	601	1,302	1,957	2,728
	Live	49	95	229	324	746	-	72	140	338	478	1,101	-	-
	Min. End/Int. Brg [in]	1.5 / 3	1.5 / 3	1.7 / 4.2	2.3 / 5.9	5 / 12.4	7.4 / 18.6	1.5 / 3	1.5 / 3	1.7 / 4.2	2.3 / 5.9	5 / 12.4	7.4 / 18.6	10.3 / 25.8

◆ Optimized Fiber Usage, Minimum Waste Size. DfMA - Design for Manufacturing and Assembly

NOTES

- Span loads are limited by shear, moment, or deflection limits of L/240 for live load and L/180 for total load. The beam's self-weight is included.
- Bearing lengths
  - Bearing is required across the full width of the beam.
  - Bearing lengths shown are the minimum required at end and interior supports in inches.
  - Bearing lengths are based on the compressive strength, perpendicular-to-grain, of the beam material. Longer end bearings are typically required for adequate fastener end and edge distances and/or fire protection.
- Table assumes:
  - Lateral support at each support and continuously along compression edges of the beam.
  - Load duration factor of 1.25.
  - Spans measured center-line to center-line of supports.
  - Worst case of single or multiple spans.
  - Maximum total length of 60' per manufacturing capabilities.
- For fire-resistent designs, use char rate calculation per the NDS. Contact Boise Cascade engineering for more information.
- Loads shown are intended for preliminary design purposes only. Analysis using appropriate software may result in higher allowable loads than shown.

Boise Cascade® ENGINEERED WOOD PRODUCTS

Roof - Non-Snow Spans — 1.25 Duration [PLF]

Span	Load Types and Min. Bearing	10⅜" (10.375") Width						
		Beam Depth						
		◆ 9½" (9.50")	◆ 11⅞" (11.875")	◆ 16" (16.00")	18" (18.00")	◆ 24" (24.00")	30" (30.00")	36" (36.00")
10'	Total	3,041	4,360	6,288	7,324	10,921	12,993	12,977
	Live	2,404	-	-	-	-	-	-
	Min. End/Int. Brg [in]	2.8 / 7	4 / 10.1	5.8 / 14.5	6.8 / 16.9	10.1 / 25.2	12 / 30	12 / 30
12'	Total	1,881	3,150	5,005	5,788	8,425	10,814	10,798
	Live	1,430	2,697	-	-	-	-	-
	Min. End/Int. Brg [in]	2.1 / 5.2	3.5 / 8.8	5.6 / 13.9	6.4 / 16.1	9.4 / 23.4	12 / 30	12 / 30
14'	Total	1,195	2,291	3,955	4,782	6,853	9,258	9,242
	Live	916	1,742	-	-	-	-	-
	Min. End/Int. Brg [in]	1.6 / 3.9	3 / 7.5	5.1 / 12.8	6.2 / 15.5	8.9 / 22.2	12 / 30	12 / 30
16'	Total	802	1,551	3,018	3,736	5,772	7,701	8,074
	Live	620	1,187	2,778	-	-	-	-
	Min. End/Int. Brg [in]	1.5 / 3	2.3 / 5.8	4.5 / 11.2	5.6 / 13.9	8.6 / 21.4	11.4 / 28.6	12 / 30
18'	Total	560	1,093	2,376	2,942	4,954	6,590	7,167
	Live	439	844	1,991	2,778	-	-	-
	Min. End/Int. Brg [in]	1.5 / 3	1.9 / 4.6	4 / 10	4.9 / 12.3	8.3 / 20.7	11 / 27.6	12 / 30
20'	Total	404	795	1,916	2,374	4,000	5,756	6,440
	Live	322	620	1,473	2,063	-	-	-
	Min. End/Int. Brg [in]	1.5 / 3	1.5 / 3.8	3.6 / 9	4.4 / 11.1	7.5 / 18.7	10.7 / 26.8	12 / 30
22'	Total	298	594	1,450	1,953	3,295	4,939	5,846
	Live	243	469	1,119	1,571	-	-	-
	Min. End/Int. Brg [in]	1.5 / 3	1.5 / 3.2	3 / 7.5	4 / 10.1	6.8 / 17	10.1 / 25.3	12 / 30
24'	Total	225	452	1,117	1,583	2,759	4,138	5,351
	Live	188	363	870	1,223	-	-	-
	Min. End/Int. Brg [in]	1.5 / 3	1.5 / 3	2.6 / 6.4	3.6 / 9	6.2 / 15.5	9.3 / 23.2	12 / 30
26'	Total	172	350	875	1,246	2,341	3,514	4,894
	Live	148	287	689	970	2,216	-	-
	Min. End/Int. Brg [in]	1.5 / 3	1.5 / 3	2.2 / 5.5	3.1 / 7.7	5.7 / 14.3	8.6 / 21.4	11.9 / 29.8
28'	Total	133	275	696	995	2,010	3,019	4,206
	Live	119	230	554	782	1,795	-	-
	Min. End/Int. Brg [in]	1.5 / 3	1.5 / 3	1.9 / 4.7	2.7 / 6.7	5.3 / 13.3	8 / 19.9	11.1 / 27.6
30'	Total	103	218	561	805	1,742	2,619	3,652
	Live	97	188	453	639	1,473	-	-
	Min. End/Int. Brg [in]	1.5 / 3	1.5 / 3	1.7 / 4.2	2.3 / 5.9	5 / 12.4	7.4 / 18.6	10.3 / 25.8

◆ Optimized Fiber Usage, Minimum Waste Size. DfMA - Design for Manufacturing and Assembly

NOTES

- Span loads are limited by shear, moment, or deflection limits of L/240 for live load and L/180 for total load. The beam's self-weight is included.
- Bearing lengths
  - Bearing is required across the full width of the beam.
  - Bearing lengths shown are the minimum required at end and interior supports in inches.
  - Bearing lengths are based on the compressive strength, perpendicular-to-grain, of the beam material. Longer end bearings are typically required for adequate fastener end and edge distances and/or fire protection.
- Table assumes:
  - Lateral support at each support and continuously along compression edges of the beam.
  - Load duration factor of 1.25.
  - Spans measured center-line to center-line of supports.
  - Worst case of single or multiple spans.
  - Maximum total length of 60' per manufacturing capabilities.
- For fire-resistent designs, use char rate calculation per the NDS. Contact Boise Cascade engineering for more information.
- Loads shown are intended for preliminary design purposes only. Analysis using appropriate software may result in higher allowable loads than shown.

Roof - Non-Snow Spans — 1.25 Duration [PLF]

Span	Load Types and Min. Bearing	12⅛" (12.125") Width							15½" (15.50") Width						
		Beam Depth							Beam Depth						
		◆ 11⅞" (11.875")	◆ 16" (16.00")	18" (18.00")	◆ 24" (24.00")	30" (30.00")	36" (36.00")	◆ 48" (48.00")	◆ 11⅞" (11.875")	◆ 16" (16.00")	18" (18.00")	◆ 24" (24.00")	30" (30.00")	36" (36.00")	◆ 48" (48.00")
10'	Total	5,095	7,348	8,559	12,763	15,184	15,165	15,128	6,513	9,394	10,941	16,316	19,411	19,387	19,339
	Live	-	-	-	-	-	-	-	-	-	-	-	-	-	-
	Min. End/Int. Brg [in]	4 / 10.1	5.8 / 14.5	6.8 / 16.9	10.1 / 25.2	12 / 30	12 / 30	12 / 30	4 / 10.1	5.8 / 14.5	6.8 / 16.9	10.1 / 25.2	12 / 30	12 / 30	12 / 30
12'	Total	3,681	5,849	6,764	9,846	12,638	12,619	12,582	4,706	7,477	8,647	12,586	16,156	16,132	16,084
	Live	3,152	-	-	-	-	-	-	4,030	-	-	-	-	-	-
	Min. End/Int. Brg [in]	3.5 / 8.8	5.6 / 13.9	6.4 / 16.1	9.4 / 23.4	12 / 30	12 / 30	12 / 30	3.5 / 8.8	5.6 / 13.9	6.4 / 16.1	9.4 / 23.4	12 / 30	12 / 30	12 / 30
14'	Total	2,678	4,622	5,588	8,009	10,819	10,800	10,763	3,423	5,909	7,144	10,238	13,831	13,807	13,759
	Live	2,036	-	-	-	-	-	-	2,603	-	-	-	-	-	-
	Min. End/Int. Brg [in]	3 / 7.5	5.1 / 12.8	6.2 / 15.5	8.9 / 22.2	12 / 30	12 / 30	12 / 30	3 / 7.5	5.1 / 12.8	6.2 / 15.5	8.9 / 22.2	12 / 30	12 / 30	12 / 30
16'	Total	1,813	3,527	4,366	6,746	9,000	9,436	9,399	2,317	4,509	5,581	8,623	11,506	12,063	12,015
	Live	1,387	3,246	-	-	-	-	-	1,773	4,150	-	-	-	-	-
	Min. End/Int. Brg [in]	2.3 / 5.8	4.5 / 11.2	5.6 / 13.9	8.6 / 21.4	11.4 / 28.6	12 / 30	12 / 30	2.3 / 5.8	4.5 / 11.2	5.6 / 13.9	8.6 / 21.4	11.4 / 28.6	12 / 30	12 / 30
18'	Total	1,277	2,777	3,438	5,789	7,701	8,375	8,338	1,633	3,549	4,395	7,401	9,845	10,707	10,659
	Live	986	2,327	3,246	-	-	-	-	1,260	2,975	4,150	-	-	-	-
	Min. End/Int. Brg [in]	1.9 / 4.6	4 / 10	4.9 / 12.3	8.3 / 20.7	11 / 27.6	12 / 30	12 / 30	1.9 / 4.6	4 / 10	4.9 / 12.3	8.3 / 20.7	11 / 27.6	12 / 30	12 / 30
20'	Total	929	2,240	2,774	4,675	6,727	7,527	7,489	1,188	2,863	3,546	5,977	8,599	9,622	9,574
	Live	725	1,722	2,411	-	-	-	-	926	2,201	3,082	-	-	-	-
	Min. End/Int. Brg [in]	1.5 / 3.8	3.6 / 9	4.4 / 11.1	7.5 / 18.7	10.7 / 26.8	12 / 30	12 / 30	1.5 / 3.8	3.6 / 9	4.4 / 11.1	7.5 / 18.7	10.7 / 26.8	12 / 30	12 / 30
22'	Total	694	1,694	2,283	3,851	5,773	6,832	6,795	887	2,166	2,918	4,923	7,379	8,734	8,686
	Live	548	1,308	1,837	-	-	-	-	700	1,672	2,348	-	-	-	-
	Min. End/Int. Brg [in]	1.5 / 3.2	3 / 7.5	4 / 10.1	6.8 / 17	10.1 / 25.3	12 / 30	12 / 30	1.5 / 3.2	3 / 7.5	4 / 10.1	6.8 / 17	10.1 / 25.3	12 / 30	12 / 30
24'	Total	528	1,305	1,850	3,224	4,836	6,253	6,216	676	1,669	2,365	4,121	6,182	7,994	7,946
	Live	424	1,016	1,430	-	-	-	-	542	1,299	1,828	-	-	-	-
	Min. End/Int. Brg [in]	1.5 / 3	2.6 / 6.4	3.6 / 9	6.2 / 15.5	9.3 / 23.2	12 / 30	12 / 30	1.5 / 3	2.6 / 6.4	3.6 / 9	6.2 / 15.5	9.3 / 23.2	12 / 30	12 / 30
26'	Total	409	1,023	1,456	2,736	4,106	5,719	5,726	523	1,308	1,861	3,497	5,249	7,311	7,320
	Live	335	805	1,134	2,590	-	-	-	428	1,029	1,450	3,311	-	-	-
	Min. End/Int. Brg [in]	1.5 / 3	2.2 / 5.5	3.1 / 7.7	5.7 / 14.3	8.6 / 21.4	11.9 / 29.8	12 / 30	1.5 / 3	2.2 / 5.5	3.1 / 7.7	5.7 / 14.3	8.6 / 21.4	11.9 / 29.8	12 / 30
28'	Total	322	814	1,163	2,349	3,528	4,916	5,307	411	1,040	1,486	3,002	4,510	6,284	6,784
	Live	269	648	914	2,098	-	-	-	344	828	1,169	2,682	-	-	-
	Min. End/Int. Brg [in]	1.5 / 3	1.9 / 4.7	2.7 / 6.7	5.3 / 13.3	8 / 19.9	11.1 / 27.6	12 / 30	1.5 / 3	1.9 / 4.7	2.7 / 6.7	5.3 / 13.3	8 / 19.9	11.1 / 27.6	12 / 30
30'	Total	255	655	940	2,036	3,061	4,268	4,943	326	838	1,202	2,603	3,913	5,456	6,319
	Live	219	529	747	1,722	-	-	-	280	676	955	2,201	-	-	-
	Min. End/Int. Brg [in]	1.5 / 3	1.7 / 4.2	2.3 / 5.9	5 / 12.4	7.4 / 18.6	10.3 / 25.8	12 / 30	1.5 / 3	1.7 / 4.2	2.3 / 5.9	5 / 12.4	7.4 / 18.6	10.3 / 25.8	12 / 30

◆ Optimized Fiber Usage, Minimum Waste Size. DfMA - Design for Manufacturing and Assembly

NOTES

- Span loads are limited by shear, moment, or deflection limits of L/240 for live load and L/180 for total load. The beam's self-weight is included.
- Bearing lengths
  - Bearing is required across the full width of the beam.
  - Bearing lengths shown are the minimum required at end and interior supports in inches.
  - Bearing lengths are based on the compressive strength, perpendicular-to-grain, of the beam material. Longer end bearings are typically required for adequate fastener end and edge distances and/or fire protection.
- Table assumes:
  - Lateral support at each support and continuously along compression edges of the beam.
  - Load duration factor of 1.25.
  - Spans measured center-line to center-line of supports.
  - Worst case of single or multiple spans.
  - Maximum total length of 60' per manufacturing capabilities.
- For fire-resistent designs, use char rate calculation per the NDS. Contact Boise Cascade engineering for more information.
- Loads shown are intended for preliminary design purposes only. Analysis using appropriate software may result in higher allowable loads than shown.

Boise Cascade® ENGINEERED WOOD PRODUCTS

Roof - Non-Snow Spans — 1.25 Duration [PLF]

Span	Load Types and Min. Bearing	19⅞" (19.875") Width						23⅜" (23.375") Width					
		Beam Depth						Beam Depth					
		18" (18.00")	◆ 24" (24.00")	30" (30.00")	36" (36.00")	40" (40.00")	◆ 48" (48.00")	18" (18.00")	◆ 24" (24.00")	30" (30.00")	36" (36.00")	40" (40.00")	◆ 48" (48.00")
10'	Total	14,030	20,922	24,889	24,859	24,838	24,797	16,500	24,606	29,272	29,236	29,212	29,164
	Live	-	-	-	-	-	-	-	-	-	-	-	-
	Min. End/Int. Brg [in]	6.8 / 16.9	10.1 / 25.2	12 / 30	12 / 30	12 / 30	12 / 30	6.8 / 16.9	10.1 / 25.2	12 / 30	12 / 30	12 / 30	12 / 30
12'	Total	11,088	16,139	20,716	20,685	20,664	20,624	13,040	18,981	24,364	24,328	24,304	24,255
	Live	-	-	-	-	-	-	-	-	-	-	-	-
	Min. End/Int. Brg [in]	6.4 / 16.1	9.4 / 23.4	12 / 30	12 / 30	12 / 30	12 / 30	6.4 / 16.1	9.4 / 23.4	12 / 30	12 / 30	12 / 30	12 / 30
14'	Total	9,160	13,127	17,734	17,704	17,683	17,642	10,773	15,439	20,857	20,821	20,797	20,749
	Live	-	-	-	-	-	-	-	-	-	-	-	-
	Min. End/Int. Brg [in]	6.2 / 15.5	8.9 / 22.2	12 / 30	12 / 30	12 / 30	12 / 30	6.2 / 15.5	8.9 / 22.2	12 / 30	12 / 30	12 / 30	12 / 30
16'	Total	7,157	11,057	14,753	15,468	15,447	15,406	8,417	13,004	17,351	18,192	18,168	18,120
	Live	-	-	-	-	-	-	-	-	-	-	-	-
	Min. End/Int. Brg [in]	5.6 / 13.9	8.6 / 21.4	11.4 / 28.6	12 / 30	12 / 30	12 / 30	5.6 / 13.9	8.6 / 21.4	11.4 / 28.6	12 / 30	12 / 30	12 / 30
18'	Total	5,635	9,490	12,624	13,729	13,708	13,667	6,628	11,161	14,847	16,146	16,122	16,074
	Live	5,321	-	-	-	-	-	6,258	-	-	-	-	-
	Min. End/Int. Brg [in]	4.9 / 12.3	8.3 / 20.7	11 / 27.6	12 / 30	12 / 30	12 / 30	4.9 / 12.3	8.3 / 20.7	11 / 27.6	12 / 30	12 / 30	12 / 30
20'	Total	4,547	7,663	11,026	12,337	12,317	12,276	5,348	9,013	12,968	14,510	14,486	14,438
	Live	3,952	-	-	-	-	-	4,647	-	-	-	-	-
	Min. End/Int. Brg [in]	4.4 / 11.1	7.5 / 18.7	10.7 / 26.8	12 / 30	12 / 30	12 / 30	4.4 / 11.1	7.5 / 18.7	10.7 / 26.8	12 / 30	12 / 30	12 / 30
22'	Total	3,742	6,312	9,462	11,199	11,179	11,138	4,401	7,424	11,128	13,171	13,147	13,099
	Live	3,010	-	-	-	-	-	3,541	-	-	-	-	-
	Min. End/Int. Brg [in]	4 / 10.1	6.8 / 17	10.1 / 25.3	12 / 30	12 / 30	12 / 30	4 / 10.1	6.8 / 17	10.1 / 25.3	12 / 30	12 / 30	12 / 30
24'	Total	3,033	5,284	7,926	10,251	10,230	10,189	3,567	6,215	9,322	12,056	12,032	11,984
	Live	2,344	-	-	-	-	-	2,756	-	-	-	-	-
	Min. End/Int. Brg [in]	3.6 / 9	6.2 / 15.5	9.3 / 23.2	12 / 30	12 / 30	12 / 30	3.6 / 9	6.2 / 15.5	9.3 / 23.2	12 / 30	12 / 30	12 / 30
26'	Total	2,387	4,485	6,731	9,375	9,427	9,387	2,807	5,274	7,917	11,026	11,088	11,040
	Live	1,859	4,246	-	-	-	-	2,186	4,994	-	-	-	-
	Min. End/Int. Brg [in]	3.1 / 7.7	5.7 / 14.3	8.6 / 21.4	11.9 / 29.8	12 / 30	12 / 30	3.1 / 7.7	5.7 / 14.3	8.6 / 21.4	11.9 / 29.8	12 / 30	12 / 30
28'	Total	1,906	3,850	5,783	8,058	8,739	8,699	2,242	4,528	6,801	9,477	10,279	10,230
	Live	1,498	3,439	-	-	-	-	1,762	4,045	-	-	-	-
	Min. End/Int. Brg [in]	2.7 / 6.7	5.3 / 13.3	8 / 19.9	11.1 / 27.6	12 / 30	12 / 30	2.7 / 6.7	5.3 / 13.3	8 / 19.9	11.1 / 27.6	12 / 30	12 / 30
30'	Total	1,541	3,338	5,018	6,996	8,143	8,102	1,813	3,926	5,901	8,228	9,577	9,529
	Live	1,225	2,822	-	-	-	-	1,441	3,319	-	-	-	-
	Min. End/Int. Brg [in]	2.3 / 5.9	5 / 12.4	7.4 / 18.6	10.3 / 25.8	12 / 30	12 / 30	2.3 / 5.9	5 / 12.4	7.4 / 18.6	10.3 / 25.8	12 / 30	12 / 30

◆ Optimized Fiber Usage, Minimum Waste Size. DfMA - Design for Manufacturing and Assembly

NOTES

- Span loads are limited by shear, moment, or deflection limits of L/240 for live load and L/180 for total load. The beam's self-weight is included.
- Bearing lengths
  - Bearing is required across the full width of the beam.
  - Bearing lengths shown are the minimum required at end and interior supports in inches.
  - Bearing lengths are based on the compressive strength, perpendicular-to-grain, of the beam material. Longer end bearings are typically required for adequate fastener end and edge distances and/or fire protection.
- Table assumes:
  - Lateral support at each support and continuously along compression edges of the beam.
  - Load duration factor of 1.25.
  - Spans measured center-line to center-line of supports.
  - Worst case of single or multiple spans.
  - Maximum total length of 60' per manufacturing capabilities.
- For fire-resistent designs, use char rate calculation per the NDS. Contact Boise Cascade engineering for more information.
- Loads shown are intended for preliminary design purposes only. Analysis using appropriate software may result in higher allowable loads than shown.

Allowable Axial Load [LBS]

Column Size	Load Duration	Column Length					
		10' (10.00')	12' (12.00')	14' (14.00')	16' (16.00')	18' (18.00')	20' (20.00')
◆ 3½" x 3½" (3.50" x 3.50")	1.0 Floor	4,360	3,270	2,530			
	1.15 Roof Snow	4,500	3,350	2,590			
	1.25 Roof Non-Snow	4,570	3,400	2,620			
◆ 5¼" x 5¼" (5.25" x 5.25")	1.0 Floor	17,360	13,620	10,890	8,880	7,360	6,190
	1.15 Roof Snow	18,240	14,180	11,260	9,140	7,550	6,340
	1.25 Roof Non-Snow	18,760	14,500	11,480	9,290	7,660	6,420
◆ 7¾" x 7⅞" (7.75" x 7.875")	1.0 Floor	56,810	48,150	40,530	34,260	29,200	25,100
	1.15 Roof Snow	61,640	51,370	42,760	35,880	30,390	26,020
	1.25 Roof Non-Snow	64,510	53,260	44,060	36,800	31,090	26,540
◆ 10⅜" x 9½" (10.375" x 9.50")	1.0 Floor	110,650	99,510	87,670	76,460	66,610	58,210
	1.15 Roof Snow	122,280	108,480	94,110	81,140	70,140	60,900
	1.25 Roof Non-Snow	130,220	113,850	97,880	83,870	72,160	62,480
◆ 12⅛" x 11⅞" (12.125" x 11.875")	1.0 Floor	164,190	153,060	140,760	127,840	115,070	103,100
	1.15 Roof Snow	184,420	169,980	154,330	138,380	123,160	109,480
	1.25 Roof Non-Snow	197,180	180,520	162,570	144,620	127,950	113,220
◆ 15½" x 16" (15.50" x 16.00")	1.0 Floor	284,170	272,610	259,700	245,320	230,150	214,440
	1.15 Roof Snow	322,350	307,110	290,350	272,070	252,860	233,360
	1.25 Roof Non-Snow	346,840	329,280	309,730	288,710	266,720	244,730
◆ 19⅞" x 16" (19.875" x 16.00")	1.0 Floor	420,070	408,510	394,540	378,410	360,130	339,870
	1.15 Roof Snow	478,590	462,930	444,700	423,220	399,100	372,670
	1.25 Roof Non-Snow	516,790	498,440	476,510	451,390	423,010	392,320
◆ 23⅜" x 24" (23.375" x 24.00")	1.0 Floor	647,460	635,760	622,060	607,040	590,360	572,390
	1.15 Roof Snow	740,150	724,310	707,140	687,020	665,770	642,310
	1.25 Roof Non-Snow	800,560	782,640	761,930	739,060	713,810	687,160

◆ Optimized Fiber Usage, Minimum Waste Size. DfMA - Design for Manufacturing and Assembly

NOTES

- Table assumes that column is braced at column ends only. Effective column length is equal to actual column length.
- Allowable loads are based on one-piece column members used in dry service conditions.
- Allowable loads are based on an eccentricity value equal to 0.167 multiplied by the column thickness or width (worst case).
- Allowable loads are based on axial loading columns using the design provisions of the National Design Specification for Wood Construction (NDS). For side or other combined bending and axial loads, use appropriate software to analyze such conditions.
- It may be possible to exceed the limitations of the table by analyzing a specific application with the use of an appropriate software program.
- Other sizes available, speak with your representative for assistance.

Glulam 1.9E Beam Reference Design Values and Section Properties

Beam Width	Beam Depth [in]	Weight [lb/ft]	Allowable Shear [lb]	Allowable Moment (Bottom Edge Tension) [lb*ft]	Allowable Moment (Bottom Edge Compression) [lb*ft]	Section Area [in²]	Section Modulus [in³]	Moment of Inertia [in⁴]
3⅛" (3.125")	6 (6.00)	4.6	3,313	4,233	3,263	18.8	18.8	56.3
	9 (9.00)	6.8	4,969	9,146	7,050	28.1	42.2	189.8
	12 (12.00)	9.1	6,625	15,799	12,178	37.5	75.0	450.0
	15 (15.00)	11.4	8,281	24,141	18,609	46.9	117.2	878.9
	18 (18.00)	13.7	9,938	34,135	26,312	56.3	168.8	1,518.8
	21 (21.00)	16.0	11,594	45,750	35,266	65.6	229.7	2,411.7
	24 (24.00)	18.2	13,250	58,963	45,451	75.0	300.0	3,600.0
5⅛" (5.125")	6 (6.00)	7.5	5,433	6,607	5,093	30.8	30.8	92.3
	9 (9.00)	11.2	8,149	14,276	11,004	46.1	69.2	311.3
	12 (12.00)	14.9	10,865	24,659	19,008	61.5	123.0	738.0
	15 (15.00)	18.7	13,581	37,680	29,045	76.9	192.2	1,441.4
	18 (18.00)	22.4	16,298	53,279	41,069	92.3	276.8	2,490.8
	21 (21.00)	26.2	19,014	71,409	55,045	107.6	376.7	3,955.2
	24 (24.00)	29.9	21,730	92,032	70,941	123.0	492.0	5,904.0
6¾" (6.75")	9 (9.00)	14.8	10,733	18,291	14,100	60.8	91.1	410.1
	12 (12.00)	19.7	14,310	31,596	24,355	81.0	162.0	972.0
	15 (15.00)	24.6	17,888	48,279	37,215	101.3	253.1	1,898.4
	18 (18.00)	29.5	21,465	68,266	52,622	121.5	364.5	3,280.5
	21 (21.00)	34.5	25,043	91,496	70,528	141.8	496.1	5,209.3
	24 (24.00)	39.4	28,620	117,920	90,897	162.0	648.0	7,776.0
	27 (27.00)	44.3	32,198	147,495	113,694	182.3	820.1	11,071.7
	30 (30.00)	49.2	35,775	180,184	138,892	202.5	1,012.5	15,187.5
8¾" (8.75")	9 (9.00)	19.1	13,913	23,104	17,809	78.8	118.1	531.7
	12 (12.00)	25.5	18,550	39,908	30,763	105.0	210.0	1,260.0
	15 (15.00)	31.9	23,188	60,981	47,006	131.3	328.1	2,460.9
	18 (18.00)	38.3	27,825	86,226	66,466	157.5	472.5	4,252.5
	21 (21.00)	44.7	32,463	115,568	89,083	183.8	643.1	6,752.8
	24 (24.00)	51.0	37,100	148,943	114,811	210.0	840.0	10,080.0
	27 (27.00)	57.4	41,738	186,299	143,606	236.3	1,063.1	14,352.2
	30 (30.00)	63.8	46,375	227,589	175,433	262.5	1,312.5	19,687.5
	33 (33.00)	70.2	51,013	272,770	210,260	288.8	1,588.1	26,204.7
	36 (36.00)	76.6	55,650	321,806	248,059	315.0	1,890.0	34,020.0
10¾" (10.75")	12 (12.00)	31.4	22,790	48,031	37,024	129.0	258.0	1,548.0
	15 (15.00)	39.2	28,488	73,393	56,574	161.3	403.1	3,023.4
	18 (18.00)	47.0	34,185	103,776	79,994	193.5	580.5	5,224.5
	21 (21.00)	54.9	39,883	139,090	107,215	225.8	790.1	8,296.3
	24 (24.00)	62.7	45,580	179,259	138,179	258.0	1,032.0	12,384.0
	27 (27.00)	70.5	51,278	224,219	172,835	290.3	1,306.1	17,632.7
	30 (30.00)	78.4	56,975	273,912	211,140	322.5	1,612.5	24,187.5
	33 (33.00)	86.2	62,673	328,289	253,056	354.8	1,951.1	32,193.6
	36 (36.00)	94.1	68,370	387,307	298,549	387.0	2,322.0	41,796.0
	39 (39.00)	101.9	74,068	450,924	347,587	419.3	2,725.1	53,139.9
	42 (42.00)	109.7	79,765	519,104	400,142	451.5	3,160.5	66,370.5
12¼" (12.25")	12 (12.00)	35.7	25,970	54,023	41,643	147.0	294.0	1,764.0
	15 (15.00)	44.7	32,463	82,548	63,631	183.8	459.4	3,445.3
	18 (18.00)	53.6	38,955	116,722	89,973	220.5	661.5	5,953.5
	21 (21.00)	62.5	45,448	156,441	120,590	257.3	900.4	9,453.9
	24 (24.00)	71.5	51,940	201,621	155,417	294.0	1,176.0	14,112.0
	27 (27.00)	80.4	58,433	252,189	194,396	330.8	1,488.4	20,093.1
	30 (30.00)	89.3	64,925	308,082	237,480	367.5	1,837.5	27,562.5
	33 (33.00)	98.3	71,418	369,243	284,624	404.3	2,223.4	36,685.7
	36 (36.00)	107.2	77,910	435,622	335,792	441.0	2,646.0	47,628.0
	39 (39.00)	116.1	84,403	507,175	390,948	477.8	3,105.4	60,554.8
	42 (42.00)	125.1	90,895	583,860	450,059	514.5	3,601.5	75,631.5
14¼" (14.25")	15 (15.00)	52.0	37,763	94,584	72,909	213.8	534.4	4,007.8
	18 (18.00)	62.3	45,315	133,741	103,092	256.5	769.5	6,925.5
	21 (21.00)	72.7	52,868	179,252	138,173	299.3	1,047.4	10,997.4
	24 (24.00)	83.1	60,420	231,019	178,077	342.0	1,368.0	16,416.0
	27 (27.00)	93.5	67,973	288,960	222,740	384.8	1,731.4	23,373.6
	30 (30.00)	103.9	75,525	353,002	272,105	427.5	2,137.5	32,062.5
	33 (33.00)	114.3	83,078	423,080	326,124	470.3	2,586.4	42,675.2
	36 (36.00)	124.7	90,630	499,138	384,752	513.0	3,078.0	55,404.0
	39 (39.00)	135.1	98,183	581,124	447,950	555.8	3,612.4	70,441.3
	42 (42.00)	145.5	105,735	668,990	515,680	598.5	4,189.5	87,979.5

NOTES

Bending

– Tension bottom edge:

$$F_b = 2400 * \left[\frac{12}{d}\right]^{1/10} * \left[\frac{5.125}{b}\right]^{1/10} \text{lb/in}^2;$$

where:

d=beam depth
b=beam width

– Compression bottom edge:

$$F_b = 1850 * \left[\frac{12}{d}\right]^{1/10} * \left[\frac{5.125}{b}\right]^{1/10} \text{lb/in}^2$$

where:

d=beam depth
b=beam width

– Allowable moment calculated using glulam volume factor (C_v) with a span length of 21 feet. Allowable moment shall be multiplied by (21/Span Length [ft])$^{1/10}$ for longer spans.

Modulus of Elasticity-True
$E_t = 1.9 \times 10^6$ lb/in²

Modulus of Elasticity-Apparent
$E_a = 1.8 \times 10^6$ lb/in²

Horizontal Shear
$F_v = 265$ lb/in²

Compression Perpendicular to Grain
$F_{c\perp} = 650$ lb/in²

Compression Parallel to Grain
$F_{c\parallel} = 1{,}650$ lb/in²

Tension Parallel to Grain
$F_{t\parallel} = 1{,}100$ lb/in²

Boise Cascade® ENGINEERED WOOD PRODUCTS

Floor Spans — 1.0 Load Duration [PLF]

Span	Span Type and Min. Bearing	3⅛" (3.125") Width							5⅛" (5.125") Width						
		Beam Depth							Beam Depth						
		6" (6.00")	9" (9.00")	12" (12.00")	15" (15.00")	18" (18.00")	21" (21.00")	24" (24.00")	6" (6.00")	9" (9.00")	12" (12.00")	15" (15.00")	18" (18.00")	21" (21.00")	24" (24.00")
10'	Simple	220	668	1,191	1,864	2,686	3,551	4,398	362	1,096	1,953	3,056	4,406	5,824	7,213
	Multiple	227	513	916	1,434	2,068	2,560	3,099	372	842	1,502	2,352	3,391	4,199	5,083
	Min. End/Int. Brg [in]	1.5 / 3	1.7 / 3.2	3 / 5.7	4.6 / 8.9	6.6 / 12.8	8.8 / 15.9	10.9 / 19.2	1.5 / 3	1.7 / 3.2	3 / 5.7	4.6 / 8.9	6.6 / 12.8	8.8 / 15.9	10.9 / 19.2
12'	Simple	126	433	824	1,291	1,861	2,536	3,294	206	709	1,352	2,117	3,053	4,159	5,364
	Multiple	156	354	633	992	1,432	1,951	2,391	256	581	1,039	1,627	2,348	3,200	3,921
	Min. End/Int. Brg [in]	1.5 / 3	1.5 / 3	2.5 / 4.7	3.8 / 7.4	5.5 / 10.7	7.5 / 14.5	9.8 / 17.8	1.5 / 3	1.5 / 3	2.5 / 4.7	3.8 / 7.4	5.5 / 10.7	7.5 / 14.5	9.7 / 17.8
14'	Simple	77	270	603	945	1,364	1,859	2,431	127	443	989	1,550	2,237	3,002	3,873
	Multiple	113	259	463	726	1,048	1,429	1,870	186	424	759	1,191	1,719	2,308	2,978
	Min. End/Int. Brg [in]	1.5 / 3	1.5 / 3	2.1 / 4.1	3.3 / 6.4	4.7 / 9.1	6.5 / 12.5	8.4 / 16.3	1.5 / 3	1.5 / 3	2.1 / 4.1	3.3 / 6.4	4.7 / 9.1	6.4 / 12.3	8.2 / 15.8
16'	Simple	50	179	430	721	1,041	1,420	1,857	83	293	706	1,182	1,684	2,261	2,918
	Multiple	78	196	352	553	799	1,091	1,427	127	322	578	907	1,293	1,737	2,243
	Min. End/Int. Brg [in]	1.5 / 3	1.5 / 3	1.7 / 3.6	2.9 / 5.6	4.2 / 8	5.7 / 10.9	7.4 / 14.2	1.5 / 3	1.5 / 3	1.7 / 3.6	2.9 / 5.6	4.1 / 7.9	5.5 / 10.6	7.1 / 13.6
18'	Simple		123	300	567	820	1,118	1,457	56	202	491	924	1,310	1,760	2,272
	Multiple		154	276	435	629	858	1,119	87	252	453	708	1,005	1,351	1,745
	Min. End/Int. Brg [in]		1.5 / 3	1.5 / 3.2	2.6 / 4.9	3.7 / 7.1	5 / 9.7	6.5 / 12.6	1.5 / 3	1.5 / 3	1.5 / 3.2	2.5 / 4.9	3.6 / 6.9	4.8 / 9.3	6.2 / 12
20'	Simple		88	216	428	661	901	1,164		144	354	702	1,046	1,406	1,815
	Multiple		123	222	350	507	691	893		202	364	564	801	1,077	1,392
	Min. End/Int. Brg [in]		1.5 / 3	1.5 / 3	2.2 / 4.4	3.3 / 6.4	4.5 / 8.7	5.8 / 11.2		1.5 / 3	1.5 / 3	2.2 / 4.4	3.2 / 6.2	4.3 / 8.3	5.5 / 10.7
22'	Simple		64	160	319	544	735	950		106	262	523	852	1,146	1,481
	Multiple		100	182	287	416	563	728		164	297	458	652	877	1,134
	Min. End/Int. Brg [in]		1.5 / 3	1.5 / 3	1.8 / 4	3 / 5.8	4.1 / 7.8	5.2 / 10.1		1.5 / 3	1.5 / 3	1.8 / 3.9	2.9 / 5.6	3.9 / 7.5	5 / 9.6
24'	Simple			121	243	426	610	788		79	199	398	698	950	1,228
	Multiple			151	240	346	466	603		124	245	378	539	726	940
	Min. End/Int. Brg [in]			1.5 / 3	1.5 / 3.7	2.6 / 5.3	3.7 / 7.1	4.8 / 9.2		1.5 / 3	1.5 / 3	1.5 / 3.6	2.6 / 5.1	3.5 / 6.8	4.5 / 8.7
26'	Simple			93	189	332	513	663		60	153	309	544	799	1,034
	Multiple			128	202	290	392	507		95	205	317	452	610	790
	Min. End/Int. Brg [in]			1.5 / 3	1.5 / 3.4	2.2 / 4.9	3.4 / 6.5	4.4 / 8.4		1.5 / 3	1.5 / 3	1.5 / 3.3	2.2 / 4.6	3.2 / 6.2	4.2 / 8
28'	Simple			73	149	263	424	565			120	244	431	680	880
	Multiple			109	173	247	333	431			173	269	384	518	672
	Min. End/Int. Brg [in]			1.5 / 3	1.5 / 3.2	1.9 / 4.5	3 / 6	4 / 7.7			1.5 / 3	1.5 / 3	1.9 / 4.3	3 / 5.7	3.8 / 7.4
30'	Simple			58	119	211	341	486			94	195	347	560	758
	Multiple			91	148	211	286	371			148	230	329	445	577
	Min. End/Int. Brg [in]			1.5 / 3	1.5 / 3	1.7 / 4.2	2.6 / 5.6	3.7 / 7.2			1.5 / 3	1.5 / 3	1.7 / 4	2.6 / 5.3	3.5 / 6.8

NOTES

- Span loads are limited by shear, moment, or deflection limits of L/360 for live load and L/240 for total load. The beam's self weight is included.
- Live load is considered to be 0.6 of the total load.
- Bearing lengths:
  - Bearing is required across the full width of the beam.
  - Bearing lengths shown are the minimum required at end and interior supports in inches.
  - Bearing lengths are based on the compressive strength, perpendicular-to-grain, of the beam material. Other bearing materials or design considerations may require longer bearing lengths.
- Table assumes:
  - Lateral support at each support and continuously along compression edges of the beam.
  - Load duration factor of 1.0.
  - Spans measured center-line to center-line of supports.
  - Maximum total length of 60'. Other sizes available, speak with your representative for assistance.
  - Unbalanced beams for simple and multiple spans, balanced beams can be calculated for multiple span conditions.
- For fire-resistent designs, use char rate calculation per the NDS. Contact Boise Cascade engineering for more information.
- Loads shown are intended for preliminary design purposes only. Analysis using appropriate software may result in higher allowable loads than shown.

Boise Cascade® ENGINEERED WOOD PRODUCTS

Floor Spans — 1.0 Load Duration [PLF]

Span	Span Type and Min. Bearing	6¾" (6.75") Width							
		Beam Depth							
		9" (9.00")	12" (12.00")	15" (15.00")	18" (18.00")	21" (21.00")	24" (24.00")	27" (27.00")	30" (30.00")
10'	Simple	1,443	2,572	4,025	5,802	7,671	9,501	11,664	14,261
	Multiple	1,109	1,978	3,097	4,466	5,531	6,695	8,005	9,491
	Min. End/Int. Brg [in]	1.7 / 3.2	3 / 5.7	4.6 / 8.9	6.6 / 12.8	8.8 / 15.9	10.9 / 19.2	13.3 / 22.9	16.3 / 27.2
12'	Simple	934	1,780	2,788	3,972	5,328	6,872	8,542	10,172
	Multiple	766	1,368	2,143	3,055	4,099	5,164	6,089	7,106
	Min. End/Int. Brg [in]	1.5 / 3	2.5 / 4.7	3.8 / 7.4	5.5 / 10.5	7.3 / 14.1	9.5 / 17.8	11.7 / 21	14 / 24.5
14'	Simple	583	1,303	2,023	2,865	3,845	4,961	6,210	7,591
	Multiple	559	1,000	1,553	2,202	2,956	3,815	4,777	5,675
	Min. End/Int. Brg [in]	1.5 / 3	2.1 / 4.1	3.3 / 6.3	4.6 / 8.9	6.2 / 11.9	8 / 15.4	10 / 19.2	12.2 / 22.8
16'	Simple	386	930	1,522	2,157	2,897	3,738	4,681	5,723
	Multiple	424	761	1,168	1,656	2,225	2,872	3,598	4,400
	Min. End/Int. Brg [in]	1.5 / 3	1.7 / 3.6	2.8 / 5.4	4 / 7.7	5.3 / 10.3	6.9 / 13.3	8.6 / 16.6	10.5 / 20.3
18'	Simple	266	647	1,183	1,678	2,254	2,910	3,645	4,458
	Multiple	332	590	906	1,287	1,730	2,234	2,800	3,425
	Min. End/Int. Brg [in]	1.5 / 3	1.5 / 3.1	2.5 / 4.8	3.5 / 6.8	4.7 / 9	6.1 / 11.7	7.6 / 14.6	9.2 / 17.8
20'	Simple	190	466	925	1,339	1,800	2,325	2,913	3,563
	Multiple	266	469	722	1,026	1,380	1,783	2,235	2,735
	Min. End/Int. Brg [in]	1.5 / 3	1.5 / 3	2.2 / 4.3	3.1 / 6	4.2 / 8.1	5.4 / 10.4	6.7 / 13	8.2 / 15.9
22'	Simple	139	345	689	1,091	1,467	1,896	2,376	2,908
	Multiple	216	380	586	834	1,123	1,452	1,822	2,230
	Min. End/Int. Brg [in]	1.5 / 3	1.5 / 3	1.8 / 3.8	2.8 / 5.4	3.8 / 7.3	4.9 / 9.4	6.1 / 11.7	7.4 / 14.3
24'	Simple	104	262	525	904	1,216	1,573	1,972	2,414
	Multiple	163	313	484	690	930	1,203	1,510	1,850
	Min. End/Int. Brg [in]	1.5 / 3	1.5 / 3	1.5 / 3.5	2.6 / 4.9	3.4 / 6.6	4.4 / 8.5	5.5 / 10.6	6.7 / 13
26'	Simple	79	202	407	717	1,023	1,323	1,660	2,033
	Multiple	125	262	405	579	781	1,011	1,270	1,556
	Min. End/Int. Brg [in]	1.5 / 3	1.5 / 3	1.5 / 3.2	2.2 / 4.5	3.1 / 6	4 / 7.8	5.1 / 9.7	6.2 / 11.9
28'	Simple	60	157	321	568	871	1,127	1,415	1,733
	Multiple	97	221	343	491	663	860	1,080	1,325
	Min. End/Int. Brg [in]	1.5 / 3	1.5 / 3	1.5 / 3	1.9 / 4.2	2.9 / 5.6	3.7 / 7.2	4.7 / 9	5.7 / 11
30'	Simple		124	257	456	737	970	1,218	1,493
	Multiple		189	294	421	569	738	929	1,139
	Min. End/Int. Brg [in]		1.5 / 3	1.5 / 3	1.7 / 3.8	2.6 / 5.2	3.4 / 6.6	4.3 / 8.3	5.3 / 10.2

NOTES

- Span loads are limited by shear, moment, or deflection limits of L/360 for live load and L/240 for total load. The beam's self weight is included.
- Live load is considered to be 0.6 of the total load.
- Bearing lengths:
  - Bearing is required across the full width of the beam.
  - Bearing lengths shown are the minimum required at end and interior supports in inches.
  - Bearing lengths are based on the compressive strength, perpendicular-to-grain, of the beam material. Other bearing materials or design considerations may require longer bearing lengths.
- Table assumes:
  - Lateral support at each support and continuously along compression edges of the beam.
  - Load duration factor of 1.0.
  - Spans measured center-line to center-line of supports.
  - Maximum total length of 60'. Other sizes available, speak with your representative for assistance.
  - Unbalanced beams for simple and multiple spans, balanced beams can be calculated for multiple span conditions.
- For fire-resistent designs, use char rate calculation per the NDS. Contact Boise Cascade engineering for more information.
- Loads shown are intended for preliminary design purposes only. Analysis using appropriate software may result in higher allowable loads than shown.

Floor Spans — 1.0 Load Duration [PLF]

Span	Span Type and Min. Bearing	8¾" (8.75") Width									
		Beam Depth									
		9" (9.00")	12" (12.00")	15" (15.00")	18" (18.00")	21" (21.00")	24" (24.00")	27" (27.00")	30" (30.00")	33" (33.00")	36" (36.00")
10'	Simple	1,871	3,334	5,210	7,373	9,889	12,316	15,120	18,486	22,602	27,223
	Multiple	1,438	2,564	4,008	5,675	7,169	8,678	10,377	12,303	13,580	13,573
	Min. End/Int. Brg [in]	1.7 / 3.2	3 / 5.7	4.6 / 8.9	6.5 / 12.6	8.7 / 15.9	10.9 / 19.2	13.3 / 22.9	16.3 / 27.2	19.9 / 30	24 / 30
12'	Simple	1,211	2,308	3,542	5,016	6,729	8,679	10,862	13,186	15,626	18,473
	Multiple	993	1,773	2,723	3,857	5,177	6,678	7,893	9,211	10,669	11,298
	Min. End/Int. Brg [in]	1.5 / 3	2.5 / 4.7	3.8 / 7.3	5.3 / 10.3	7.1 / 13.8	9.2 / 17.7	11.5 / 21	14 / 24.5	16.6 / 28.3	19.6 / 30
14'	Simple	756	1,667	2,554	3,618	4,856	6,265	7,842	9,587	11,496	13,569
	Multiple	724	1,279	1,961	2,780	3,733	4,817	6,032	7,356	8,432	9,602
	Min. End/Int. Brg [in]	1.5 / 3	2.1 / 4	3.2 / 6.1	4.5 / 8.7	6 / 11.6	7.8 / 15	9.7 / 18.7	11.9 / 22.8	14.2 / 26.2	16.8 / 29.8
16'	Simple	500	1,205	1,922	2,724	3,657	4,720	5,911	7,227	8,668	10,232
	Multiple	550	960	1,474	2,091	2,809	3,627	4,543	5,556	6,665	7,870
	Min. End/Int. Brg [in]	1.5 / 3	1.7 / 3.5	2.7 / 5.3	3.9 / 7.5	5.2 / 10	6.7 / 12.9	8.4 / 16.2	10.3 / 19.8	12.3 / 23.7	14.5 / 27.9
18'	Simple	345	839	1,494	2,119	2,846	3,675	4,603	5,629	6,753	7,973
	Multiple	426	744	1,144	1,624	2,184	2,821	3,535	4,325	5,189	6,129
	Min. End/Int. Brg [in]	1.5 / 3	1.5 / 3	2.4 / 4.7	3.4 / 6.6	4.6 / 8.8	5.9 / 11.4	7.4 / 14.2	9 / 17.4	10.8 / 20.8	12.7 / 24.5
20'	Simple	247	604	1,191	1,691	2,272	2,935	3,678	4,499	5,399	6,375
	Multiple	338	591	911	1,294	1,741	2,251	2,822	3,454	4,145	4,897
	Min. End/Int. Brg [in]	1.5 / 3	1.5 / 3	2.1 / 4.1	3 / 5.9	4.1 / 7.9	5.3 / 10.1	6.6 / 12.7	8 / 15.5	9.6 / 18.5	11.3 / 21.9
22'	Simple	181	448	893	1,377	1,852	2,394	3,000	3,672	4,407	5,205
	Multiple	273	479	740	1,053	1,417	1,833	2,300	2,816	3,381	3,995
	Min. End/Int. Brg [in]	1.5 / 3	1.5 / 3	1.8 / 3.7	2.7 / 5.3	3.7 / 7.1	4.7 / 9.1	5.9 / 11.4	7.2 / 13.9	8.7 / 16.7	10.2 / 19.7
24'	Simple	135	339	680	1,141	1,535	1,985	2,490	3,048	3,659	4,323
	Multiple	211	395	611	870	1,173	1,519	1,906	2,335	2,804	3,315
	Min. End/Int. Brg [in]	1.5 / 3	1.5 / 3	1.5 / 3.4	2.5 / 4.8	3.3 / 6.4	4.3 / 8.3	5.4 / 10.4	6.6 / 12.7	7.9 / 15.2	9.3 / 17.9
26'	Simple	102	261	528	930	1,291	1,670	2,096	2,566	3,082	3,642
	Multiple	162	330	511	730	985	1,276	1,602	1,964	2,360	2,790
	Min. End/Int. Brg [in]	1.5 / 3	1.5 / 3	1.5 / 3.1	2.2 / 4.4	3.1 / 5.9	3.9 / 7.6	4.9 / 9.5	6 / 11.6	7.2 / 13.9	8.5 / 16.4
28'	Simple	78	204	417	737	1,098	1,422	1,785	2,187	2,628	3,106
	Multiple	126	279	433	619	836	1,085	1,363	1,671	2,009	2,377
	Min. End/Int. Brg [in]	1.5 / 3	1.5 / 3	1.5 / 3	1.9 / 4	2.8 / 5.4	3.6 / 7	4.5 / 8.7	5.5 / 10.7	6.6 / 12.8	7.8 / 15.1
30'	Simple	60	161	333	592	944	1,223	1,537	1,884	2,264	2,677
	Multiple	99	238	370	530	718	931	1,171	1,437	1,729	2,046
	Min. End/Int. Brg [in]	1.5 / 3	1.5 / 3	1.5 / 3	1.7 / 3.7	2.6 / 5	3.4 / 6.5	4.2 / 8.1	5.1 / 9.9	6.2 / 11.9	7.3 / 14

NOTES

- Span loads are limited by shear, moment, or deflection limits of L/360 for live load and L/240 for total load. The beam's self weight is included.
- Live load is considered to be 0.6 of the total load.
- Bearing lengths:
  - Bearing is required across the full width of the beam.
  - Bearing lengths shown are the minimum required at end and interior supports in inches.
  - Bearing lengths are based on the compressive strength, perpendicular-to-grain, of the beam material. Other bearing materials or design considerations may require longer bearing lengths.
- Table assumes:
  - Lateral support at each support and continuously along compression edges of the beam.
  - Load duration factor of 1.0.
  - Spans measured center-line to center-line of supports.
  - Maximum total length of 60'. Other sizes available, speak with your representative for assistance.
  - Unbalanced beams for simple and multiple spans, balanced beams can be calculated for multiple span conditions.
- For fire-resistent designs, use char rate calculation per the NDS. Contact Boise Cascade engineering for more information.
- Loads shown are intended for preliminary design purposes only. Analysis using appropriate software may result in higher allowable loads than shown.

Boise Cascade® ENGINEERED WOOD PRODUCTS

Floor Spans — 1.0 Load Duration [PLF]

Span	Span Type and Min. Bearing	10¾" (10.75") Width										
		Beam Depth										
		12" (12.00")	15" (15.00")	18" (18.00")	21" (21.00")	24" (24.00")	27" (27.00")	30" (30.00")	33" (33.00")	36" (36.00")	39" (39.00")	42" (42.00")
10'	Simple	4,097	6,269	8,873	11,900	15,131	18,576	22,712	27,768	33,196	33,438	33,430
	Multiple	3,151	4,824	6,829	8,808	10,662	12,749	15,115	16,684	16,676	16,668	16,660
	Min. End/Int. Brg [in]	/ 5.7	4.5 / 8.7	6.4 / 12.3	8.6 / 15.9	10.9 / 19.2	13.3 / 22.9	16.3 / 27.2	19.9 / 30	23.8 / 30	24 / 30	24 / 30
12'	Simple	2,784	4,262	6,035	8,097	10,444	13,071	15,976	19,155	22,607	26,328	27,840
	Multiple	2,139	3,277	4,642	6,229	8,036	9,697	11,317	13,108	13,881	13,873	13,865
	Min. End/Int. Brg [in]	2.4 / 4.7	3.7 / 7.1	5.2 / 10.1	7 / 13.5	9 / 17.4	11.3 / 21	13.8 / 24.5	16.5 / 28.3	19.5 / 30	22.7 / 30	24 / 30
14'	Simple	2,005	3,073	4,353	5,843	7,538	9,437	11,536	13,834	16,329	19,019	21,902
	Multiple	1,539	2,360	3,345	4,491	5,796	7,258	8,875	10,359	11,796	11,877	11,869
	Min. End/Int. Brg [in]	/ 3.9	3.1 / 6	4.4 / 8.5	5.9 / 11.4	7.6 / 14.7	9.5 / 18.4	11.6 / 22.4	13.9 / 26.2	16.5 / 29.8	19.2 / 30	22.1 / 30
16'	Simple	1,480	2,312	3,277	4,401	5,680	7,112	8,696	10,430	12,313	14,343	16,519
	Multiple	1,155	1,773	2,516	3,380	4,364	5,466	6,685	8,020	9,470	10,379	10,372
	Min. End/Int. Brg [in]	1.7 / 3.4	2.7 / 5.2	3.8 / 7.3	5.1 / 9.8	6.6 / 12.7	8.2 / 15.8	10 / 19.4	12 / 23.2	14.2 / 27.4	16.5 / 30	19 / 30
18'	Simple	1,030	1,797	2,549	3,424	4,421	5,538	6,773	8,126	9,594	11,178	12,875
	Multiple	895	1,376	1,954	2,627	3,394	4,253	5,203	6,244	7,374	8,593	9,207
	Min. End/Int. Brg [in]	1.5 / 3	2.4 / 4.6	3.3 / 6.4	4.5 / 8.6	5.8 / 11.1	7.2 / 13.9	8.8 / 17	10.6 / 20.4	12.5 / 24	14.5 / 28	16.7 / 30
20'	Simple	743	1,432	2,034	2,734	3,531	4,425	5,413	6,496	7,671	8,939	10,298
	Multiple	711	1,095	1,557	2,095	2,708	3,395	4,155	4,987	5,892	6,867	7,913
	Min. End/Int. Brg [in]	1.5 / 3	2.1 / 4.1	3 / 5.7	4 / 7.7	5.1 / 9.9	6.4 / 12.4	7.9 / 15.1	9.4 / 18.2	11.1 / 21.4	12.9 / 24.9	14.9 / 28.7
22'	Simple	550	1,097	1,656	2,228	2,879	3,609	4,417	5,302	6,263	7,299	8,410
	Multiple	576	889	1,266	1,705	2,205	2,766	3,387	4,067	4,806	5,603	6,458
	Min. End/Int. Brg [in]	1.5 / 3	1.8 / 3.7	2.7 / 5.2	3.6 / 6.9	4.6 / 8.9	5.8 / 11.2	7.1 / 13.6	8.5 / 16.3	10 / 19.3	11.7 / 22.5	13.4 / 25.8
24'	Simple	417	836	1,372	1,847	2,388	2,995	3,666	4,402	5,201	6,063	6,987
	Multiple	475	734	1,047	1,411	1,826	2,292	2,808	3,373	3,988	4,650	5,361
	Min. End/Int. Brg [in]	1.5 / 3	1.5 / 3.3	2.4 / 4.7	3.3 / 6.3	4.2 / 8.1	5.3 / 10.1	6.4 / 12.4	7.7 / 14.9	9.1 / 17.5	10.6 / 20.4	12.2 / 23.5
26'	Simple	321	649	1,142	1,553	2,009	2,521	3,087	3,708	4,382	5,109	5,889
	Multiple	397	615	877	1,184	1,534	1,927	2,362	2,838	3,356	3,915	4,514
	Min. End/Int. Brg [in]	1.5 / 3	1.5 / 3	2.2 / 4.3	3 / 5.8	3.9 / 7.4	4.8 / 9.3	5.9 / 11.3	7.1 / 13.6	8.3 / 16	9.7 / 18.7	11.2 / 21.5
28'	Simple	251	512	905	1,321	1,710	2,147	2,631	3,161	3,737	4,358	5,025
	Multiple	335	520	744	1,006	1,304	1,639	2,010	2,417	2,859	3,336	3,848
	Min. End/Int. Brg [in]	1.5 / 3	1.5 / 3	1.9 / 4	2.8 / 5.3	3.6 / 6.8	4.4 / 8.6	5.4 / 10.5	6.5 / 12.5	7.7 / 14.8	8.9 / 17.2	10.3 / 19.8
30'	Simple	198	409	727	1,135	1,471	1,848	2,265	2,723	3,220	3,757	4,332
	Multiple	285	445	637	863	1,120	1,408	1,728	2,079	2,461	2,872	3,314
	Min. End/Int. Brg [in]	1.5 / 3	1.5 / 3	1.7 / 3.7	2.6 / 4.9	3.3 / 6.3	4.1 / 7.9	5 / 9.7	6 / 11.6	7.1 / 13.7	8.3 / 16	9.5 / 18.4

NOTES

- Span loads are limited by shear, moment, or deflection limits of L/360 for live load and L/240 for total load. The beam's self weight is included.
- Live load is considered to be 0.6 of the total load.
- Bearing lengths:
  - Bearing is required across the full width of the beam.
  - Bearing lengths shown are the minimum required at end and interior supports in inches.
  - Bearing lengths are based on the compressive strength, perpendicular-to-grain, of the beam material. Other bearing materials or design considerations may require longer bearing lengths.
- Table assumes:
  - Lateral support at each support and continuously along compression edges of the beam.
  - Load duration factor of 1.0.
  - Spans measured center-line to center-line of supports.
  - Maximum total length of 60'. Other sizes available, speak with your representative for assistance.
  - Unbalanced beams for simple and multiple spans, balanced beams can be calculated for multiple span conditions.
- For fire-resistent designs, use char rate calculation per the NDS. Contact Boise Cascade engineering for more information.
- Loads shown are intended for preliminary design purposes only. Analysis using appropriate software may result in higher allowable loads than shown.

Boise Cascade® ENGINEERED WOOD PRODUCTS

Floor Spans — 1.0 Load Duration [PLF]

Span	Span Type and Min. Bearing	12¼" (12.25") Width										
		Beam Depth										
		12" (12.00")	15" (15.00")	18" (18.00")	21" (21.00")	24" (24.00")	27" (27.00")	30" (30.00")	33" (33.00")	36" (36.00")	39" (39.00")	42" (42.00")
10'	Simple	4,608	7,051	9,979	13,384	17,242	21,168	25,881	31,640	37,336	38,104	38,095
	Multiple	3,544	5,425	7,680	10,037	12,150	14,528	17,224	19,012	19,003	18,994	18,985
	Min. End/Int. Brg [in]	2.9 / 5.6	4.5 / 8.6	6.3 / 12.1	8.4 / 15.9	10.9 / 19.2	13.3 / 22.9	16.3 / 27.2	19.9 / 30	23.5 / 30	24 / 30	24 / 30
12'	Simple	3,131	4,794	6,788	9,107	11,746	14,701	17,968	21,544	25,425	29,610	31,725
	Multiple	2,405	3,685	5,220	7,005	9,038	11,050	12,896	14,937	15,818	15,809	15,800
	Min. End/Int. Brg [in]	2.4 / 4.6	3.6 / 7	5.2 / 9.9	6.9 / 13.3	8.9 / 17.2	11.1 / 21	13.6 / 24.5	16.3 / 28.3	19.2 / 30	22.4 / 30	24 / 30
14'	Simple	2,255	3,456	4,896	6,571	8,478	10,613	12,974	15,559	18,364	21,390	24,632
	Multiple	1,730	2,653	3,762	5,051	6,519	8,163	9,981	11,805	13,442	13,534	13,525
	Min. End/Int. Brg [in]	2 / 3.9	3.1 / 5.9	4.4 / 8.4	5.8 / 11.2	7.5 / 14.5	9.4 / 18.1	11.5 / 22.1	13.8 / 26.2	16.2 / 29.8	18.9 / 30	21.8 / 30
16'	Simple	1,687	2,600	3,686	4,949	6,387	7,998	9,780	11,730	13,848	16,131	18,578
	Multiple	1,298	1,994	2,829	3,800	4,907	6,147	7,518	9,019	10,650	11,828	11,819
	Min. End/Int. Brg [in]	1.7 / 3.4	2.7 / 5.1	3.8 / 7.2	5 / 9.7	6.5 / 12.5	8.1 / 15.6	9.9 / 19.1	11.9 / 22.9	14 / 27	16.3 / 30	18.8 / 30
18'	Simple	1,174	2,020	2,866	3,851	4,972	6,228	7,617	9,138	10,790	12,571	14,480
	Multiple	1,006	1,547	2,197	2,954	3,816	4,782	5,851	7,022	8,293	9,663	10,492
	Min. End/Int. Brg [in]	1.5 / 3	2.3 / 4.5	3.3 / 6.4	4.4 / 8.5	5.7 / 11	7.1 / 13.7	8.7 / 16.8	10.4 / 20.1	12.3 / 23.7	14.3 / 27.6	16.5 / 30
20'	Simple	846	1,610	2,287	3,074	3,971	4,976	6,088	7,305	8,627	10,052	11,581
	Multiple	799	1,231	1,750	2,355	3,045	3,817	4,672	5,608	6,625	7,722	8,898
	Min. End/Int. Brg [in]	1.5 / 3	2.1 / 4	2.9 / 5.7	3.9 / 7.6	5.1 / 9.8	6.4 / 12.2	7.8 / 14.9	9.3 / 17.9	11 / 21.1	12.8 / 24.6	14.7 / 28.3
22'	Simple	627	1,250	1,862	2,505	3,238	4,059	4,967	5,962	7,043	8,208	9,458
	Multiple	648	1,000	1,423	1,917	2,479	3,110	3,808	4,573	5,404	6,300	7,262
	Min. End/Int. Brg [in]	1.5 / 3	1.8 / 3.6	2.6 / 5.1	3.5 / 6.8	4.6 / 8.8	5.7 / 11	7 / 13.5	8.4 / 16.1	9.9 / 19	11.5 / 22.2	13.2 / 25.5
24'	Simple	475	952	1,542	2,076	2,685	3,367	4,123	4,950	5,848	6,818	7,857
	Multiple	534	825	1,176	1,586	2,053	2,577	3,157	3,793	4,484	5,229	6,028
	Min. End/Int. Brg [in]	1.5 / 3	1.5 / 3.3	2.4 / 4.6	3.2 / 6.2	4.2 / 8	5.2 / 10	6.3 / 12.2	7.6 / 14.7	9 / 17.3	10.4 / 20.1	12 / 23.2
26'	Simple	366	739	1,295	1,745	2,259	2,834	3,471	4,169	4,927	5,745	6,622
	Multiple	446	691	986	1,331	1,725	2,166	2,655	3,191	3,773	4,402	5,076
	Min. End/Int. Brg [in]	1.5 / 3	1.5 / 3	2.2 / 4.2	3 / 5.7	3.8 / 7.3	4.8 / 9.2	5.8 / 11.2	7 / 13.4	8.2 / 15.8	9.6 / 18.4	11 / 21.2
28'	Simple	286	583	1,031	1,485	1,923	2,414	2,958	3,554	4,201	4,900	5,650
	Multiple	376	585	836	1,130	1,466	1,842	2,260	2,717	3,214	3,751	4,326
	Min. End/Int. Brg [in]	1.5 / 3	1.5 / 3	1.9 / 3.9	2.7 / 5.2	3.5 / 6.8	4.4 / 8.5	5.4 / 10.3	6.4 / 12.4	7.6 / 14.6	8.8 / 17	10.2 / 19.6
30'	Simple	226	466	828	1,276	1,654	2,078	2,547	3,061	3,620	4,224	4,871
	Multiple	321	500	716	969	1,258	1,583	1,943	2,337	2,766	3,229	3,726
	Min. End/Int. Brg [in]	1.5 / 3	1.5 / 3	1.7 / 3.6	2.5 / 4.9	3.3 / 6.3	4.1 / 7.8	5 / 9.6	6 / 11.5	7 / 13.5	8.2 / 15.8	9.4 / 18.1

NOTES

- Span loads are limited by shear, moment, or deflection limits of L/360 for live load and L/240 for total load. The beam's self weight is included.
- Live load is considered to be 0.6 of the total load.
- Bearing lengths:
  - Bearing is required across the full width of the beam.
  - Bearing lengths shown are the minimum required at end and interior supports in inches.
  - Bearing lengths are based on the compressive strength, perpendicular-to-grain, of the beam material. Other bearing materials or design considerations may require longer bearing lengths.
- Table assumes:
  - Lateral support at each support and continuously along compression edges of the beam.
  - Load duration factor of 1.0.
  - Spans measured center-line to center-line of supports.
  - Maximum total length of 60'. Other sizes available, speak with your representative for assistance.
  - Unbalanced beams for simple and multiple spans, balanced beams can be calculated for multiple span conditions.
- For fire-resistent designs, use char rate calculation per the NDS. Contact Boise Cascade engineering for more information.
- Loads shown are intended for preliminary design purposes only. Analysis using appropriate software may result in higher allowable loads than shown.

Boise Cascade® ENGINEERED WOOD PRODUCTS

Floor Spans — 1.0 Load Duration [PLF]

Span	Span Type and Min. Bearing	14¼" (14.25") Width									
		Beam Depth									
		15" (15.00")	18" (18.00")	21" (21.00")	24" (24.00")	27" (27.00")	30" (30.00")	33" (33.00")	36" (36.00")	39" (39.00")	42" (42.00")
10'	Simple	8,078	11,433	15,335	19,774	24,624	30,106	36,251	42,778	44,325	44,315
	Multiple	6,215	8,799	11,676	14,133	16,900	20,036	22,116	22,105	22,095	22,085
	Min. End/Int. Brg [in]	4.4 / 8.5	6.2 / 12	8.3 / 15.9	10.7 / 19.2	13.3 / 22.9	16.3 / 27.2	19.6 / 30	23.2 / 30	24 / 30	24 / 30
12'	Simple	5,492	7,776	10,434	13,457	16,843	20,586	24,683	29,131	33,926	36,905
	Multiple	4,221	5,980	8,026	10,354	12,854	15,001	17,376	18,400	18,390	18,380
	Min. End/Int. Brg [in]	3.6 / 6.9	5.1 / 9.8	6.8 / 13.1	8.8 / 16.9	11 / 21	13.4 / 24.5	16.1 / 28.3	19 / 30	22.1 /	24 / 30
14'	Simple	3,959	5,609	7,528	9,713	12,159	14,864	17,826	21,040	24,506	28,222
	Multiple	3,040	4,309	5,786	7,468	9,351	11,434	13,714	15,637	15,743	15,733
	Min. End/Int. Brg [in]	3 / 5.8	4.3 / 8.3	5.7 / 11.1	7.4 / 14.3	9.3 / 17.8	11.3 / 21.8	13.6 / 26.1	16 / 29.8	18.6 /	21.4 / 30
16'	Simple	2,978	4,222	5,669	7,317	9,163	11,204	13,439	15,865	18,481	21,285
	Multiple	2,284	3,240	4,354	5,621	7,042	8,613	10,333	12,201	13,759	13,748
	Min. End/Int. Brg [in]	2.6 / 5	3.7 / 7.1	5 / 9.6	6.4 / 12.3	8 / 15.4	9.8 / 18.8	11.7 / 22.6	13.8 / 26.6	16.1 /	18.5 / 30
18'	Simple	2,314	3,283	4,411	5,696	7,135	8,726	10,469	12,361	14,401	16,589
	Multiple	1,772	2,516	3,384	4,371	5,478	6,703	8,044	9,500	11,070	12,205
	Min. End/Int. Brg [in]	2.3 / 4.4	3.3 / 6.3	4.4 / 8.4	5.6 / 10.8	7 / 13.5	8.6 / 16.5	10.3 / 19.8	12.1 / 23.4	14.1 / 27.2	16.3 / 30
20'	Simple	1,844	2,619	3,521	4,549	5,700	6,974	8,368	9,883	11,516	13,267
	Multiple	1,410	2,005	2,698	3,487	4,372	5,352	6,424	7,589	8,846	10,194
	Min. End/Int. Brg [in]	2 / 3.9	2.9 / 5.6	3.9 / 7.5	5 / 9.6	6.3 / 12.1	7.6 / 14.7	9.2 / 17.6	10.8 / 20.8	12.6 / 24.2	14.5 / 27.9
22'	Simple	1,454	2,133	2,869	3,708	4,649	5,690	6,830	8,067	9,403	10,834
	Multiple	1,145	1,630	2,195	2,840	3,562	4,362	5,238	6,190	7,217	8,318
	Min. End/Int. Brg [in]	1.8 / 3.6	2.6 / 5	3.5 / 6.7	4.5 / 8.7	5.6 / 10.9	6.9 / 13.3	8.2 / 15.9	9.7 / 18.7	11.3 / 21.8	13 / 25.1
24'	Simple	1,108	1,766	2,378	3,075	3,857	4,722	5,670	6,699	7,810	9,001
	Multiple	945	1,347	1,816	2,351	2,952	3,616	4,344	5,136	5,989	6,905
	Min. End/Int. Brg [in]	1.5 / 3.2	2.4 / 4.6	3.2 / 6.1	4.1 / 7.9	5.1 / 9.9	6.3 / 12	7.5 / 14.4	8.8 / 17	10.3 / 19.8	11.8 / 22.8
26'	Simple	860	1,483	1,999	2,587	3,246	3,976	4,775	5,644	6,581	7,586
	Multiple	791	1,129	1,524	1,975	2,481	3,041	3,655	4,322	5,042	5,814
	Min. End/Int. Brg [in]	1.5 / 3	2.2 / 4.2	2.9 / 5.6	3.7 / 7.2	4.7 / 9	5.7 / 11	6.9 / 13.2	8.1 / 15.6	9.4 / 18.2	10.9 / 20.9
28'	Simple	678	1,200	1,700	2,202	2,765	3,388	4,070	4,812	5,613	6,471
	Multiple	669	957	1,294	1,678	2,110	2,587	3,111	3,681	4,296	4,955
	Min. End/Int. Brg [in]	1.5 / 3	1.9 / 3.9	2.7 / 5.2	3.5 / 6.7	4.3 / 8.3	5.3 / 10.2	6.3 / 12.2	7.5 / 14.4	8.7 / 16.7	10 / 19.3
30'	Simple	542	964	1,461	1,894	2,379	2,917	3,506	4,146	4,837	5,579
	Multiple	572	820	1,110	1,441	1,812	2,224	2,676	3,168	3,698	4,267
	Min. End/Int. Brg [in]	1.5 / 3	1.7 / 3.6	2.5 / 4.8	3.2 / 6.2	4 / 7.7	4.9 / 9.4	5.9 / 11.3	6.9 / 13.3	8.1 / 15.5	9.3 / 17.9

NOTES

- Span loads are limited by shear, moment, or deflection limits of L/360 for live load and L/240 for total load. The beam's self weight is included.
- Live load is considered to be 0.6 of the total load.
- Bearing lengths:
  - Bearing is required across the full width of the beam.
  - Bearing lengths shown are the minimum required at end and interior supports in inches.
  - Bearing lengths are based on the compressive strength, perpendicular-to-grain, of the beam material. Other bearing materials or design considerations may require longer bearing lengths.
- Table assumes:
  - Lateral support at each support and continuously along compression edges of the beam.
  - Load duration factor of 1.0.
  - Spans measured center-line to center-line of supports.
  - Maximum total length of 60'. Other sizes available, speak with your representative for assistance.
  - Unbalanced beams for simple and multiple spans, balanced beams can be calculated for multiple span conditions.
- For fire-resistent designs, use char rate calculation per the NDS. Contact Boise Cascade engineering for more information.
- Loads shown are intended for preliminary design purposes only. Analysis using appropriate software may result in higher allowable loads than shown.

Boise Cascade® ENGINEERED WOOD PRODUCTS

Roof - Snow Spans — 1.15 Load Duration [PLF]

Span	Span Type and Min. Bearing	3⅛" (3.125") Width							5⅛" (5.125") Width						
		Beam Depth							Beam Depth						
		6" (6.00")	9" (9.00")	12" (12.00")	15" (15.00")	18" (18.00")	21" (21.00")	24" (24.00")	6" (6.00")	9" (9.00")	12" (12.00")	15" (15.00")	18" (18.00")	21" (21.00")	24" (24.00")
10'	Simple	295	769	1,371	2,145	3,091	4,086	5,061	485	1,262	2,248	3,518	5,070	6,702	8,300
	Multiple	261	592	1,055	1,651	2,380	2,947	3,567	429	970	1,730	2,707	3,903	4,833	5,850
	Min. End/Int. Brg [in]	1.5 / 3	1.9 / 3.7	3.4 / 6.5	5.3 / 10.2	7.6 / 14.7	10.1 / 18.2	12.5 / 22.1	1.5 / 3	1.9 / 3.7	3.4 / 6.5	5.3 / 10.2	7.6 / 14.7	10.1 / 18.2	12.5 / 22.1
12'	Simple	169	532	949	1,486	2,143	2,919	3,791	277	873	1,557	2,437	3,514	4,787	6,173
	Multiple	180	409	730	1,143	1,648	2,246	2,752	295	670	1,197	1,874	2,703	3,684	4,514
	Min. End/Int. Brg [in]	1.5 / 3	1.6 / 3.1	2.8 / 5.5	4.4 / 8.5	6.4 / 12.3	8.7 / 16.7	11.3 / 20.5	1.5 / 3	1.6 / 3.1	2.8 / 5.5	4.4 / 8.5	6.4 / 12.3	8.7 / 16.7	11.2 / 20.5
14'	Simple	105	362	695	1,089	1,571	2,140	2,798	172	594	1,140	1,786	2,576	3,456	4,458
	Multiple	131	298	534	837	1,207	1,646	2,153	215	489	875	1,372	1,980	2,658	3,429
	Min. End/Int. Brg [in]	1.5 / 3	1.5 / 3	2.4 / 4.7	3.8 / 7.3	5.5 / 10.5	7.4 / 14.3	9.7 / 18.7	1.5 / 3	1.5 / 3	2.4 / 4.7	3.8 / 7.3	5.5 / 10.5	7.3 / 14.1	9.4 / 18.2
16'	Simple	69	240	530	831	1,199	1,635	2,138	113	394	869	1,363	1,940	2,605	3,360
	Multiple	96	227	406	638	921	1,257	1,644	158	372	667	1,046	1,491	2,002	2,584
	Min. End/Int. Brg [in]	1.5 / 3	1.5 / 3	2.1 / 4.1	3.3 / 6.4	4.8 / 9.2	6.5 / 12.5	8.5 / 16.4	1.5 / 3	1.5 / 3	2.1 / 4.1	3.3 / 6.4	4.7 / 9.1	6.3 / 12.2	8.1 / 15.7
18'	Simple		167	402	654	945	1,288	1,678	77	274	660	1,065	1,510	2,028	2,618
	Multiple		178	319	502	725	990	1,289	111	292	523	817	1,159	1,557	2,011
	Min. End/Int. Brg [in]		1.5 / 3	1.8 / 3.6	2.9 / 5.7	4.2 / 8.2	5.8 / 11.1	7.5 / 14.5	1.5 / 3	1.5 / 3	1.8 / 3.6	2.9 / 5.6	4.1 /	5.5 / 10.7	7.2 / 13.8
20'	Simple		120	291	528	763	1,039	1,341	54	196	477	850	1,206	1,620	2,092
	Multiple		143	257	404	585	797	1,030	80	234	421	651	925	1,243	1,606
	Min. End/Int. Brg [in]		1.5 / 3	1.5 / 3.3	2.7 / 5.1	3.8 / 7.4	5.2 / 10	6.7 / 12.9	1.5 / 3	1.5 / 3	1.5 / 3.3	2.6 / 5	3.7 / 7.1	4.9 / 9.5	6.4 / 12.3
22'	Simple		88	216	429	628	848	1,095		145	355	693	983	1,322	1,707
	Multiple		117	211	332	481	650	840		192	344	530	753	1,013	1,309
	Min. End/Int. Brg [in]		1.5 / 3	1.5 / 3	2.4 / 4.6	3.5 / 6.7	4.7 / 9	6 / 11.6		1.5 / 3	1.5 / 3	2.3 / 4.5	3.3 / 6.4	4.5 / 8.6	5.7 / 11.1
24'	Simple		66	164	328	523	703	909		109	270	537	815	1,097	1,417
	Multiple		96	176	277	400	539	696		158	284	438	623	839	1,085
	Min. End/Int. Brg [in]		1.5 / 3	1.5 / 3	2 / 4.3	3.2 / 6.1	4.2 / 8.2	5.5 / 10.6		1.5 / 3	1.5 / 3	2 / 4.1	3 / 5.8	4 / 7.8	5.2 / 10
26'	Simple		51	127	255	440	592	765		83	209	419	686	923	1,193
	Multiple		75	148	234	336	453	586		123	238	367	523	705	913
	Min. End/Int. Brg [in]		1.5 / 3	1.5 / 3	1.7 / 3.9	2.9 / 5.6	3.9 / 7.5	5 / 9.7		1.5 / 3	1.5 / 3	1.7 / 3.8	2.8 / 5.3	3.7 / 7.1	4.8 / 9.2
28'	Simple			100	202	355	504	652		64	164	332	583	786	1017
	Multiple			127	200	286	385	499		96	201	312	445	600	777
	Min. End/Int. Brg [in]			1.5 / 3	1.5 / 3.6	2.5 / 5.2	3.6 / 6.9	4.6 / 8.9		1.5 / 3	1.5 / 3	1.5 / 3.5	2.5 / 4.9	3.4 / 6.6	4.4 / 8.5
30'	Simple			80	162	286	434	562		50	131	266	470	677	876
	Multiple			109	172	245	331	429		76	172	267	382	515	668
	Min. End/Int. Brg [in]			1.5 / 3	1.5 / 3.4	2.2 / 4.8	3.3 / 6.4	4.3 / 8.3		1.5 / 3	1.5 / 3	1.5 / 3.2	2.2 / 4.5	3.2 / 6.1	4.1 / 7.9

NOTES

- Span loads are limited by shear, moment, or deflection limits of L/240 for live load and L/180 for total load, The beam's self weight is included.
- Snow load is considered to be 0.75 of the total load.
- Bearing lengths
  - Bearing is required across the full width of the beam.
  - Bearing lengths shown are the minimum required at end and interior supports in inches.
  - Bearing lengths are based on the compressive strength, perpendicular-to-grain, of the beam material. Other bearing materials or design considerations may require longer bearing lengths.
- Table assumes:
  - Lateral support at each support and continuously along compression edges of the beam.
  - Load duration factor of 1.15.
  - Spans measured center-line to center-line of supports.
  - Maximum total length of 60'. Other sizes available, speak with your representative for assistance.
  - Unbalanced beams for simple and multiple spans, balanced beams can be calculated for multiple span conditions.
- For fire-resistent designs, use char rate calculation per the NDS. Contact Boise Cascade engineering for more information.
- Loads shown are intended for preliminary design purposes only. Analysis using appropriate software may result in higher allowable loads than shown.

Boise Cascade® ENGINEERED WOOD PRODUCTS

Roof - Snow Spans — 1.15 Load Duration [PLF]

Span	Span Type and Min. Bearing	6¾" (6.75") Width							
		Beam Depth							
		9" (9.00")	12" (12.00")	15" (15.00")	18" (18.00")	21" (21.00")	24" (24.00")	27" (27.00")	30" (30.00")
10'	Simple	1,662	2,961	4,633	6,677	8,827	10,932	13,420	16,407
	Multiple	1,278	2,278	3,566	5,140	6,365	7,705	9,212	10,481
	Min. End/Int. Brg [in]	1.9 / 3.7	3.4 / 6.5	5.3 / 10.2	7.6 / 14.7	10.1 / 18.2	12.5 / 22.1	15.3 / 26.4	18.8 / 30
12'	Simple	1,150	2,050	3,210	4,572	6,133	7,909	9,830	11,705
	Multiple	883	1,576	2,469	3,517	4,719	5,945	7,008	8,179
	Min. End/Int. Brg [in]	1.6 / 3.1	2.8 / 5.5	4.4 / 8.5	6.3 / 12.1	8.4 / 16.3	10.9 / 20.5	13.5 / 24.1	16.1 / 28.1
14'	Simple	782	1,501	2,330	3,299	4,427	5,711	7,148	8,737
	Multiple	645	1,153	1,790	2,536	3,405	4,393	5,500	6,533
	Min. End/Int. Brg [in]	1.5 / 3	2.4 / 4.7	3.8 / 7.2	5.3 / 10.2	7.1 / 13.7	9.2 / 17.7	11.5 / 22.1	14 / 26.3
16'	Simple	519	1,144	1,754	2,485	3,336	4,305	5,389	6,589
	Multiple	490	878	1,346	1,909	2,564	3,309	4,144	5,067
	Min. End/Int. Brg [in]	1.5 / 3	2.1 / 4.1	3.2 / 6.2	4.6 / 8.8	6.1 / 11.8	7.9 / 15.3	9.9 / 19.1	12.1 / 23.3
18'	Simple	360	869	1,364	1,934	2,598	3,353	4,199	5,134
	Multiple	384	681	1,046	1,484	1,994	2,575	3,226	3,946
	Min. End/Int. Brg [in]	1.5 / 3	1.8 / 3.6	2.8 / 5.5	4 / 7.8	5.4 / 10.4	7 / 13.4	8.7 / 16.8	10.6 / 20.5
20'	Simple	259	628	1,089	1,544	2,075	2,679	3,356	4,105
	Multiple	308	542	833	1,184	1,592	2,056	2,577	3,153
	Min. End/Int. Brg [in]	1.5 / 3	1.5 / 3.2	2.5 / 4.9	3.6 / 6.9	4.8 / 9.3	6.2 / 11.9	7.8 / 14.9	9.5 / 18.2
22'	Simple	191	467	887	1,259	1,692	2,186	2,740	3,352
	Multiple	251	440	678	964	1,297	1,676	2,102	2,572
	Min. End/Int. Brg [in]	1.5 / 3	1.5 / 3	2.3 / 4.4	3.2 / 6.2	4.3 / 8.3	5.6 / 10.8	7 / 13.5	8.5 / 16.4
24'	Simple	143	355	708	1,044	1,404	1,815	2,275	2,784
	Multiple	207	363	561	798	1,074	1,390	1,743	2,134
	Min. End/Int. Brg [in]	1.5 / 3	1.5 / 3	2 / 4	2.9 / 5.7	3.9 / 7.6	5.1 / 9.8	6.3 / 12.2	7.7 / 14.9
26'	Simple	110	275	551	878	1,182	1,528	1,916	2,345
	Multiple	162	304	470	670	903	1,169	1,467	1,797
	Min. End/Int. Brg [in]	1.5 / 3	1.5 / 3	1.7 / 3.7	2.7 / 5.2	3.6 / 6.9	4.6 / 8.9	5.8 / 11.2	7.1 / 13.7
28'	Simple	85	216	437	747	1,006	1,302	1,633	2,000
	Multiple	127	257	399	569	768	995	1,249	1,531
	Min. End/Int. Brg [in]	1.5 / 3	1.5 / 3	1.5 / 3.4	2.5 / 4.8	3.3 / 6.4	4.3 / 8.2	5.4 / 10.3	6.5 / 12.6
30'	Simple	66	172	350	618	866	1,121	1,407	1,724
	Multiple	101	220	342	488	660	855	1,074	1,318
	Min. End/Int. Brg [in]	1.5 / 3	1.5 / 3	1.5 / 3.1	2.2 / 4.4	3.1 / 5.9	4 / 7.6	5 / 9.6	6.1 / 11.7

NOTES

- Span loads are limited by shear, moment, or deflection limits of L/240 for live load and L/180 for total load. The beam's self weight is included.
- Snow load is considered to be 0.75 of the total load.
- Bearing lengths:
  - Bearing is required across the full width of the beam.
  - Bearing lengths shown are the minimum required at end and interior supports in inches.
  - Bearing lengths are based on the compressive strength, perpendicular-to-grain, of the beam material. Other bearing materials or design considerations may require longer bearing lengths.
- Table assumes:
  - Lateral support at each support and continuously along compression edges of the beam.
  - Load duration factor of 1.15.
  - Spans measured center-line to center-line of supports.
  - Maximum total length of 60'. Other sizes available, speak with your representative for assistance.
  - Unbalanced beams for simple and multiple spans, balanced beams can be calculated for multiple span conditions.
- For fire-resistent designs, use char rate calculation per the NDS. Contact Boise Cascade engineering for more information.
- Loads shown are intended for preliminary design purposes only. Analysis using appropriate software may result in higher allowable loads than shown.

Roof - Snow Spans — 1.15 Load Duration [PLF]

Span	Span Type and Min. Bearing	8¾" (8.75") Width									
		Beam Depth									
		9" (9.00")	12" (12.00")	15" (15.00")	18" (18.00")	21" (21.00")	24" (24.00")	27" (27.00")	30" (30.00")	33" (33.00")	36" (36.00")
10'	Simple	2,154	3,838	5,996	8,485	11,379	14,171	17,396	21,269	26,003	27,223
	Multiple	1,656	2,953	4,615	6,532	8,251	9,988	11,942	13,586	13,580	13,573
	Min. End/Int. Brg [in]	1.9 / 3.7	3.4 / 6.5	5.3 / 10.2	7.5 / 14.4	10 / 18.2	12.5 / 22.1	15.3 / 26.4	18.8 / 30	22.9 / 30	24 / 30
12'	Simple	1,490	2,658	4,078	5,774	7,745	9,988	12,500	15,174	17,980	21,256
	Multiple	1,144	2,043	3,136	4,442	5,960	7,688	9,085	10,602	11,305	11,298
	Min. End/Int. Brg [in]	1.6 / 3.1	2.8 / 5.5	4.3 / 8.4	6.1 / 11.8	8.2 / 15.8	10.6 / 20.4	13.2 / 24.1	16.1 / 28.1	19 / 30	22.5 / 30
14'	Simple	1,014	1,921	2,942	4,166	5,591	7,212	9,027	11,034	13,231	15,616
	Multiple	836	1,475	2,260	3,203	4,299	5,548	6,945	8,469	9,680	9,673
	Min. End/Int. Brg [in]	1.5 / 3	2.4 / 4.6	3.7 / 7.1	5.2 / 10	6.9 / 13.4	8.9 / 17.2	11.2 / 21.5	13.7 / 26.3	16.4 / 30	19.3 / 30
16'	Simple	673	1,445	2,215	3,138	4,213	5,436	6,806	8,320	9,978	11,779
	Multiple	635	1,108	1,700	2,410	3,237	4,178	5,233	6,399	7,676	8,455
	Min. End/Int. Brg [in]	1.5 / 3	2.1 / 4	3.2 / 6.1	4.5 / 8.6	6 / 11.5	7.7 / 14.9	9.7 / 18.6	11.8 / 22.7	14.1 / 27.2	16.7 / 30
18'	Simple	467	1,123	1,722	2,442	3,280	4,234	5,302	6,483	7,777	9,181
	Multiple	493	859	1,320	1,874	2,518	3,252	4,074	4,983	5,978	7,059
	Min. End/Int. Brg [in]	1.5 / 3	1.8 / 3.5	2.8 / 5.3	3.9 / 7.6	5.3 / 10.1	6.8 / 13.1	8.5 / 16.3	10.4 / 20	12.4 / 23.9	14.6 / 28.2
20'	Simple	335	814	1,374	1,950	2,620	3,383	4,238	5,184	6,219	7,343
	Multiple	391	684	1,052	1,494	2,009	2,596	3,254	3,981	4,778	5,643
	Min. End/Int. Brg [in]	1.5 / 3	1.5 / 3.1	2.5 / 4.8	3.5 / 6.7	4.7 / 9	6 / 11.6	7.6 / 14.6	9.2 / 17.8	11.1 / 21.3	13 / 25.1
22'	Simple	247	606	1,119	1,589	2,137	2,760	3,459	4,232	5,078	5,997
	Multiple	317	555	855	1,216	1,637	2,116	2,653	3,247	3,898	4,605
	Min. End/Int. Brg [in]	1.5 / 3	1.5 / 3	2.2 / 4.3	3.1 / 6.1	4.2 / 8.1	5.4 / 10.5	6.8 / 13.1	8.3 / 16	10 / 19.2	11.7 / 22.6
24'	Simple	186	461	918	1,317	1,772	2,291	2,872	3,514	4,218	4,983
	Multiple	261	458	707	1,007	1,356	1,754	2,200	2,694	3,236	3,824
	Min. End/Int. Brg [in]	1.5 / 3	1.5 / 3	2 / 3.9	2.9 / 5.5	3.8 / 7.4	4.9 / 9.5	6.2 / 11.9	7.5 / 14.5	9 / 17.4	10.7 / 20.6
26'	Simple	142	357	715	1,108	1,491	1,928	2,418	2,961	3,555	4,200
	Multiple	210	383	593	845	1,139	1,475	1,851	2,268	2,724	3,220
	Min. End/Int. Brg [in]	1.5 / 3	1.5 / 3	1.7 / 3.6	2.6 / 5	3.5 / 6.8	4.5 / 8.7	5.7 / 10.9	6.9 / 13.3	8.3 / 16	9.8 / 18.8
28'	Simple	110	281	566	942	1,270	1,643	2,062	2,525	3,032	3,584
	Multiple	165	324	503	718	969	1,255	1,576	1,932	2,321	2,745
	Min. End/Int. Brg [in]	1.5 / 3	1.5 / 3	1.5 / 3.3	2.4 / 4.7	3.2 / 6.2	4.2 / 8	5.2 / 10.1	6.4 / 12.3	7.6 / 14.7	9 / 17.4
30'	Simple	86	223	454	802	1,093	1,415	1,776	2,176	2,614	3,090
	Multiple	130	277	431	616	832	1,079	1,356	1,663	1,999	2,364
	Min. End/Int. Brg [in]	1.5 / 3	1.5 / 3	1.5 / 3	2.2 / 4.3	3 / 5.8	3.9 / 7.4	4.8 / 9.3	5.9 / 11.4	7.1 / 13.6	8.4 / 16.1

NOTES

- Span loads are limited by shear, moment, or deflection limits of L/240 for live load and L/180 for total load. The beam's self weight is included.
- Snow load is considered to be 0.75 of the total load.
- Bearing lengths:
  - Bearing is required across the full width of the beam.
  - Bearing lengths shown are the minimum required at end and interior supports in inches.
  - Bearing lengths are based on the compressive strength, perpendicular-to-grain, of the beam material. Other bearing materials or design considerations may require longer bearing lengths.
- Table assumes:
  - Lateral support at each support and continuously along compression edges of the beam.
  - Load duration factor of 1.15.
  - Spans measured center-line to center-line of supports.
  - Maximum total length of 60'. Other sizes available, speak with your representative for assistance.
  - Unbalanced beams for simple and multiple spans, balanced beams can be calculated for multiple span conditions.
- For fire-resistent designs, use char rate calculation per the NDS. Contact Boise Cascade engineering for more information.
- Loads shown are intended for preliminary design purposes only. Analysis using appropriate software may result in higher allowable loads than shown.

Boise Cascade® ENGINEERED WOOD PRODUCTS

Roof - Snow Spans — 1.15 Load Duration [PLF]

Span	Span Type and Min. Bearing	10¾" (10.75") Width										
		Beam Depth										
		12" (12.00")	15" (15.00")	18" (18.00")	21" (21.00")	24" (24.00")	27" (27.00")	30" (30.00")	33" (33.00")	36" (36.00")	39" (39.00")	42" (42.00")
10'	Simple	4,716	7,215	10,211	13,694	17,410	21,373	26,130	31,946	33,446	33,438	33,430
	Multiple	3,628	5,553	7,860	10,137	12,271	14,672	16,692	16,684	16,676	16,668	16,660
	Min. End/Int. Brg [in]	3.4 / 6.5	5.2 / 10	7.3 / 14.1	9.8 / 18.2	12.5 / 22.1	15.3 / 26.4	18.8 / 30	22.9 / 30	24 / 30	24 / 30	24 / 30
12'	Simple	3,206	4,908	6,948	9,320	12,020	15,043	18,384	22,042	26,012	27,848	27,840
	Multiple	2,464	3,774	5,345	7,172	9,251	11,162	13,026	13,889	13,881	13,873	13,865
	Min. End/Int. Brg [in]	2.8 / 5.4	4.2 / 8.2	6 / 11.6	8.1 / 15.5	10.4 / 20	13 / 24.1	15.9 / 28.1	19 / 30	22.4 / 30	24 / 30	24 / 30
14'	Simple	2,311	3,540	5,013	6,728	8,679	10,863	13,278	15,922	18,792	21,887	23,847
	Multiple	1,774	2,720	3,854	5,173	6,675	8,357	10,218	11,892	11,885	11,877	11,869
	Min. End/Int. Brg [in]	2.3 / 4.5	3.6 / 6.9	5.1 / 9.8	6.8 / 13.1	8.8 / 16.9	11 / 21.1	13.4 / 25.8	16 / 30	18.9 / 30	22 / 30	24 / 30
16'	Simple	1,738	2,665	3,776	5,069	6,541	8,190	10,012	12,008	14,174	16,510	19,014
	Multiple	1,333	2,045	2,900	3,895	5,028	6,297	7,700	9,236	10,387	10,379	10,372
	Min. End/Int. Brg [in]	2 / 3.9	3.1 / 6	4.4 / 8.4	5.9 / 11.3	7.6 / 14.6	9.5 / 18.2	11.6 / 22.3	13.8 / 26.7	16.3 / 30	19 / 30	21.9 / 30
18'	Simple	1,350	2,072	2,938	3,946	5,094	6,379	7,801	9,358	11,047	12,870	14,823
	Multiple	1,034	1,588	2,254	3,029	3,912	4,901	5,995	7,193	8,494	9,215	9,207
	Min. End/Int. Brg [in]	1.8 / 3.4	2.7 / 5.2	3.8 / 7.4	5.2 / 9.9	6.6 / 12.8	8.3 / 16	10.1 / 19.6	12.2 / 23.4	14.4 / 27.7	16.7 / 30	19.2 / 30
20'	Simple	1,001	1,653	2,346	3,152	4,070	5,099	6,237	7,483	8,836	10,295	11,859
	Multiple	822	1,265	1,797	2,417	3,123	3,914	4,790	5,748	6,790	7,912	8,275
	Min. End/Int. Brg [in]	1.5 / 3.1	2.4 / 4.7	3.4 / 6.6	4.6 / 8.8	5.9 / 11.4	7.4 / 14.3	9 / 17.4	10.8 / 20.9	12.8 / 24.6	14.9 / 28.7	17.1 / 30
22'	Simple	744	1,346	1,912	2,570	3,321	4,161	5,092	6,110	7,216	8,409	9,688
	Multiple	667	1,029	1,463	1,969	2,545	3,192	3,907	4,690	5,541	6,459	7,443
	Min. End/Int. Brg [in]	1.5 / 3	2.2 / 4.2	3.1 / 5.9	4.1 / 8	5.3 / 10.3	6.7 / 12.8	8.1 / 15.7	9.8 / 18.8	11.5 / 22.2	13.4 / 25.8	15.4 / 29.7
24'	Simple	566	1,115	1,585	2,132	2,756	3,455	4,228	5,075	5,995	6,988	8,052
	Multiple	551	850	1,211	1,631	2,110	2,647	3,241	3,892	4,600	5,363	6,181
	Min. End/Int. Brg [in]	1.5 / 3	2 / 3.8	2.8 / 5.4	3.8 / 7.2	4.8 / 9.3	6.1 / 11.7	7.4 / 14.3	8.9 / 17.1	10.5 / 20.2	12.2 / 23.5	14 / 27
26'	Simple	438	878	1,332	1,794	2,320	2,909	3,562	4,277	5,053	5,891	6,789
	Multiple	461	713	1,016	1,370	1,774	2,226	2,728	3,277	3,874	4,517	5,208
	Min. End/Int. Brg [in]	1.5 / 3	1.7 / 3.5	2.6 / 4.9	3.4 / 6.6	4.4 / 8.5	5.5 / 10.7	6.8 / 13.1	8.1 / 15.6	9.6 / 18.5	11.1 / 21.5	12.8 / 24.7
28'	Simple	345	695	1,133	1,527	1,976	2,480	3,037	3,648	4,311	5,027	5,795
	Multiple	390	604	863	1,165	1,509	1,895	2,323	2,792	3,302	3,852	4,442
	Min. End/Int. Brg [in]	1.5 / 3	1.5 / 3.2	2.4 / 4.6	3.2 / 6.1	4.1 / 7.9	5.1 / 9.8	6.2 / 12	7.5 / 14.4	8.8 / 17	10.3 / 19.8	11.8 / 22.8
30'	Simple	274	558	974	1,314	1,701	2,136	2,617	3,144	3,717	4,335	4,998
	Multiple	333	518	740	1,000	1,297	1,630	1,999	2,404	2,844	3,318	3,828
	Min. End/Int. Brg [in]	1.5 / 3	1.5 / 3	2.2 / 4.2	2.9 / 5.7	3.8 / 7.3	4.7 / 9.1	5.8 / 11.2	6.9 / 13.4	8.2 / 15.8	9.5 / 18.4	11 / 21.1

NOTES

- Span loads are limited by shear, moment, or deflection limits of L/240 for live load and L/180 for total load. The beam's self weight is included.
- Snow load is considered to be 0.75 of the total load.
- Bearing lengths:
  - Bearing is required across the full width of the beam.
  - Bearing lengths shown are the minimum required at end and interior supports in inches.
  - Bearing lengths are based on the compressive strength, perpendicular-to-grain, of the beam material. Other bearing materials or design considerations may require longer bearing lengths.
- Table assumes:
  - Lateral support at each support and continuously along compression edges of the beam.
  - Load duration factor of 1.15.
  - Spans measured center-line to center-line of supports.
  - Maximum total length of 60'. Other sizes available, speak with your representative for assistance.
  - Unbalanced beams for simple and multiple spans, balanced beams can be calculated for multiple span conditions.
- For fire-resistent designs, use char rate calculation per the NDS. Contact Boise Cascade engineering for more information.
- Loads shown are intended for preliminary design purposes only. Analysis using appropriate software may result in higher allowable loads than shown.

Roof - Snow Spans — 1.15 Load Duration [PLF]

Span	Span Type and Min. Bearing	12¼" (12.25") Width										
		Beam Depth										
		12" (12.00")	15" (15.00")	18" (18.00")	21" (21.00")	24" (24.00")	27" (27.00")	30" (30.00")	33" (33.00")	36" (36.00")	39" (39.00")	42" (42.00")
10'	Simple	5,304	8,115	11,484	15,401	19,839	24,355	29,776	36,400	38,113	38,104	38,095
	Multiple	4,081	6,245	8,840	11,552	13,983	16,719	19,021	19,012	19,003	18,994	18,985
	Min. End/Int. Brg [in]	3.4 / 6.5	5.1 / 9.9	7.2 / 14	9.7 / 18.2	12.5 / 22.1	15.3 / 26.4	18.8 / 30	22.9 / 30	24 / 30	24 / 30	24 / 30
12'	Simple	3,606	5,519	7,814	10,482	13,519	16,918	20,676	24,790	29,255	31,734	31,725
	Multiple	2,771	4,244	6,011	8,066	10,404	12,719	14,843	15,827	15,818	15,809	15,800
	Min. End/Int. Brg [in]	2.7 / 5.3	4.2 / 8.1	5.9 / 11.4	7.9 / 15.3	10.2 / 19.7	12.8 / 24.1	15.6 / 28.1	18.8 / 30	22.1 / 30	24 / 30	24 / 30
14'	Simple	2,599	3,981	5,638	7,566	9,760	12,217	14,934	17,907	21,135	24,615	27,175
	Multiple	1,995	3,058	4,334	5,818	7,507	9,399	11,491	13,552	13,543	13,534	13,525
	Min. End/Int. Brg [in]	2.3 / 4.5	3.5 / 6.8	5 / 9.6	6.7 / 12.9	8.6 / 16.7	10.8 / 20.8	13.2 / 25.5	15.8 / 30	18.7 / 30	21.7 / 30	24 / 30
16'	Simple	1,954	2,996	4,246	5,701	7,356	9,210	11,260	13,504	15,941	18,568	21,384
	Multiple	1,498	2,299	3,261	4,380	5,654	7,081	8,659	10,387	11,837	11,828	11,819
	Min. End/Int. Brg [in]	2 / 3.9	3.1 / 5.9	4.3 / 8.3	5.8 / 11.2	7.5 / 14.4	9.3 / 18	11.4 / 22	13.7 / 26.3	16.1 / 30	18.8 / 30	21.6 / 30
18'	Simple	1,518	2,330	3,304	4,438	5,729	7,174	8,773	10,524	12,424	14,474	16,671
	Multiple	1,162	1,786	2,535	3,406	4,399	5,512	6,742	8,089	9,552	10,501	10,492
	Min. End/Int. Brg [in]	1.8 / 3.4	2.7 / 5.2	3.8 / 7.3	5.1 / 9.8	6.6 / 12.6	8.2 / 15.8	10 / 19.3	12 / 23.1	14.2 / 27.3	16.5 / 30	19 / 30
20'	Simple	1,140	1,859	2,638	3,545	4,577	5,734	7,014	8,415	9,937	11,578	13,337
	Multiple	924	1,422	2,021	2,718	3,512	4,402	5,386	6,464	7,635	8,898	9,430
	Min. End/Int. Brg [in]	1.5 / 3	2.4 / 4.6	3.4 / 6.5	4.5 / 8.7	5.8 / 11.3	7.3 / 14.1	8.9 / 17.2	10.7 / 20.6	12.6 / 24.3	14.7 / 28.3	16.9 / 30
22'	Simple	848	1,513	2,149	2,890	3,734	4,680	5,726	6,871	8,115	9,457	10,895
	Multiple	750	1,156	1,645	2,214	2,862	3,589	4,393	5,274	6,231	7,263	8,370
	Min. End/Int. Brg [in]	1.5 / 3	2.2 / 4.1	3 / 5.9	4.1 / 7.9	5.3 / 10.1	6.6 / 12.7	8 / 15.5	9.6 / 18.6	11.4 / 21.9	13.2 / 25.5	15.2 / 29.3
24'	Simple	645	1,253	1,782	2,397	3,099	3,885	4,754	5,707	6,742	7,858	9,055
	Multiple	619	956	1,361	1,833	2,372	2,976	3,644	4,377	5,172	6,031	6,951
	Min. End/Int. Brg [in]	1.5 / 3	2 / 3.8	2.8 / 5.3	3.7 / 7.1	4.8 / 9.2	6 / 11.5	7.3 / 14.1	8.7 / 16.9	10.3 / 19.9	12 / 23.2	13.8 / 26.7
26'	Simple	500	1,001	1,498	2,017	2,608	3,271	4,005	4,809	5,682	6,624	7,634
	Multiple	518	801	1,142	1,540	1,994	2,503	3,067	3,684	4,355	5,080	5,856
	Min. End/Int. Brg [in]	1.5 / 3	1.7 / 3.5	2.5 / 4.9	3.4 / 6.5	4.4 / 8.4	5.5 / 10.5	6.7 / 12.9	8 / 15.4	9.5 / 18.2	11 / 21.2	12.7 / 24.4
28'	Simple	393	792	1,274	1,717	2,222	2,788	3,415	4,102	4,848	5,653	6,516
	Multiple	438	679	970	1,309	1,696	2,131	2,612	3,139	3,712	4,331	4,994
	Min. End/Int. Brg [in]	1.5 / 3	1.5 / 3.2	2.3 / 4.5	3.1 / 6	4 / 7.8	5 / 9.7	6.2 / 11.9	7.4 / 14.2	8.7 / 16.8	10.1 / 19.5	11.7 / 22.5
30'	Simple	313	636	1,095	1,477	1,913	2,401	2,942	3,535	4,179	4,875	5,620
	Multiple	374	581	832	1,124	1,458	1,833	2,248	2,703	3,197	3,731	4,304
	Min. End/Int. Brg [in]	1.5 / 3	1.5 / 3	2.2 / 4.2	2.9 / 5.6	3.7 / 7.2	4.7 / 9	5.7 / 11	6.8 / 13.2	8.1 / 15.6	9.4 / 18.1	10.8 / 20.9

NOTES

- Span loads are limited by shear, moment, or deflection limits of L/240 for live load and L/180 for total load. The beam's self weight is included.
- Snow load is considered to be 0.75 of the total load.
- Bearing lengths:
  - Bearing is required across the full width of the beam.
  - Bearing lengths shown are the minimum required at end and interior supports in inches.
  - Bearing lengths are based on the compressive strength, perpendicular-to-grain, of the beam material. Other bearing materials or design considerations may require longer bearing lengths.
- Table assumes:
  - Lateral support at each support and continuously along compression edges of the beam.
  - Load duration factor of 1.15.
  - Spans measured center-line to center-line of supports.
  - Maximum total length of 60'. Other sizes available, speak with your representative for assistance.
  - Unbalanced beams for simple and multiple spans, balanced beams can be calculated for multiple span conditions.
- For fire-resistent designs, use char rate calculation per the NDS. Contact Boise Cascade engineering for more information.
- Loads shown are intended for preliminary design purposes only. Analysis using appropriate software may result in higher allowable loads than shown.

Boise Cascade® ENGINEERED WOOD PRODUCTS

Roof - Snow Spans — 1.15 Load Duration [PLF]

Span	Span Type and Min. Bearing	14¼" (14.25") Width									
		Beam Depth									
		15" (15.00")	18" (18.00")	21" (21.00")	24" (24.00")	27" (27.00")	30" (30.00")	33" (33.00")	36" (36.00")	39" (39.00")	42" (42.00")
10'	Simple	9,297	13,158	17,646	22,752	28,331	34,638	41,706	44,335	44,325	44,315
	Multiple	7,155	10,128	13,438	16,266	19,449	22,126	22,116	22,105	22,095	22,085
	Min. End/Int. Brg [in]	5 / 9.7	7.1 / 13.8	9.6 / 18.2	12.3 / 22.1	15.3 / 26.4	18.8 / 30	22.6 / 30	24 / 30	24 / 30	24 / 30
12'	Simple	6,323	8,952	12,009	15,488	19,383	23,690	28,403	33,519	36,915	36,905
	Multiple	4,862	6,886	9,241	11,920	14,796	17,267	18,411	18,400	18,390	18,380
	Min. End/Int. Brg [in]	4.1 / 8	5.8 / 11.3	7.8 / 15.1	10.1 / 19.4	12.6 / 24.1	15.4 / 28.1	18.5 / 30	21.8 / 30	24 / 30	24 / 30
14'	Simple	4,560	6,459	8,668	11,182	13,997	17,110	20,517	24,215	28,203	31,612
	Multiple	3,503	4,965	6,665	8,601	10,768	13,165	15,764	15,754	15,743	15,733
	Min. End/Int. Brg [in]	3.5 / 6.7	4.9 / 9.5	6.6 / 12.7	8.5 / 16.4	10.6 / 20.5	13 / 25.1	15.6 / 30	18.4 / 30	21.4 / 30	24 / 30
16'	Simple	3,432	4,865	6,531	8,427	10,552	12,900	15,472	18,263	21,273	24,500
	Multiple	2,634	3,735	5,017	6,477	8,112	9,920	11,900	13,769	13,759	13,748
	Min. End/Int. Brg [in]	3 / 5.8	4.3 / 8.2	5.7 / 11	7.4 / 14.2	9.2 / 17.7	11.2 / 21.6	13.5 / 25.9	15.9 / 30	18.5 / 30	21.3 / 30
18'	Simple	2,669	3,785	5,084	6,563	8,219	10,051	12,056	14,234	16,582	19,099
	Multiple	2,045	2,903	3,902	5,040	6,314	7,724	9,267	10,943	12,215	12,205
	Min. End/Int. Brg [in]	2.6 / 5.1	3.7 / 7.2	5 / 9.7	6.5 / 12.4	8.1 / 15.6	9.9 / 19	11.8 / 22.8	14 / 26.9	16.2 / 30	18.7 / 30
20'	Simple	2,129	3,021	4,060	5,243	6,569	8,035	9,641	11,384	13,264	15,279
	Multiple	1,629	2,315	3,113	4,023	5,042	6,170	7,405	8,746	10,193	10,970
	Min. End/Int. Brg [in]	2.4 / 4.5	3.3 / 6.4	4.5 / 8.6	5.8 / 11.1	7.2 / 13.9	8.8 / 16.9	10.5 / 20.3	12.4 / 23.9	14.5 / 27.9	16.7 / 30
22'	Simple	1,733	2,462	3,311	4,277	5,360	6,559	7,871	9,296	10,833	12,481
	Multiple	1,324	1,883	2,535	3,278	4,111	5,032	6,041	7,137	8,320	9,588
	Min. End/Int. Brg [in]	2.1 / 4.1	3 / 5.8	4 / 7.7	5.2 / 10	6.5 / 12.5	7.9 / 15.2	9.5 / 18.3	11.2 / 21.6	13 / 25.1	15 / 28.9
24'	Simple	1,435	2,040	2,746	3,549	4,450	5,446	6,538	7,723	9,002	10,373
	Multiple	1,094	1,559	2,100	2,717	3,408	4,174	5,013	5,925	6,908	7,962
	Min. End/Int. Brg [in]	1.9 / 3.7	2.7 / 5.2	3.7 / 7	4.7 / 9.1	5.9 / 11.3	7.2 / 13.9	8.6 / 16.6	10.2 / 19.6	11.8 / 22.8	13.6 / 26.3
26'	Simple	1,164	1,715	2,309	2,987	3,747	4,587	5,508	6,509	7,588	8,745
	Multiple	917	1,308	1,764	2,283	2,867	3,512	4,220	4,989	5,818	6,708
	Min. End/Int. Brg [in]	1.7 / 3.4	2.5 / 4.8	3.3 / 6.4	4.3 / 8.3	5.4 / 10.4	6.6 / 12.7	7.9 / 15.2	9.3 / 17.9	10.8 / 20.9	12.5 / 24
28'	Simple	922	1,459	1,966	2,545	3,193	3,911	4,698	5,553	6,475	7,464
	Multiple	777	1,110	1,499	1,942	2,440	2,991	3,595	4,252	4,960	5,720
	Min. End/Int. Brg [in]	1.5 / 3.1	2.3 / 4.4	3.1 / 5.9	4 / 7.7	5 / 9.6	6.1 / 11.7	7.3 / 14	8.6 / 16.5	10 / 19.3	11.5 / 22.2
30'	Simple	740	1,254	1,691	2,190	2,750	3,370	4,049	4,787	5,583	6,438
	Multiple	665	952	1,287	1,669	2,098	2,574	3,095	3,661	4,273	4,929
	Min. End/Int. Brg [in]	1.5 / 3	2.1 / 4.1	2.9 / 5.5	3.7 / 7.1	4.6 / 8.9	5.6 / 10.8	6.7 / 13	8 / 15.3	9.3 / 17.8	10.7 / 20.5

NOTES

- Span loads are limited by shear, moment, or deflection limits of L/240 for live load and L/180 for total load. The beam's self weight is included.
- Snow load is considered to be 0.75 of the total load.
- Bearing lengths:
  - Bearing is required across the full width of the beam.
  - Bearing lengths shown are the minimum required at end and interior supports in inches.
  - Bearing lengths are based on the compressive strength, perpendicular-to-grain, of the beam material. Other bearing materials or design considerations may require longer bearing lengths.
- Table assumes:
  - Lateral support at each support and continuously along compression edges of the beam.
  - Load duration factor of 1.15.
  - Spans measured center-line to center-line of supports.
  - Maximum total length of 60'. Other sizes available, speak with your representative for assistance.
  - Unbalanced beams for simple and multiple spans, balanced beams can be calculated for multiple span conditions.
- For fire-resistent designs, use char rate calculation per the NDS. Contact Boise Cascade engineering for more information.
- Loads shown are intended for preliminary design purposes only. Analysis using appropriate software may result in higher allowable loads than shown.

Roof - Non-Snow Spans — 1.25 Load Duration [PLF]

Span	Span Type and Min. Bearing	3⅛" (3.125") Width							5⅛" (5.125") Width						
		Beam Depth							Beam Depth						
		6" (6.00")	9" (9.00")	12" (12.00")	15" (15.00")	18" (18.00")	21" (21.00")	24" (24.00")	6" (6.00")	9" (9.00")	12" (12.00")	15" (15.00")	18" (18.00")	21" (21.00")	24" (24.00")
10'	Simple	295	837	1,491	2,332	3,361	4,443	5,503	485	1,373	2,445	3,825	5,513	7,287	9,024
	Multiple	285	644	1,147	1,795	2,588	3,205	3,879	467	1,055	1,881	2,944	4,244	5,255	6,361
	Min. End/Int. Brg [in]	1.5 / 3	2.1 / 4	3.7 / 7.1	5.8 / 11.1	8.3 / 16	11 / 19.8	13.6 / 24	1.5 / 3	2.1 / 4	3.7 / 7.1	5.8 / 11.1	8.3 / 16	11 / 19.8	13.6 / 24
12'	Simple	169	579	1,033	1,616	2,330	3,174	4,122	277	950	1,693	2,651	3,821	5,206	6,713
	Multiple	196	445	794	1,243	1,793	2,443	2,993	322	730	1,302	2,039	2,940	4,007	4,909
	Min. End/Int. Brg [in]	1.5 / 3	1.7 / 3.3	3.1 / 5.9	4.8 / 9.3	6.9 / 13.3	9.4 / 18.2	12.2 / 22.2	1.5 / 3	1.7 / 3.3	3.1 / 5.9	4.8 / 9.3	6.9 / 13.3	9.4 / 18.2	12.1 / 22.2
14'	Simple	105	362	756	1,184	1,708	2,328	3,043	172	594	1,240	1,942	2,802	3,759	4,848
	Multiple	143	325	581	910	1,314	1,791	2,341	234	533	953	1,493	2,154	2,891	3,730
	Min. End/Int. Brg [in]	1.5 / 3	1.5 / 3	2.6 / 5.1	4.1 / 7.9	5.9 / 11.4	8.1 / 15.6	10.5 / 20.3	1.5 / 3	1.5 / 3	2.6 / 5.1	4.1 / 7.9	5.9 / 11.4	8 / 15.3	10.3 / 19.8
16'	Simple	69	240	577	904	1,305	1,778	2,326	113	394	946	1,483	2,111	2,833	3,655
	Multiple	105	247	443	694	1,003	1,367	1,788	172	405	726	1,139	1,622	2,178	2,811
	Min. End/Int. Brg [in]	1.5 / 3	1.5 / 3	2.3 / 4.4	3.6 / 6.9	5.2 / 10	7.1 / 13.6	9.2 / 17.8	1.5 / 3	1.5 / 3	2.3 / 4.4	3.6 / 6.9	5.1 / 9.9	6.9 / 13.2	8.9 / 17.1
18'	Simple		167	402	712	1,028	1,402	1,825	77	274	660	1,160	1,644	2,207	2,848
	Multiple		194	348	546	789	1,077	1,403	119	318	570	889	1,262	1,695	2,188
	Min. End/Int. Brg [in]		1.5 / 3	1.8 / 4	3.2 / 6.2	4.6 / 8.9	6.3 / 12.1	8.2 / 15.7	1.5 / 3	1.5 / 3	1.8 / 4	3.2 / 6.1	4.5 / 8.7	6 / 11.6	7.8 / 15
20'	Simple		120	291	575	830	1,131	1,459	54	196	477	926	1,313	1,763	2,277
	Multiple		156	280	440	637	868	1,121	85	255	459	709	1,007	1,353	1,748
	Min. End/Int. Brg [in]		1.5 / 3	1.5 / 3.6	2.9 / 5.6	4.2 / 8	5.6 / 10.9	7.3 / 14	1.5 / 3	1.5 / 3	1.5 / 3.6	2.8 / 5.5	4 / 7.7	5.4 / 10.4	6.9 / 13.3
22'	Simple		88	216	429	684	923	1,191		145	355	703	1,071	1,439	1,858
	Multiple		128	230	362	524	708	914		209	375	577	820	1,103	1,426
	Min. End/Int. Brg [in]		1.5 / 3	1.5 / 3.2	2.4 / 5.1	3.8 / 7.3	5.1 / 9.8	6.6 / 12.6		1.5 / 3	1.5 / 3.2	2.4 / 4.9	3.6 / 7	4.8 / 9.3	6.2 / 12
24'	Simple		66	164	328	570	766	989		109	270	537	888	1,194	1,543
	Multiple		103	192	302	436	587	759		169	310	478	679	915	1,182
	Min. End/Int. Brg [in]		1.5 / 3	1.5 / 3	2 / 4.6	3.4 / 6.6	4.6 / 8.9	6 / 11.5		1.5 / 3	1.5 / 3	2 / 4.5	3.3 / 6.3	4.4 / 8.5	5.7 / 10.9
26'	Simple		51	127	255	447	645	834		83	209	419	733	1,005	1,300
	Multiple		79	162	256	366	493	638		130	260	401	571	769	995
	Min. End/Int. Brg [in]		1.5 / 3	1.5 / 3	1.7 / 4.3	2.9 / 6.1	4.2 / 8.2	5.5 / 10.5		1.5 / 3	1.5 / 3	1.7 / 4.1	2.9 / 5.8	4 / 7.8	5.2 / 10
28'	Simple			100	202	355	550	711		64	164	332	583	857	1,108
	Multiple			138	219	312	420	544		102	220	340	485	654	847
	Min. End/Int. Brg [in]			1.5 / 3	1.5 / 4	2.5 / 5.6	3.9 / 7.5	5 / 9.7		1.5 / 3	1.5 / 3	1.5 / 3.8	2.5 / 5.3	3.7 / 7.2	4.8 / 9.2
30'	Simple			80	162	286	460	612		50	131	266	470	738	954
	Multiple			119	188	268	361	468		81	188	292	417	563	729
	Min. End/Int. Brg [in]			1.5 / 3	1.5 / 3.7	2.2 / 5.2	3.5 / 7	4.7 / 9		1.5 / 3	1.5 / 3	1.5 / 3.5	2.2 / 4.9	3.4 / 6.6	4.4 / 8.5

NOTES

- Span loads are limited by shear, moment, or deflection limits of L/240 for live load and L/180 for total load, The beam's self weight is included.
- Live load is considered to be 0.6 of the total load.
- Bearing lengths
  - Bearing is required across the full width of the beam.
  - Bearing lengths shown are the minimum required at end and interior supports in inches.
  - Bearing lengths are based on the compressive strength, perpendicular-to-grain, of the beam material. Other bearing materials or design considerations may require longer bearing lengths.
- Table assumes:
  - Lateral support at each support and continuously along compression edges of the beam.
  - Load duration factor of 1.25.
  - Spans measured center-line to center-line of supports.
  - Maximum total length of 60'. Other sizes available, speak with your representative for assistance.
  - Unbalanced beams for simple and multiple spans, balanced beams can be calculated for multiple span conditions.
- For fire-resistent designs, use char rate calculation per the NDS. Contact Boise Cascade engineering for more information.
- Loads shown are intended for preliminary design purposes only. Analysis using appropriate software may result in higher allowable loads than shown.

Boise Cascade® ENGINEERED WOOD PRODUCTS

Roof - Non-Snow Spans — 1.25 Load Duration [PLF]

Span	Span Type and Min. Bearing	6¾" (6.75") Width							
		Beam Depth							
		9" (9.00")	12" (12.00")	15" (15.00")	18" (18.00")	21" (21.00")	24" (24.00")	27" (27.00")	30" (30.00")
10'	Simple	1,808	3,220	5,038	7,260	9,597	11,886	14,591	17,838
	Multiple	1,390	2,478	3,878	5,590	6,922	8,378	10,017	10,481
	Min. End/Int. Brg [in]	2.1 / 4	3.7 / 7.1	5.8 / 11.1	8.3 / 16	11 / 19.8	13.6 / 24	16.7 / 28.7	20.4 / 30
12'	Simple	1,251	2,230	3,491	4,972	6,669	8,600	10,688	12,728
	Multiple	961	1,715	2,685	3,826	5,133	6,465	7,622	8,726
	Min. End/Int. Brg [in]	1.7 / 3.3	3.1 / 5.9	4.8 / 9.3	6.8 / 13.2	9.2 / 17.7	11.8 / 22.2	14.7 / 26.2	17.5 / 30
14'	Simple	782	1,633	2,534	3,589	4,815	6,211	7,773	9,501
	Multiple	702	1,255	1,948	2,760	3,704	4,778	5,982	7,106
	Min. End/Int. Brg [in]	1.5 / 3	2.6 / 5.1	4.1 / 7.9	5.8 / 11.1	7.7 / 14.9	10 / 19.2	12.5 / 24	15.2 / 28.5
16'	Simple	519	1,245	1,909	2,704	3,629	4,682	5,862	7,166
	Multiple	534	956	1,466	2,078	2,790	3,600	4,508	5,512
	Min. End/Int. Brg [in]	1.5 / 3	2.3 / 4.4	3.5 / 6.8	5 / 9.6	6.7 / 12.9	8.6 / 16.6	10.8 / 20.8	13.2 / 25.4
18'	Simple	360	869	1,485	2,105	2,826	3,648	4,568	5,585
	Multiple	419	742	1,139	1,616	2,171	2,803	3,511	4,294
	Min. End/Int. Brg [in]	1.5 / 3	1.8 / 3.9	3.1 / 6	4.4 / 8.4	5.9 / 11.3	7.6 / 14.6	9.5 / 18.2	11.6 / 22.3
20'	Simple	259	628	1,185	1,681	2,259	2,916	3,652	4,467
	Multiple	336	591	908	1,289	1,733	2,239	2,805	3,432
	Min. End/Int. Brg [in]	1.5 / 3	1.5 / 3.5	2.8 / 5.3	3.9 / 7.5	5.2 / 10.1	6.7 / 13	8.4 / 16.2	10.3 / 19.8
22'	Simple	191	467	926	1,371	1,843	2,380	2,982	3,647
	Multiple	274	480	739	1,050	1,412	1,825	2,288	2,800
	Min. End/Int. Brg [in]	1.5 / 3	1.5 / 3.1	2.4 / 4.8	3.5 / 6.8	4.7 / 9.1	6.1 / 11.7	7.6 / 14.6	9.3 / 17.9
24'	Simple	143	355	708	1,137	1,529	1,976	2,476	3,030
	Multiple	222	397	611	870	1,171	1,514	1,899	2,324
	Min. End/Int. Brg [in]	1.5 / 3	1.5 / 3	2 / 4.3	3.2 / 6.1	4.3 / 8.2	5.5 / 10.6	6.9 / 13.3	8.4 / 16.2
26'	Simple	110	275	551	957	1,287	1,664	2,086	2,554
	Multiple	171	332	513	731	984	1,274	1,598	1,957
	Min. End/Int. Brg [in]	1.5 / 3	1.5 / 3	1.7 / 4	2.9 / 5.6	3.9 / 7.5	5 / 9.7	6.3 / 12.2	7.7 / 14.9
28'	Simple	85	216	437	767	1,097	1,419	1,779	2,178
	Multiple	134	281	436	621	838	1,084	1,361	1,668
	Min. End/Int. Brg [in]	1.5 / 3	1.5 / 3	1.5 / 3.7	2.5 / 5.2	3.6 / 7	4.7 / 9	5.8 / 11.2	7.1 / 13.7
30'	Simple	66	172	350	618	944	1,222	1,533	1,878
	Multiple	106	241	373	533	720	933	1,172	1,436
	Min. End/Int. Brg [in]	1.5 / 3	1.5 / 3	1.5 / 3.4	2.2 / 4.8	3.3 / 6.4	4.3 / 8.3	5.4 / 10.4	6.6 / 12.7

NOTES

- Span loads are limited by shear, moment, or deflection limits of L/240 for live load and L/180 for total load. The beam's self weight is included.
- Live load is considered to be 0.6 of the total load.
- Bearing lengths:
  - Bearing is required across the full width of the beam.
  - Bearing lengths shown are the minimum required at end and interior supports in inches.
  - Bearing lengths are based on the compressive strength, perpendicular-to-grain, of the beam material. Other bearing materials or design considerations may require longer bearing lengths.
- Table assumes:
  - Lateral support at each support and continuously along compression edges of the beam.
  - Load duration factor of 1.25.
  - Spans measured center-line to center-line of supports.
  - Maximum total length of 60'. Other sizes available, speak with your representative for assistance.
  - Unbalanced beams for simple and multiple spans, balanced beams can be calculated for multiple span conditions.
- For fire-resistent designs, use char rate calculation per the NDS. Contact Boise Cascade engineering for more information.
- Loads shown are intended for preliminary design purposes only. Analysis using appropriate software may result in higher allowable loads than shown.

Roof - Non-Snow Spans — 1.25 Load Duration [PLF]

Span	Span Type and Min. Bearing	8¾" (8.75") Width									
		Beam Depth									
		9" (9.00")	12" (12.00")	15" (15.00")	18" (18.00")	21" (21.00")	24" (24.00")	27" (27.00")	30" (30.00")	33" (33.00")	36" (36.00")
10'	Simple	2,343	4,174	6,520	9,226	12,372	15,407	18,914	23,124	27,230	27,223
	Multiple	1,802	3,212	5,019	7,103	8,973	10,861	12,986	13,586	13,580	13,573
	Min. End/Int. Brg [in]	2.1 / 4	3.7 / 7.1	5.8 / 11.1	8.1 / 15.7	10.9 / 19.8	13.6 / 24	16.7 / 28.7	20.4 / 30	24 / 30	24 / 30
12'	Simple	1,621	2,891	4,436	6,279	8,422	10,861	13,592	16,499	19,550	22,673
	Multiple	1,246	2,223	3,412	4,831	6,482	8,361	9,880	11,311	11,305	11,298
	Min. End/Int. Brg [in]	1.7 / 3.3	3.1 / 5.9	4.7 / 9.1	6.7 / 12.8	8.9 / 17.2	11.5 / 22.2	14.4 / 26.2	17.5 / 30	20.7 / 30	24 / 30
14'	Simple	1,014	2,090	3,200	4,532	6,081	7,844	9,817	11,999	14,388	16,980
	Multiple	910	1,605	2,460	3,485	4,677	6,034	7,554	9,211	9,680	9,673
	Min. End/Int. Brg [in]	1.5 / 3	2.6 / 5	4 / 7.7	5.6 / 10.8	7.5 / 14.5	9.7 / 18.7	12.2 / 23.4	14.8 / 28.5	17.8 / 30	21 / 30
16'	Simple	673	1,573	2,410	3,414	4,583	5,913	7,403	9,049	10,852	12,809
	Multiple	692	1,206	1,850	2,623	3,522	4,546	5,693	6,961	8,349	8,455
	Min. End/Int. Brg [in]	1.5 / 3	2.2 / 4.3	3.4 / 6.6	4.9 / 9.4	6.5 / 12.5	8.4 / 16.2	10.5 / 20.2	12.8 / 24.7	15.4 / 29.6	18.1 / 30
18'	Simple	467	1,127	1,875	2,658	3,569	4,606	5,768	7,052	8,459	9,986
	Multiple	538	936	1,438	2,040	2,741	3,539	4,433	5,422	6,504	7,507
	Min. End/Int. Brg [in]	1.5 / 3	1.8 / 3.8	3 / 5.8	4.3 / 8.2	5.7 / 11	7.4 / 14.2	9.2 / 17.8	11.3 / 21.7	13.5 / 26	15.9 / 30
20'	Simple	335	814	1,496	2,123	2,852	3,682	4,612	5,640	6,766	7,988
	Multiple	427	745	1,146	1,627	2,188	2,826	3,542	4,333	5,199	6,140
	Min. End/Int. Brg [in]	1.5 / 3	1.5 / 3.4	2.7 / 5.2	3.8 / 7.3	5.1 / 9.8	6.6 / 12.6	8.2 / 15.8	10 / 19.3	12 / 23.2	14.2 / 27.3
22'	Simple	247	606	1,201	1,731	2,326	3,005	3,765	4,605	5,526	6,526
	Multiple	346	606	932	1,325	1,783	2,304	2,889	3,535	4,243	5,013
	Min. End/Int. Brg [in]	1.5 / 3	1.5 / 3.1	2.4 / 4.7	3.4 / 6.6	4.6 / 8.8	5.9 / 11.4	7.4 / 14.2	9 / 17.4	10.8 / 20.9	12.8 / 24.6
24'	Simple	186	461	918	1,435	1,930	2,494	3,126	3,826	4,591	5,423
	Multiple	285	500	771	1,098	1,478	1,911	2,397	2,934	3,523	4,163
	Min. End/Int. Brg [in]	1.5 / 3	1.5 / 3	2 / 4.2	3.1 / 6	4.2 / 8	5.4 / 10.3	6.7 / 12.9	8.2 / 15.8	9.8 / 19	11.6 / 22.4
26'	Simple	142	357	715	1,207	1,625	2,101	2,634	3,224	3,870	4,572
	Multiple	222	419	647	922	1,242	1,607	2,017	2,470	2,967	3,507
	Min. End/Int. Brg [in]	1.5 / 3	1.5 / 3	1.7 / 3.9	2.8 / 5.5	3.8 / 7.4	4.9 / 9.5	6.2 / 11.9	7.5 / 14.5	9 / 17.4	10.6 / 20.5
28'	Simple	110	281	566	995	1,384	1,790	2,246	2,750	3,302	3,902
	Multiple	174	355	549	783	1,057	1,368	1,718	2,105	2,529	2,990
	Min. End/Int. Brg [in]	1.5 / 3	1.5 / 3	1.5 / 3.6	2.5 / 5.1	3.5 / 6.8	4.5 / 8.7	5.7 / 10.9	6.9 / 13.3	8.3 / 16	9.8 / 18.9
30'	Simple	86	223	454	802	1,191	1,542	1,935	2,370	2,847	3,365
	Multiple	138	304	471	673	908	1,177	1,479	1,813	2,179	2,577
	Min. End/Int. Brg [in]	1.5 / 3	1.5 / 3	1.5 / 3.3	2.2 / 4.7	3.3 / 6.3	4.2 / 8.1	5.3 / 10.1	6.4 / 12.4	7.7 / 14.8	9.1 / 17.5

NOTES

- Span loads are limited by shear, moment, or deflection limits of L/240 for live load and L/180 for total load. The beam's self weight is included.
- Live load is considered to be 0.6 of the total load.
- Bearing lengths:
  - Bearing is required across the full width of the beam.
  - Bearing lengths shown are the minimum required at end and interior supports in inches.
  - Bearing lengths are based on the compressive strength, perpendicular-to-grain, of the beam material. Other bearing materials or design considerations may require longer bearing lengths.
- Table assumes:
  - Lateral support at each support and continuously along compression edges of the beam.
  - Load duration factor of 1.25.
  - Spans measured center-line to center-line of supports.
  - Maximum total length of 60'. Other sizes available, speak with your representative for assistance.
  - Unbalanced beams for simple and multiple spans, balanced beams can be calculated for multiple span conditions.
- For fire-resistent designs, use char rate calculation per the NDS. Contact Boise Cascade engineering for more information.
- Loads shown are intended for preliminary design purposes only. Analysis using appropriate software may result in higher allowable loads than shown.

Boise Cascade® ENGINEERED WOOD PRODUCTS

Roof - Non-Snow Spans — 1.25 Load Duration [PLF]

Span	Span Type and Min. Bearing	10¾" (10.75") Width										
		Beam Depth										
		12" (12.00")	15" (15.00")	18" (18.00")	21" (21.00")	24" (24.00")	27" (27.00")	30" (30.00")	33" (33.00")	36" (36.00")	39" (39.00")	42" (42.00")
10'	Simple	5,129	7,846	11,103	14,889	18,929	23,237	28,409	33,454	33,446	33,438	33,430
	Multiple	3,946	6,039	8,548	11,024	13,343	15,954	16,692	16,684	16,676	16,668	16,660
	Min. End/Int. Brg [in]	3.7 / 7.1	5.6 / 10.9	8 / 15.4	10.7 / 19.8	13.6 / 24	16.7 / 28.7	20.4 / 30	24 / 30	24 / 30	24 / 30	24 / 30
12'	Simple	3,488	5,338	7,556	10,136	13,071	16,357	19,990	23,966	27,856	27,848	27,840
	Multiple	2,681	4,106	5,814	7,800	10,061	12,138	13,897	13,889	13,881	13,873	13,865
	Min. End/Int. Brg [in]	3 / 5.8	4.6 / 8.9	6.5 / 12.6	8.8 / 16.9	11.3 / 21.7	14.1 / 26.2	17.2 / 30	20.7 / 30	24 / 30	24 / 30	24 / 30
14'	Simple	2,514	3,851	5,454	7,317	9,439	11,814	14,440	17,314	20,435	23,799	23,847
	Multiple	1,931	2,959	4,193	5,628	7,261	9,090	11,113	11,892	11,885	11,877	11,869
	Min. End/Int. Brg [in]	2.6 / 4.9	3.9 / 7.5	5.5 / 10.6	7.4 / 14.2	9.5 / 18.3	11.9 / 22.9	14.5 / 28	17.4 / 30	20.6 / 30	23.9 / 30	24 / 30
16'	Simple	1,892	2,900	4,108	5,515	7,115	8,908	10,890	13,059	15,415	17,954	20,677
	Multiple	1,451	2,226	3,156	4,238	5,470	6,850	8,376	10,047	10,387	10,379	10,372
	Min. End/Int. Brg [in]	2.2 / 4.2	3.4 / 6.5	4.8 / 9.2	6.4 / 12.3	8.2 / 15.8	10.3 / 19.8	12.6 / 24.2	15.1 / 29	17.8 / 30	20.7 / 30	23.8 / 30
18'	Simple	1,384	2,256	3,198	4,294	5,542	6,940	8,486	10,179	12,016	13,998	16,122
	Multiple	1,126	1,730	2,454	3,298	4,258	5,334	6,524	7,826	9,223	9,215	9,207
	Min. End/Int. Brg [in]	1.8 / 3.7	3 / 5.7	4.2 / 8.1	5.6 / 10.8	7.2 / 13.9	9 / 17.4	11 / 21.3	13.2 / 25.5	15.6 / 30	18.2 / 30	20.9 / 30
20'	Simple	1,001	1,800	2,554	3,431	4,430	5,549	6,786	8,141	9,613	11,199	12,900
	Multiple	897	1,379	1,958	2,632	3,400	4,261	5,213	6,256	7,388	8,283	8,275
	Min. End/Int. Brg [in]	1.5 / 3.3	2.6 / 5.1	3.7 / 7.2	5 / 9.6	6.4 / 12.4	8 / 15.5	9.8 / 18.9	11.8 / 22.7	13.9 / 26.8	16.2 / 30	18.6 / 30
22'	Simple	744	1,467	2,082	2,799	3,615	4,529	5,541	6,649	7,852	9,149	10,540
	Multiple	728	1,121	1,594	2,145	2,772	3,475	4,253	5,105	6,031	7,029	7,513
	Min. End/Int. Brg [in]	1.5 / 3	2.4 / 4.6	3.4 / 6.5	4.5 / 8.7	5.8 / 11.2	7.2 / 14	8.8 / 17	10.6 / 20.4	12.5 / 24.1	14.6 / 28.1	16.8 / 30
24'	Simple	566	1,127	1,726	2,322	3,001	3,761	4,603	5,524	6,525	7,604	8,762
	Multiple	601	928	1,320	1,777	2,299	2,883	3,530	4,238	5,008	5,838	6,729
	Min. End/Int. Brg [in]	1.5 / 3	2 / 4.2	3 / 5.9	4.1 / 7.9	5.3 / 10.1	6.6 / 12.7	8 / 15.5	9.6 / 18.6	11.4 / 21.9	13.2 / 25.5	15.2 / 29.4
26'	Simple	438	878	1,452	1,954	2,527	3,168	3,878	4,656	5,501	6,412	7,389
	Multiple	503	778	1,109	1,494	1,933	2,426	2,972	3,569	4,219	4,919	5,671
	Min. End/Int. Brg [in]	1.5 / 3	1.7 / 3.8	2.8 / 5.4	3.7 / 7.2	4.8 / 9.3	6 / 11.6	7.4 / 14.2	8.8 / 17	10.4 / 20.1	12.1 / 23.4	14 / 26.9
28'	Simple	345	695	1,222	1,665	2,154	2,702	3,308	3,973	4,694	5,473	6,308
	Multiple	426	660	942	1,271	1,646	2,066	2,532	3,042	3,597	4,196	4,837
	Min. End/Int. Brg [in]	1.5 / 3	1.5 / 3.5	2.5 / 5	3.4 / 6.6	4.4 / 8.6	5.6 / 10.7	6.8 / 13.1	8.1 / 15.7	9.6 / 18.5	11.2 / 21.5	12.9 / 24.8
30'	Simple	274	558	985	1,433	1,855	2,328	2,851	3,425	4,049	4,721	5,443
	Multiple	365	566	809	1,092	1,415	1,778	2,180	2,620	3,099	3,616	4,170
	Min. End/Int. Brg [in]	1.5 / 3	1.5 / 3.2	2.2 / 4.6	3.2 / 6.2	4.1 / 7.9	5.1 / 9.9	6.3 / 12.1	7.5 / 14.5	8.9 / 17.1	10.4 / 20	11.9 / 23

NOTES

- Span loads are limited by shear, moment, or deflection limits of L/240 for live load and L/180 for total load. The beam's self weight is included.
- Live load is considered to be 0.6 of the total load.
- Bearing lengths:
  - Bearing is required across the full width of the beam.
  - Bearing lengths shown are the minimum required at end and interior supports in inches.
  - Bearing lengths are based on the compressive strength, perpendicular-to-grain, of the beam material. Other bearing materials or design considerations may require longer bearing lengths.
- Table assumes:
  - Lateral support at each support and continuously along compression edges of the beam.
  - Load duration factor of 1.25.
  - Spans measured center-line to center-line of supports.
  - Maximum total length of 60'. Other sizes available, speak with your representative for assistance.
  - Unbalanced beams for simple and multiple spans, balanced beams can be calculated for multiple span conditions.
- For fire-resistent designs, use char rate calculation per the NDS. Contact Boise Cascade engineering for more information.
- Loads shown are intended for preliminary design purposes only. Analysis using appropriate software may result in higher allowable loads than shown.

Roof - Non-Snow Spans — 1.25 Load Duration [PLF]

Span	Span Type and Min. Bearing	12¼" (12.25") Width										
		Beam Depth										
		12" (12.00")	15" (15.00")	18" (18.00")	21" (21.00")	24" (24.00")	27" (27.00")	30" (30.00")	33" (33.00")	36" (36.00")	39" (39.00")	42" (42.00")
10'	Simple	5,769	8,825	12,487	16,746	21,570	26,480	32,373	38,122	38,113	38,104	38,095
	Multiple	4,438	6,792	9,613	12,562	15,205	18,180	19,021	19,012	19,003	18,994	18,985
	Min. End/Int. Brg [in]	3.6 / 7	5.6 / 10.7	7.9 / 15.2	10.6 / 19.8	13.6 /	16.7 / 28.7	20.4 / 30	24 / 30	24 / 30	24 / 30	24 / 30
12'	Simple	3,922	6,003	8,498	11,399	14,700	18,396	22,482	26,954	31,743	31,734	31,725
	Multiple	3,015	4,617	6,538	8,772	11,315	13,832	15,836	15,827	15,818	15,809	15,800
	Min. End/Int. Brg [in]	3 / 5.7	4.6 / 8.8	6.4 / 12.4	8.6 / 16.6	11.1 / 21.5	13.9 / 26.2	17 / 30	20.4 / 30	24 / 30	24 / 30	24 / 30
14'	Simple	2,828	4,331	6,133	8,229	10,615	13,287	16,240	19,473	22,982	26,766	27,175
	Multiple	2,171	3,328	4,715	6,329	8,166	10,223	12,498	13,552	13,543	13,534	13,525
	Min. End/Int. Brg [in]	2.5 / 4.9	3.8 / 7.4	5.4 / 10.5	7.3 / 14	9.4 / 18.1	11.8 / 22.6	14.4 / 27.7	17.2 / 30	20.3 / 30	23.6 / 30	24 / 30
16'	Simple	2,128	3,261	4,620	6,202	8,002	10,018	12,247	14,687	17,336	20,193	23,254
	Multiple	1,632	2,503	3,549	4,766	6,152	7,704	9,420	11,299	11,837	11,828	11,819
	Min. End/Int. Brg [in]	2.2 / 4.2	3.3 / 6.4	4.7 / 9	6.3 / 12.1	8.1 / 15.6	10.1 / 19.6	12.4 / 23.9	14.9 / 28.6	17.5 / 30	20.4 / 30	23.5 / 30
18'	Simple	1,577	2,536	3,596	4,829	6,233	7,805	9,544	11,447	13,514	15,742	18,131
	Multiple	1,266	1,945	2,760	3,708	4,788	5,998	7,336	8,801	10,392	10,501	10,492
	Min. End/Int. Brg [in]	1.8 / 3.7	2.9 / 5.6	4.1 / 7.9	5.5 / 10.7	7.1 / 13.7	8.9 / 17.2	10.9 / 21	13 / 25.1	15.4 / 29.7	17.9 / 30	20.6 / 30
20'	Simple	1,140	2,024	2,872	3,858	4,982	6,240	7,632	9,156	10,810	12,595	14,508
	Multiple	1,008	1,550	2,201	2,960	3,824	4,792	5,862	7,035	8,308	9,439	9,430
	Min. End/Int. Brg [in]	1.5 / 3.3	2.6 / 5	3.7 / 7.1	4.9 / 9.5	6.3 / 12.2	7.9 / 15.3	9.7 / 18.7	11.6 / 22.4	13.7 / 26.4	16 / 30	18.4 / 30
22'	Simple	848	1,649	2,341	3,147	4,065	5,093	6,231	7,477	8,830	10,289	11,853
	Multiple	819	1,261	1,792	2,411	3,117	3,908	4,783	5,741	6,782	7,904	8,561
	Min. End/Int. Brg [in]	1.5 / 3	2.3 / 4.5	3.3 / 6.4	4.4 / 8.5	5.7 / 11	7.1 / 13.8	8.7 / 16.8	10.5 / 20.2	12.3 / 23.8	14.4 / 27.7	16.5 / 30
24'	Simple	645	1,285	1,941	2,611	3,374	4,229	5,176	6,212	7,337	8,551	9,853
	Multiple	676	1,043	1,484	1,998	2,585	3,242	3,969	4,766	5,631	6,565	7,566
	Min. End/Int. Brg [in]	1.5 / 3	2 / 4.1	3 / 5.8	4 / 7.8	5.2 / 10	6.5 / 12.5	7.9 / 15.3	9.5 / 18.3	11.2 / 21.6	13.1 / 25.2	15 / 29
26'	Simple	500	1,001	1,633	2,197	2,841	3,563	4,361	5,236	6,186	7,210	8,309
	Multiple	566	875	1,246	1,679	2,174	2,728	3,341	4,013	4,743	5,531	6,376
	Min. End/Int. Brg [in]	1.5 / 3	1.7 / 3.8	2.8 / 5.3	3.7 / 7.1	4.8 / 9.2	5.9 / 11.5	7.3 / 14	8.7 / 16.8	10.3 / 19.8	12 / 23.1	13.8 / 26.5
28'	Simple	393	792	1,390	1,872	2,421	3,038	3,720	4,467	5,279	6,154	7,094
	Multiple	479	742	1,059	1,428	1,850	2,323	2,847	3,421	4,044	4,717	5,439
	Min. End/Int. Brg [in]	1.5 / 3	1.5 / 3.5	2.5 / 4.9	3.4 / 6.6	4.4 / 8.4	5.5 / 10.6	6.7 / 12.9	8 / 15.5	9.5 / 18.2	11 / 21.2	12.7 / 24.5
30'	Simple	313	636	1,122	1,611	2,085	2,617	3,206	3,851	4,552	5,309	6,120
	Multiple	410	636	909	1,227	1,591	1,999	2,451	2,946	3,484	4,065	4,689
	Min. End/Int. Brg [in]	1.5 / 3	1.5 / 3.2	2.2 / 4.5	3.2 / 6.1	4.1 / 7.8	5.1 / 9.8	6.2 / 12	7.4 / 14.3	8.8 / 16.9	10.2 / 19.7	11.8 / 22.7

NOTES

- Span loads are limited by shear, moment, or deflection limits of L/240 for live load and L/180 for total load. The beam's self weight is included.
- Live load is considered to be 0.6 of the total load.
- Bearing lengths:
  - Bearing is required across the full width of the beam.
  - Bearing lengths shown are the minimum required at end and interior supports in inches.
  - Bearing lengths are based on the compressive strength, perpendicular-to-grain, of the beam material. Other bearing materials or design considerations may require longer bearing lengths.
- Table assumes:
  - Lateral support at each support and continuously along compression edges of the beam.
  - Load duration factor of 1.25.
  - Spans measured center-line to center-line of supports.
  - Maximum total length of 60'. Other sizes available, speak with your representative for assistance.
  - Unbalanced beams for simple and multiple spans, balanced beams can be calculated for multiple span conditions.
- For fire-resistent designs, use char rate calculation per the NDS. Contact Boise Cascade engineering for more information.
- Loads shown are intended for preliminary design purposes only. Analysis using appropriate software may result in higher allowable loads than shown.

Boise Cascade® ENGINEERED WOOD PRODUCTS

Roof - Non-Snow Spans — 1.25 Load Duration [PLF]

Span	Span Type and Min. Bearing	14¼" (14.25") Width									
		Beam Depth									
		15" (15.00")	18" (18.00")	21" (21.00")	24" (24.00")	27" (27.00")	30" (30.00")	33" (33.00")	36" (36.00")	39" (39.00")	42" (42.00")
10'	Simple	10,110	14,307	19,186	24,738	30,803	37,659	44,346	44,335	44,325	44,315
	Multiple	7,782	11,014	14,613	17,687	21,148	22,126	22,116	22,105	22,095	22,085
	Min. End/Int. Brg [in]	5.5 / 10.6	7.8 / 14.9	10.4 / 19.8	13.4 / 24	16.7 / 28.7	20.4 / 30	24 / 30	24 / 30	24 / 30	24 / 30
12'	Simple	6,878	9,736	13,060	16,842	21,077	25,759	30,883	36,445	36,915	36,905
	Multiple	5,290	7,491	10,050	12,964	16,090	18,421	18,411	18,400	18,390	18,380
	Min. End/Int. Brg [in]	4.5 / 8.7	6.3 / 12.2	8.5 / 16.4	11 / 21.1	13.7 / 26.2	16.8 / 30	20.1 / 30	23.7 / 30	24 / 30	24 / 30
14'	Simple	4,961	7,026	9,428	12,162	15,222	18,606	22,311	26,332	30,667	31,612
	Multiple	3,812	5,402	7,251	9,356	11,713	14,319	15,764	15,754	15,743	15,733
	Min. End/Int. Brg [in]	3.8 / 7.3	5.4 / 10.3	7.2 / 13.8	9.3 / 17.8	11.6 / 22.3	14.1 / 27.2	16.9 / 30	20 / 30	23.3 / 30	24 / 30
16'	Simple	3,735	5,293	7,105	9,167	11,477	14,031	16,827	19,862	23,135	26,643
	Multiple	2,868	4,066	5,460	7,048	8,826	10,792	12,945	13,769	13,759	13,748
	Min. End/Int. Brg [in]	3.3 / 6.3	4.6 / 8.9	6.2 / 11.9	8 / 15.4	10 / 19.3	12.2 / 23.5	14.6 / 28.2	17.3 / 30	20.1 / 30	23.1 / 30
18'	Simple	2,906	4,119	5,532	7,140	8,942	10,934	13,115	15,482	18,036	20,773
	Multiple	2,228	3,161	4,248	5,485	6,871	8,404	10,083	11,906	12,215	12,205
	Min. End/Int. Brg [in]	2.9 / 5.5	4.1 / 7.8	5.4 / 10.5	7 / 13.5	8.8 / 16.9	10.7 / 20.7	12.9 / 24.8	15.2 / 29.2	17.7 / 30	20.3 / 30
20'	Simple	2,319	3,289	4,420	5,707	7,148	8,743	10,489	12,385	14,429	16,621
	Multiple	1,775	2,521	3,390	4,380	5,489	6,716	8,059	9,518	10,980	10,970
	Min. End/Int. Brg [in]	2.6 / 4.9	3.6 / 7	4.9 / 9.3	6.3 / 12	7.8 / 15.1	9.6 / 18.4	11.4 / 22.1	13.5 / 26	15.7 / 30	18.1 / 30
22'	Simple	1,889	2,681	3,605	4,656	5,835	7,138	8,566	10,116	11,787	13,579
	Multiple	1,444	2,053	2,762	3,570	4,476	5,479	6,576	7,769	9,055	9,959
	Min. End/Int. Brg [in]	2.3 / 4.4	3.3 / 6.3	4.4 / 8.4	5.6 / 10.8	7 / 13.6	8.6 / 16.6	10.3 / 19.9	12.2 / 23.4	14.2 / 27.3	16.3 / 30
24'	Simple	1,494	2,223	2,991	3,865	4,845	5,929	7,116	8,405	9,796	11,287
	Multiple	1,194	1,699	2,289	2,960	3,713	4,546	5,459	6,451	7,520	8,667
	Min. End/Int. Brg [in]	2 / 4	3 / 5.7	4 / 7.6	5.1 / 9.9	6.4 / 12.3	7.8 / 15.1	9.4 / 18.1	11.1 / 21.3	12.9 / 24.8	14.8 / 28.5
26'	Simple	1,164	1,870	2,517	3,254	4,081	4,995	5,997	7,086	8,260	9,518
	Multiple	1,001	1,427	1,923	2,489	3,124	3,827	4,597	5,433	6,336	7,304
	Min. End/Int. Brg [in]	1.7 / 3.7	2.7 / 5.2	3.6 / 7	4.7 / 9	5.9 / 11.3	7.2 / 13.8	8.6 / 16.5	10.1 / 19.5	11.8 / 22.7	13.6 / 26.1
28'	Simple	922	1,591	2,143	2,773	3,479	4,260	5,116	6,046	7,050	8,126
	Multiple	849	1,212	1,636	2,119	2,660	3,260	3,918	4,632	5,403	6,230
	Min. End/Int. Brg [in]	1.5 / 3.4	2.5 / 4.8	3.3 / 6.5	4.3 / 8.3	5.4 / 10.4	6.6 / 12.7	7.9 / 15.2	9.3 / 18	10.9 / 20.9	12.5 / 24.1
30'	Simple	740	1,306	1,845	2,388	2,997	3,672	4,411	5,214	6,081	7,010
	Multiple	728	1,040	1,405	1,822	2,289	2,807	3,374	3,991	4,656	5,370
	Min. End/Int. Brg [in]	1.5 / 3.2	2.2 / 4.5	3.1 / 6	4 / 7.7	5 / 9.6	6.1 / 11.8	7.3 / 14.1	8.6 / 16.7	10.1 / 19.4	11.6 / 22.3

NOTES

- Span loads are limited by shear, moment, or deflection limits of L/240 for live load and L/180 for total load. The beam's self weight is included.
- Live load is considered to be 0.6 of the total load.
- Bearing lengths:
  - Bearing is required across the full width of the beam.
  - Bearing lengths shown are the minimum required at end and interior supports in inches.
  - Bearing lengths are based on the compressive strength, perpendicular-to-grain, of the beam material. Other bearing materials or design considerations may require longer bearing lengths.
- Table assumes:
  - Lateral support at each support and continuously along compression edges of the beam.
  - Load duration factor of 1.25.
  - Spans measured center-line to center-line of supports.
  - Maximum total length of 60'. Other sizes available, speak with your representative for assistance.
  - Unbalanced beams for simple and multiple spans, balanced beams can be calculated for multiple span conditions.
- For fire-resistent designs, use char rate calculation per the NDS. Contact Boise Cascade engineering for more information.
- Loads shown are intended for preliminary design purposes only. Analysis using appropriate software may result in higher allowable loads than shown.

Allowable Axial Load [LBS]

Column Size	Load Duration	Column Length					
		10' (10.00')	12' (12.00')	14' (14.00')	16' (16.00')	18' (18.00')	20' (20.00')
5⅛" x 6" (5.125" x 6.00")	1.0 Floor	20,480	16,170	12,990	10,620	8,820	7,430
	1.15 Roof Snow	21,590	16,870	13,460	10,950	9,060	7,610
	1.25 Roof Non-Snow	22,230	17,280	13,720	11,140	9,200	7,720
8¾" x 9" (8.75" x 9.00")	1.0 Floor	84,670	76,790	68,390	60,110	52,480	45,920
	1.15 Roof Snow	94,200	84,120	73,710	64,020	55,410	48,190
	1.25 Roof Non-Snow	100,120	88,580	76,860	66,300	57,120	49,490
10¾" x 10½" (10.75" x 10.50")	1.0 Floor	128,820	119,910	109,580	99,020	88,770	79,220
	1.15 Roof Snow	144,730	133,210	120,200	107,240	95,025	84,120
	1.25 Roof Non-Snow	154,770	141,520	126,660	112,100	98,720	86,980
10¾" x 15" (10.75" x 15.00")	1.0 Floor	189,500	177,310	163,710	149,220	134,640	120,690
	1.15 Roof Snow	213,130	197,250	179,850	161,790	144,180	128,120
	1.25 Roof Non-Snow	228,070	209,730	189,670	169,210	149,800	132,440
12¼" x 12" (12.25" x 12.00")	1.0 Floor	172,740	162,390	151,370	139,910	128,230	116,740
	1.15 Roof Snow	195,190	181,930	168,020	153,590	139,180	125,460
	1.25 Roof Non-Snow	209,500	194,340	178,310	161,920	145,700	130,570
12¼" x 18" (12.25" x 18.00")	1.0 Floor	268,240	258,310	247,290	234,800	220,820	205,520
	1.15 Roof Snow	305,490	292,630	278,300	261,770	243,330	223,750
	1.25 Roof Non-Snow	329,870	314,870	297,880	278,470	256,880	234,510
14¼" x 15" (14.25" x 15.00")	1.0 Floor	256,710	245,900	234,400	222,030	209,170	195,910
	1.15 Roof Snow	291,830	278,030	263,380	247,680	231,380	214,740
	1.25 Roof Non-Snow	314,760	298,820	281,780	263,810	245,090	226,110
14¼" x 21" (14.25" x 21.00")	1.0 Floor	375,140	361,760	346,220	328,640	309,660	289,680
	1.15 Roof Snow	426,210	408,390	388,130	365,440	341,140	315,970
	1.25 Roof Non-Snow	459,380	438,740	414,620	388,420	360,420	331,710

NOTES

- Table assumes that column is braced at column ends only. Effective column length is equal to actual column length.
- Allowable loads are based on
  - One-piece column members used in dry service conditions.
  - An eccentricity value equal to 0.167 multiplied by the column thickness or width (worst case).
  - Axial loading columns using the design provisions of the National Design Specification for Wood Construction (NDS). For side or other combined bending and axial loads, use appropriate software to analyze such conditions.
  - Combination 3-Column Grade.
- See page 32 for reference design values.
- It may be possible to exceed the limitations of the table by analyzing a specific application with the use of an appropriate software program.
- Other sizes available, speak with your representative for assistance.
- For fire-resistant designs, use char rate calculation per the National Design Specification for Wood Construction (NDS). Contact Boise Cascade engineering for more information.

DETAILS & SPECIFICATIONS

Proper detailing and specifications contribute to an accurate and efficient construction process, simplify inspection, and help to ensure the overall success of a project. Following are examples of common details that represent just a few of Boise Cascade mass timber products. A complete line of written specifications and design details (in DWG, RVT, and PDF formats) are available for download on the resources page of our website.

P01 PANEL INSET SPLINE

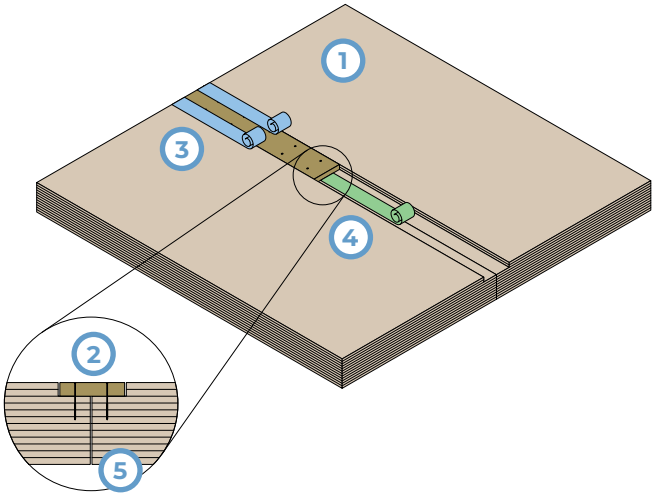

1. VLT Panel
2. Plywood Spline
3. Moisture Barrier Tape
4. Sound/Air Control Tape
5. Tolerance Gap

P02 PANEL SURFACE SPLINE

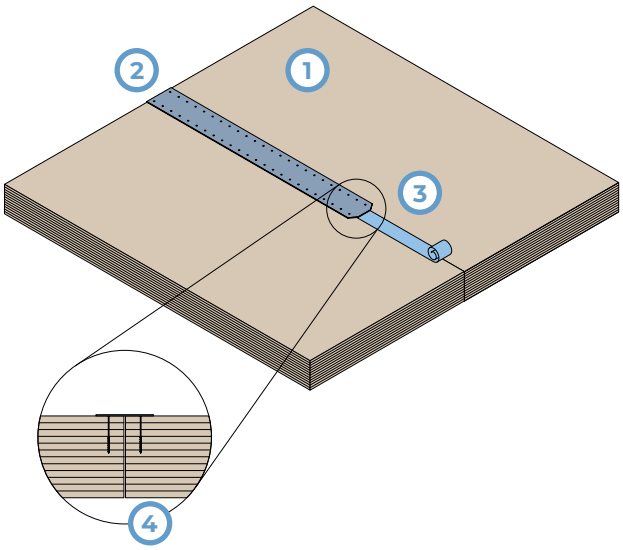

1. VLT Panel
2. Steel Surface Spline
3. Moisture Barrier Tape
4. Tolerance Gap

P03 PANEL LAP JOINT

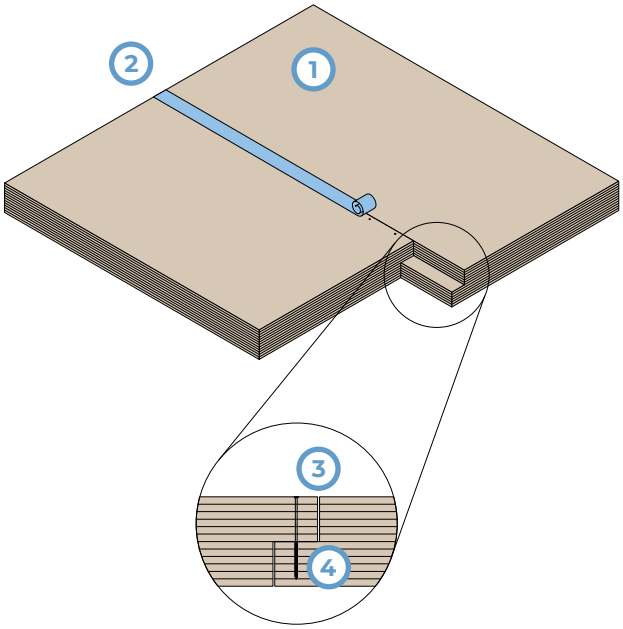

1. VLT Panel
2. Moisture Barrier Tape
3. Tolerance Gap
4. Panel Fastener

GA01 GENERAL ASSEMBLY

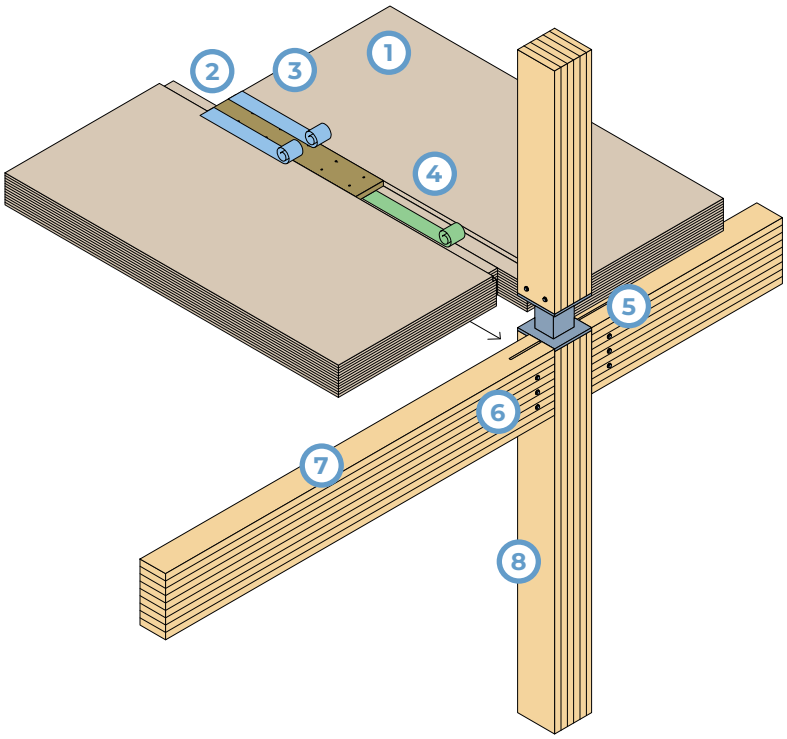

1. VLT Panel
2. Plywood Spline
3. Moisture Barrier Tape
4. Sound/Air Control Tape
5. Steel Column to Column Connection
6. Concealed Connector
7. LVL or Glulam Beam
8. LVL or Glulam Column

PB11 PANEL BEARING

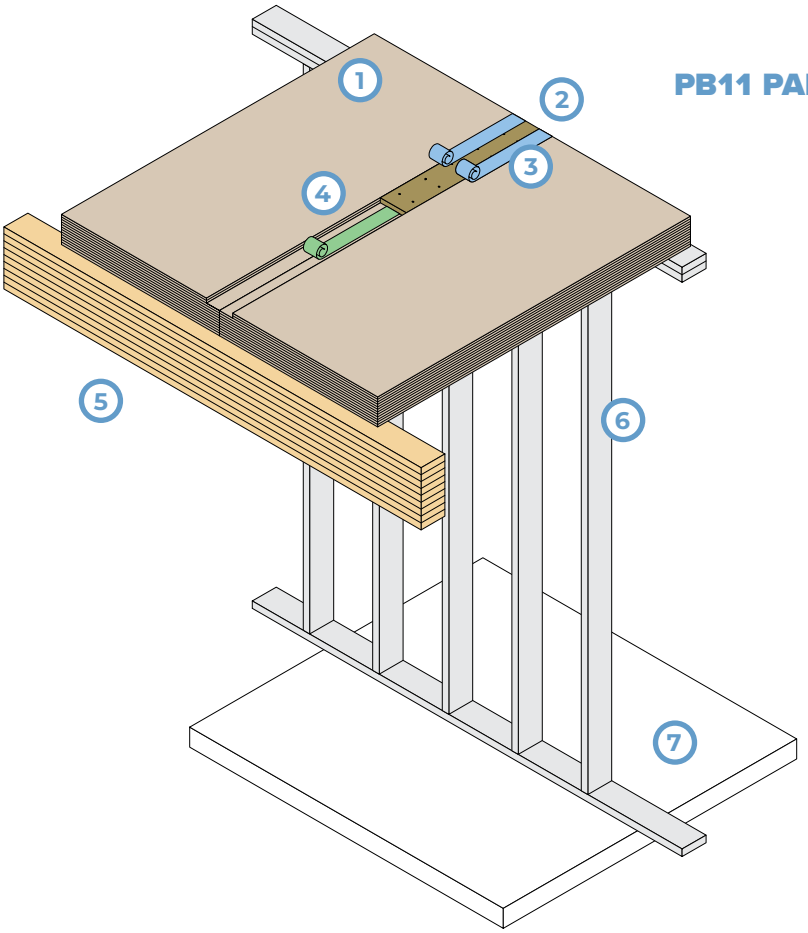

1. VLT Panel
2. Plywood Spline
3. Moisture Barrier Tape
4. Sound/Air Control Tape
5. LVL or Glulam Beam
6. 2x Bearing Wall
7. Bearing Surface

CRANE

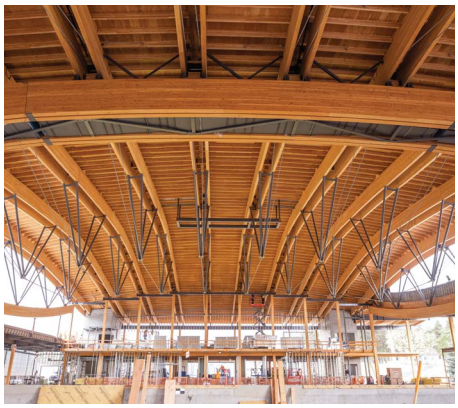

FIRE DETAILS

Designing a structure to resist fire is one of the most critical components of any building and we are dedicated to the safety of the people that occupy buildings constructed with wood materials.

As a leader in fire-related research in the wood industry, we have developed and tested many fire assemblies, even sharing successful designs with our competitors. Our commitment to fire safety continues with our mass timber product line.

VLT floor panels successfully passed ASTM E119 fire tests and can be used in designs—with or without a fire-rated gypsum-board ceiling—to help meet the fire-resistance requirements of Chapter 16 of the National Design Specification for Wood Construction (NDS). VLT panels have also passed the four-hour PRG-320 adhesive durability fire test.

Use the tested and approved fire-resistant assemblies illustrated in this section in your designs. If your project requires it, additional assemblies may be available, as well as project design assistance.

F02 FIRE ASSEMBLY

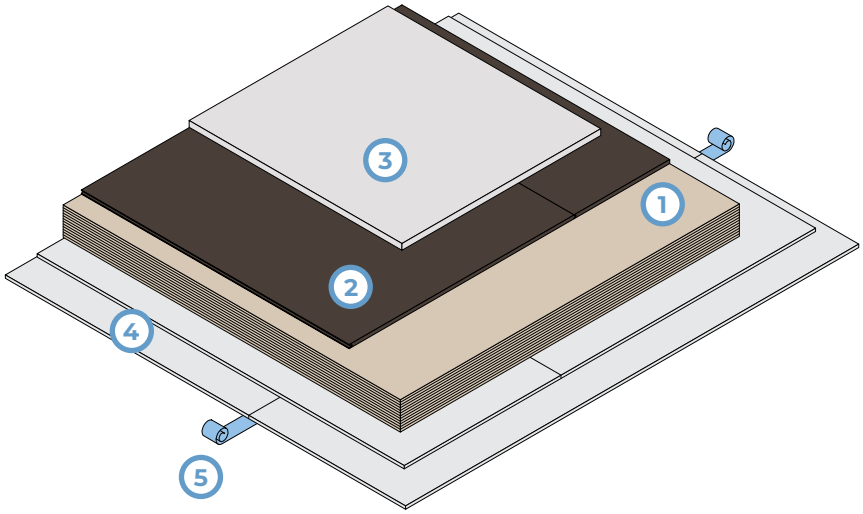

1. **VLT Panel**
2. **Sound Isolation Mat(s)**
3. **Concrete Topping**
4. **Direct Applied Ceiling**
5. **Gypsum Board Tape**

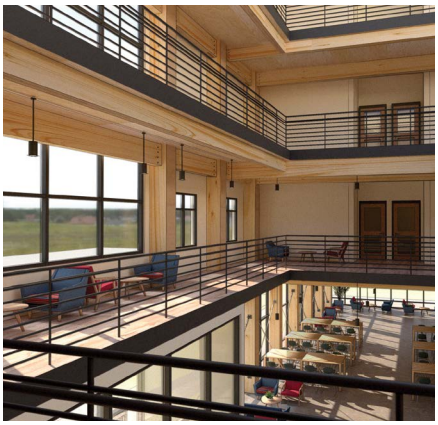

SOUND DETAILS

Sound transmission levels throughout a building are an important aspect of user satisfaction and comfort. To ensure buildings uniformly meet expectations, sound transmission class (STC) ratings for airborne sounds and impact insulation class (IIC) ratings for impact sounds were developed. The International Building Code (IBC) requires minimum STC and IIC ratings based on building type and location. For assemblies that separate dwellings from another or from public areas, STC and IIC ratings of 50 are required, though it is common for architects to specify significantly higher ratings.

VLT panels provide an excellent base for sound-resistance assemblies. Boise Cascade works with leading manufacturers of floor acoustic components to test sound insulating floor-ceiling assemblies with VLT panels. Our assemblies provide a wide range of sound ratings from code-minimum to luxury and include “one-sided” assemblies that allow for the natural beauty of the wood to be exposed on one side.

S10 SOUND ASSEMBLY

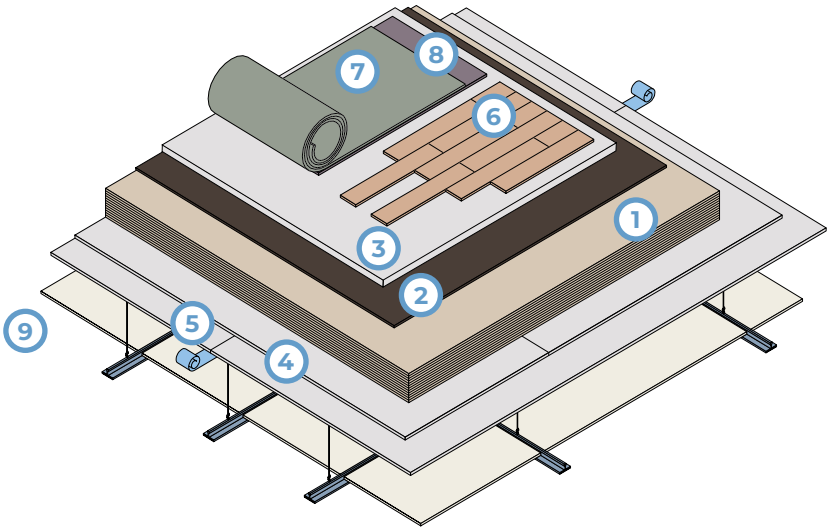

1. **VLT Panel**
2. **Sound Isolation Mat(s)**
3. **Concrete Topping**
4. **Direct Applied Ceiling**
5. **Gypsum Board Tape**
6. **LVT Floor Covering**
7. **Carpet**
8. **Pad**
9. **Suspended Ceiling**

STORAGE AND HANDLING

Boise Cascade mass timber products are designed for dry-use conditions only. Dry-use conditions include dry, covered, well-ventilated interior conditions where equivalent moisture content of the product will not exceed 16%. For mass timber products to perform as intended, it is important to properly store and handle them. Ensure mass timber products, like all wood products, are dry and in good condition during storage and at time of installation. Water damaged, cracked, decayed, or otherwise compromised products may not be suitable for use. Avoid damage by following these guidelines:

- Store flat on a level surface.
- Avoid ground contact. Place material on lumber blocking, skids, or a rack system.
- Leave product wrap in place to protect from moisture, soiling, sunlight, and scratches.
- For more information regarding storage and handling, see resources on our website.

Limited Lifetime Warranty

Boise Cascade VLT Panels, LVL Beams and Columns, and Glulam products are covered by a limited lifetime warranty for the expected life of the structure.

View the complete warranty (including limitations and exclusions): bc.com/terms-conditions

COF

Proud to be part of the organizations
propelling the mass timber movement forward.

bc.com
833.769.0257

MAS-5201 REV 12/2025
Boise Cascade, BOISE GLULAM, BC Calc, BCI, Versa-Lam, and Versa-Stud are registered trademarks of Boise Cascade Company or its affiliates. © 2025 Boise Cascade Company. All rights reserved.

Boise Cascade®
ENGINEERED WOOD PRODUCTS